UC-NRLF
$B 46 273

PRACTICAL WIRELESS TELEGRAPHY

BY ELMER E. BUCHER

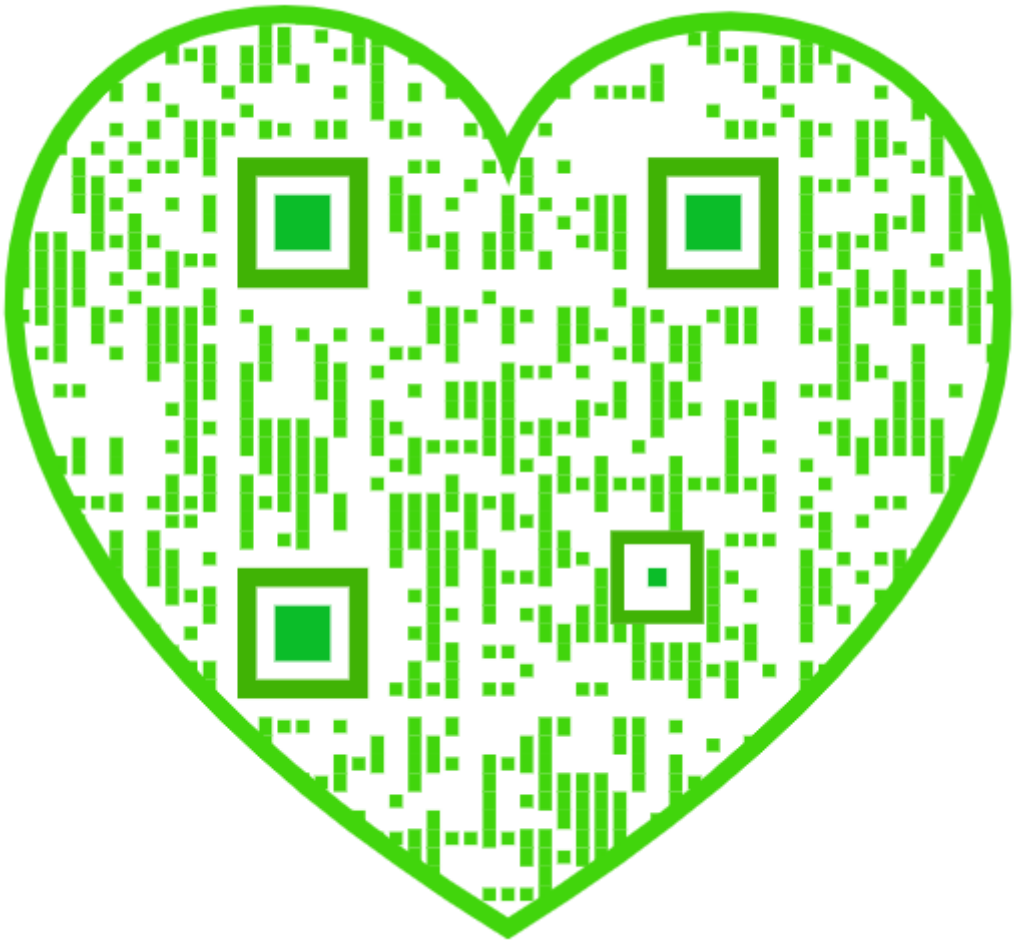

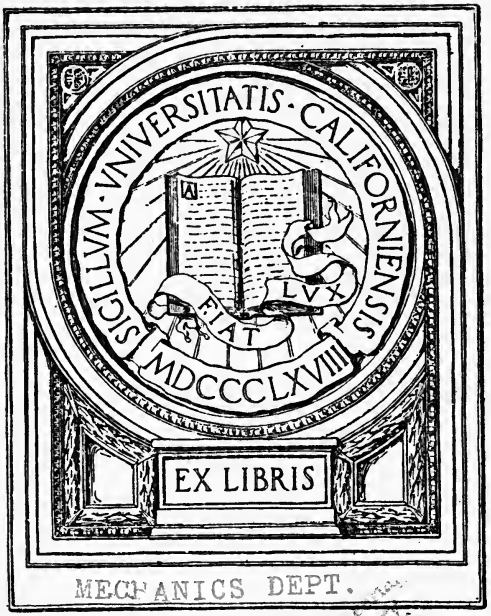

MECHANICS DEPT.

Practical Wireless Telegraphy

A COMPLETE TEXT BOOK *for* STUDENTS *of* RADIO COMMUNICATION

BY

ELMER E. BUCHER

Instructing Engineer

Marconi Wireless Telegraph Co. of America

Member Institute of Radio Engineers

Fully Illustrated

Revised Edition

5000 copies printed July, 1917
5000 copies printed October, 1917
5000 copies printed February, 1918
5000 copies printed March, 1918
5000 copies printed May, 1918
5000 copies printed June, 1918

25 ELM ST. WIRELESS PRESS INC. NEW YORK

TK5741
B85
1918

Engineering
Library

UNIV. OF
CALIFORNIA

MECHANICS DEPT.

COPYRIGHT, 1917
BY
WIRELESS PRESS, INC.

AUTHOR'S NOTE

In preparing this volume, the author has endeavored to give the non-technical student and the practical telegraphist an understanding of the functioning of present day commercial wireless telegraph apparatus, and he has varied the usual procedure followed in text books by covering first in a general way the fundamentals of electricity, electromagnetic induction, the dynamo, the motor, the motor generator, storage batteries, charging panels, etc., a knowledge of which is quite as essential to the practical wireless worker as the more complicated phenomena of radio-frequency circuits.

It was not possible in the space available to treat the elements of electricity and magnetism in detail, but an effort was made to cover some of the more important principles to prepare the student to understand the functioning of radio telegraph apparatus.

As in the case of the ordinary electrician working in the more common branches of electrical practice, one of the first essentials in training a wireless telegraphist in the practical operation of a radio set is to instil in his mind a thorough understanding of electrical circuits, i. e., the wiring of electrical apparatus, for only as this all important knowledge is assimilated is the learner qualified to take charge of a commercial wireless station; hence this book is largely devoted to describing the circuits of practical radio sets together with a simple explanation of the basic principles of the apparatus associated therewith.

No attempt therefore has been made to treat the subject with rigid scientific accuracy or completeness. The idea has been rather to show the student what the apparatus consists of and how it is manipulated. Only general notions of how and why it operates are presented and neither completeness of treatment nor rigidly scientific as distinguished from popular and non-technical use of terms have been attempted.

In selecting the apparatus to be described the author has chosen that which is most widely in commercial use and such other apparatus as is of general interest. In line with this policy, systems using radio frequency alternating and direct current arc transmitters have been treated and chapters on undamped oscillation receivers and Marconi trans-oceanic wireless telegraph apparatus have been included.

The attention of prospective wireless operators is directed to the series of questions in the Appendix (Section F), which bear particularly on the salient points of a practical operator's course and which were prepared as a guide for the beginner to qualify him to take the examination for a Government license certificate.

The student who has knowledge of electrical circuits and requires instruction only in the details of commercial wireless apparatus is advised to read Chapters Four to Twelve inclusive, but those who only require a working knowledge of the ship apparatus used in the American Marconi Company's service are directed to Chapters Nine and Twelve.

One of the first questions often asked by a beginner who has had no previous electrical training or experience is "What is the object of the study of the elements of electricity and magnetism" or "Why is such instruction required previous to taking up the subject of wireless apparatus proper?"

To this it may be answered that the functioning of wireless telegraph apparatus is based upon fundamental electrical and magnetic principles and consequently, when the simple laws of the magnet and electrical currents are thoroughly understood the ground is at least two-thirds gone over. The primary object of the elementary work is to prepare the student step by step to understand the apparatus for the production of radio-frequent currents—the currents of extremely high frequency by which the electric waves of wireless telegraphy are set into motion. The second object is to explain and describe the apparatus by which the energy of these currents can be radiated in the form of electric waves and detected at a distant receiving station, and to explain the apparatus by which such currents are finally made audible in a telephone receiver or some sort of telegraphic recording apparatus.

The author desires to acknowledge his indebtedness to the Marconi Wireless Telegraph Co. of America, the Crocker-Wheeler Manufacturing Co. and the Electric Storage Battery Company for the loan of photographs, cuts, blue prints, wiring diagrams and literature which have greatly assisted in the preparation of this work. He has also freely consulted the columns of the Wireless Age and the Proceedings of the Institute of Radio Engineers.

E. E. B.

New York City, N. Y.

735783

CONTENTS

PART I.

MAGNETISM.

THE MAGNETIC CIRCUIT.

Page

1. Natural Magnet. 2. Flux. 3. Polarity. 4. Magnetic Induction. 5. Permanent and Temporary Magnets. 6. Laws of Magnetic Poles. 7. Magnetic Circuit..... 1

PART II.

THE PRODUCTION OF ELECTROMOTIVE FORCE.

ELECTRIC CURRENT AND CIRCUITS.

8. Electrical Current. 9. Classification of Currents. 10. Electromotive Force. 11. Conductors and Insulators. 12. Production of Electromotive Force. 13. Electricity by Friction (Static Electricity). 14. Electricity by Chemical Action (Primary or Secondary Batteries). 15. Secondary Cell. 16. Current Strength and Quantity. 17. Electrical Resistance. 18. Grouping of Electrical Cells. 19. Ohm's Law and Practical Application. 20. Divided Circuits. 21. Electrical Work. 22. Electrical Horsepower. 23. Definition of Electrical Units. 24. Current Output and Voltage of Various Current Sources..... 4

PART III.

ELECTROMAGNETIC INDUCTION.

THE DYNAMO—THE FLOW OF ALTERNATING CURRENT.

25. Electromagnetism. 26. Magnetic Field About Two Parallel Conductors. 27. The Solenoid. 28. Induced Currents. 29. Mutual Induction. 30. Self-Induction. 31. Value of Induced E. M. F. 32. The Dynamo. 33. Determination of Frequency. 34. Strength of Magnetic Field. 35. Diagram of an Alternating Current Dynamo. 36. Direct Current Dynamo. 37. Shunt, Series and Compound Wound Dynamos. 38. The Electric Motor. 39. The Effect of Counter Electromotive Force. 40. Motor with Differential Field Winding. 41. Dynamo and Motor Armatures. 42. Development of Armature Windings. 43. The Alternating Current Transformer. 44. Electrostatic Capacity. 45. Reactance and Impedance. 46. Capacity Reactance. 47. Lag and Lead of Alternating Current. 48. Effective Value of Alternating E. M. F. and Current. 49. Measuring Instruments or Electric Meters. 50. Induction Coil. 51. Practical Electric Circuits. 16

PART IV.

MOTOR GENERATORS.

HAND AND AUTOMATIC MOTOR STARTERS.

52. The Motor Generator. 53. Field Rheostats. 54. Dynamotor and Rotary Converter. 55. The Motor Starter. 56. Automatic Motor Starters. 57. Protective Condensers. 58. Care of the Motor Generator. 59. How to Remove Motor Generator Armature..... 51

PART V.

STORAGE BATTERIES AND CHARGING CIRCUITS.

60. The Necessity for a Storage Battery in a Radio Installation. 61. General Construction and Action. 62. The Charging Process. 63. The Fundamental Actions of a Storage Cell. 64. The Electrolyte. 65. The Hydrometer. 66. How the Capacity of a Storage Cell is Rated. 67. Fundamental Facts Concerning the Storage Cell. 68. How to Charge a Storage Cell. 69. How to Determine the Value of the Charging Resistance. 70. Lamp Bank Resistance. 71. The Use of the Ammeter and the Underload Circuit Breaker. 72. The Ampere Hour Meter. 73. Overcharge. 74. How to Charge a Battery When the Voltage Exceeds That of the Charging Generator. 75. How to Determine the Polarity of the Charging Generator. 76. Determination of the State of Charge and Discharge of a Battery. 77. Keeping the Level of the Electrolyte. 78. Protecting the Cells from Acid Spray. 79. General Instructions for the Portable Chloride Type of Accumulators. 80. General Operating Instructions for the Exide Cell. 81. The Edison Storage Battery. 82. The Charge and Discharge of the Edison Cell..... 67

PART VI.

THE RADIO TRANSMITTER.

CONDENSERS—OSCILLATION GENERATORS—RADIATION OF ELECTRICAL WAVES—DAMPING OF OSCILLATIONS.

Page

83. Methods of Generating Radio Frequency Current. 84. The Condenser. 85. Connections for Condensers. 86. How to Place a Charge in a Condenser. 87. Analysis of a Spark Discharge. 88. Effect of Resistance on Oscillations. 89. Electrical Resonance. 90. The Open Circuit Oscillator. 91. The Length of the Electric Wave. 92. The Determination of Wave Length From the Inductance and Capacity. 93. Logarithmic Decrement of the Oscillations. 94. Methods of Exciting Oscillations in an Aerial. 95. The Reaction of Coupled Circuits. 96. The Standard Waves of Commercial Wireless Telegraphy. 97. Fundamental Circuit of a Complete Radio Transmitter. 98. Simple Explanation of the Circuits. 99. Numerical Values for a Standard Radio Set..... 80

PART VII.

APPLIANCES FOR A RADIO TRANSMITTER.

SPARK DISCHARGERS—OSCILLATION TRANSFORMERS—CONDENSERS—TRANSFORMERS.

100. In General. 101. Spark Dischargers for Radio Telegraphy. 102. Adjustment of the Spark Note. 103. Oscillation Transformers. 104. Aerial Tuning Inductance. 105. The Short Wave Condenser. 106. High Potential Condensers. 107. High Frequency "Choking" Coils. 108. High Voltage Transformers. 109. Reactance Regulators. 110. Aerial Changeover Switch. 111. Transmitting Keys 101

PART VIII.

AERIALS OR ANTENNAE.

112. Function of the Aerial. 113. Determination of the Wave Length From the Dimensions of an Aerial. 114. Fundamental Considerations. 115. Various Types of Aerials. 116. Directional Aerials. 117. Standard Marconi Aerial. 118. The Deck Insulator. 119. Installation of the Aerial. 120. Earth Connection. 121. Radiation. 122. Antenna Decrement. 123. Transmission Range. 116

PART IX.

RECEIVING CIRCUITS, DETECTORS AND TUNING APPARATUS.

STANDARD MARCONI RECEIVING SETS.

124. In General. 125. The Problem. 126. Simple Receiver. 127. The Inductively Coupled Receiver. 128. Other Methods of Coupling. 129. The Carborundum Detector and Tuning Circuits. 130. Adjustment of the Inductively Coupled Tuner. 131. The Action of the Carborundum Crystal. 132. Adjustment of Crystal Detectors. 133. Detector Holders. 134. Classification of the Receiving Detectors. 135. Fleming Valve Detector and Tuning Circuits. 136. Marconi Type 107-A Tuner. 137. Marconi Magnetic Detector and the Multiple Tuner Circuits (English Marconi Company). 138. The Marconi Type 106 Receiving Tuner. 139. Marconi Receiving Tuner Type 101 (American Marconi Company). 140. The Marconi Universal Receiving Set (English Marconi Company). 141. Electrolytic Detector. 142. The Three Element Valve Detector. 143. A Repeater Vacuum Valve Circuit. 144. The Vacuum Valve Amplifier. 145. Amplification of Radio Frequencies. 146. The Effects of Distributed Capacity. 147. The "End Turns" of a Receiving Tuner and End Turn Switches. 148. The Variation of a Radio Frequency Inductance. 149. Buzzer Excitation Systems. 150. Receiving Telephones. 151. Microphonic Relays or Sound Intensifiers. 152. Brown Amplifying Relay. 153. Atmospheric Electricity. 154. The Marconi Balanced Crystal Receiver (English Marconi Company). 155. Type I Aerial Changeover Switch. 156. Marconi Type 112 Receiving Tuner. 156A. General Advice for the Manipulation of a Receiving Tuner..... 129

PART X.

AUXILIARY APPARATUS OR EMERGENCY TRANSMITTERS.

157. Statute Requirements. 158. Tuned Coil Set. 159. The Electric Storage Battery Company's Accumulators and Charging Panel..... 179

PART XI.

PRACTICAL RADIO MEASUREMENTS.

MEASUREMENT OF WAVE LENGTH—DECREMENT—CALIBRATION—TRANSMITTING AND RECEIVING APPARATUS.

Page

160. The Importance of Electrical Resonance. 161. Indicators of Resonance. 162. Uses of the Wavemeter. 163. Simple Use of the Wavemeter. 164. General Instructions for Tuning a Radio Transmitter. 165. Tuning by the Hot Wire Ammeter. 166. Tuning the 2 K. W. 500 Cycle Panel Transmitter. 167. Determination of Coupling. 168. Plotting of Resonance Curves. 169. Measurement of the Logarithmic Decrement of Damping. 170. Calculation of the Decrement of the Wavemeter (or Decremeter). 171. Wavemeter as a Source of High Frequency Oscillations. 172. Calibration of the Secondary and Primary Circuits of a Receiving Tuner. 173. Calibration of the Open and Closed Circuits Simultaneously. 174. Measurement of the Natural Oscillating Period of a Coil. 175. Measurement of Electrostatic Capacity. 176. Measurement of the Effective Inductance of a Coil at Radio Frequencies. 177. Calculation of Inductance from the Constants of the Coil. 178. Measurement of the Effective Inductance and Capacity of an Aerial. 179. Calibration of a Wavemeter from a Standard. 180. Measurement of Mutual Inductance at Radio Frequencies. 181. Comparative Measurement of the Strength of Incoming Signals. 182. "Tight" and "Loose" Coupling. 183. Measurement of High Voltages. 184. Tuning and Adjustment Record..... 188

PART XII.

STANDARD MARINE SETS OF THE AMERICAN MARCONI COMPANY.

PANEL TRANSMITTERS—COMPOSITE TRANSMITTERS.

185. Panel Transmitters. 186. Details of Type P-4 Panel. 187. Description of Apparatus. 188. Complete Adjustment of Type P-4 Set. 189. Type P-5 Panel Transmitter. 190. Description of Apparatus. 191. Complete Adjustment of the Type P-5 Set. 192. How to Remove the Armature of the ½ K. W. Motor Generator. 193. The 1 K. W. Non-Synchronous Discharger Transmitter. 194. Description of the Set. 195. Installation. 196. Adjustment of the 1 K. W. Set. 197. Type "E-2". One-half Kilowatt, 120 Cycle Panel Transmitter. 198. Details of the Circuits and Apparatus. 199. General Instructions for Tuning and Adjusting. 200. Marconi 2 K. W. 240 Cycle Transmitter. 201. Type P-9 ¼ K. W. Cargo Transmitting Set. 202. Aerial Current and Reduction of Power. 203. General Instructions for the Panel Sets 223

PART XIII.

MARCONI DIRECTION FINDER OR WIRELESS COMPASS AND ITS APPLICATION.

204. In General. 205. Description of Equipment. 206. The Direction Finder Aerials. 207. The Circuit Complete. 208. The Tuned Buzzer Tester. 209. How Current is Induced in the Looped Aerials. 210. Direction of Magnetic Forces Within the Goniometer. 211. General Instructions for Operation of the Direction Finder. 212. To find the Direction of a Radio Station..... 255

PART XIV.

TRANSMITTERS OF UNDAMPED OSCILLATIONS.

ARC GENERATORS—RADIO-FREQUENCY ALTERNATORS—PLIOTRON OSCILLATOR.

213. In General. 214. The Arc Generator. 215. Signalling with the Arc Transmitter. 216. The Alexanderson High Frequency Alternator. 217. Goldschmidt Radio-Frequency Alternator. 218. The Joly System for the Protection of Undamped Oscillations. 219. Marconi's System for the Production of Continuous Waves. 220. The Pliotron Oscillator..... 264

PART XV.

RECEIVERS FOR UNDAMPED OSCILLATIONS OR CONTINUOUS WAVES.

221. The Problem. 222. The Tikker. 223. The Heterodyne System. 224. The Vacuum Valve as a Source of Radio-Frequency Oscillations. 225. Vacuum Valve as a Combined Detector, Amplifier and Beat Receiver. 226. Oscillating Vacuum Valve Detector Circuits of the U. S. Navy. 227. The Goldschmidt Tone Wheel. 228. Marconi System for Reception of Undamped Oscillations. 277

PART XVI.

MARCONI TRANSOCEANIC RADIO TELEGRAPHY.

229. Marconi Development and General Considerations. 230. Marconi's Duplex System. 231. The Balancing Out Aerial. 232. Glace Bay-Clifden Stations. 233. Marconi Directional Aerial. 234. Marconi Transoceanic Stations. 235. Marconi Tubular Masts. 236. Radio-Frequency Circuits of the Damped Wave Transmitters. 237. Other U. S. High Power Stations. 238. Long Distance Receiving Sets. 239. Condensed List of High Power Stations..... 288

PART XVII.

LOCATION OF TROUBLE—MAINTENANCE—REPAIRS.

240. In General. **241.** General Precautions. **242.** Makeshift Testing Apparatus. **243.** Checking Up the Transmitter. **244.** The Faults of the Transmitter. **245.** Possible Faults of the Motor Generator. **246.** Trouble in the Receiving Apparatus. **247.** Improvised Transmitters and Receivers.

APPENDIX.

Section A. Complete Data for Standard Marine Commercial Sets. **Section B.** Wave Length Range of Marconi Receiving Tuners. **Section C.** Correction Factor for Formula. **Section D.** Inductivity Values for Different Dielectrics. **Section E.** Conversion of $\lambda = \frac{V}{N}$ to $\lambda = 59.6 \sqrt{L C}$. **Section F.** Part I—Magnetism. Part II—Elementary Electricity and Simple Circuits. Part III—Electromagnetism; Electromagnetic Induction; Electrical Measuring Instruments; The Flow of Alternating Current. Part IV—Motor Generators and an Automatic Motor Starter. Part V—Storage Batteries. Part VI—Condensers, Oscillation Generators and Radio Transmitters. Part VII—Appliances for the Radio Transmitter. Part VIII—Aerials or Antennæ. Part IX—Receiving Apparatus. Part X—Emergency Apparatus and Auxiliary Transmitters. Part XI—Practical Radio Measurements. Part XII—Marconi Transmitters. Part XIII—Marconi Direction Finder. Part XIV—Undamped Oscillation Generators. Part XV—Receivers of Undamped Oscillations; Location of Trouble; International Regulations and U. S. Laws and Regulations. **Section G.** The Relation of Spark Gap Action to Coupling and Purity of the Radiated Wave. **Section H.** Important Remarks on the Design, Adjustment and Use of Receiving Transformers. **Section I.** Phase Relation of Currents in Balancing-out Aerial. **Section J.** ½ K. W. Motor Starter.

Practical Wireless Telegraphy

PART I.

MAGNETISM.

THE MAGNETIC CIRCUIT.

1. Natural Magnet. 2. Flux. 3. Polarity. 4. Magnetic Induction. 5. Permanent and Temporary Magnets. 6. Laws of Magnetic Poles. 7. Magnetic Circuit.

Because the flow of an electrical current is invariably accompanied by a magnetic field, a brief explanation of the phenomena surrounding the simple bar magnet will be given. This is to be followed in a successive chapter by a description of the electromagnet.

1. Natural Magnet.—A substance which has the property of attracting bits of iron or steel is called a *magnet*. Natural magnets found in various parts of the earth are known as *lodestone* and a piece of lodestone dipped into a pile of iron or steel filings exhibits this property of attraction to a considerable degree.

If a bar of hard steel be rubbed with a piece of lodestone the steel is found to be magnetized and is then known as an *artificial magnet*. If the same bar is dipped into a pile of iron filings, the majority of the filings cling to the tips of the bar, there being no tendency towards attraction at the center. Since the strongest magnetism exists at the ends of the bar, these ends are known as the *poles* of the magnet.

2. Flux.—If a piece of paper, over which iron filings have been sprinkled, is placed above and parallel to a bar magnet, the filings will arrange themselves into a series of well defined lines as in Fig. 1. These may be said to show the general direction of the magnetic force. These lines indicate that the space about the poles of a magnet is in a state of stress or strain, and therefore, they are called the *magnetic lines of force* or simply lines of force. The space subjected to this strain is called the magnetic field and the total lines of force crossing a given space or field are termed the *magnetic flux*.

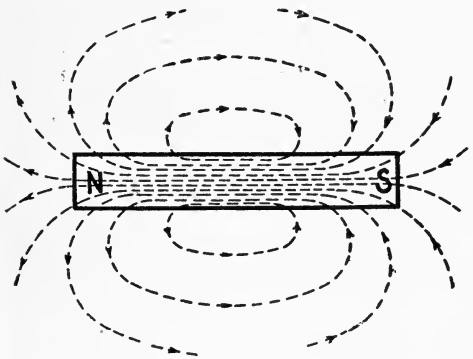

Fig. 1—Field of a Simple Bar Magnet.

3. Polarity.—A magnetic needle suspended or pivoted as in a compass and left to swing freely will, as is well known, point in the direction of the north magnetic pole. The end which points in that direction is known as the *north pole* of the magnet and the opposite end, the south pole.

4. Magnetic Induction.—A piece of soft iron placed in the magnetic field of another magnet, becomes temporarily magnetized and will have two unlike poles. Magnetism thus induced in a piece of soft iron is said to be due to *magnetic induction.* If, for example, the north pole of a steel bar magnet be placed near to a bar of soft iron, the end of the iron bar nearest to the magnet will exhibit *south* magnetism and the opposite end *north* magnetism. It should be understood that magnetism can be induced in the iron bar whether in direct contact with the inducing magnet or slightly separated from it but when the exciting magnet is removed, the induced magnetism will practically disappear.

5. Permanent and Temporary Magnets.—Because a bar of soft iron retains its magnetism only while under the influence of a given magnetizing force it is called a *temporary magnet.* On the other hand a piece of steel, when once magnetized, retains its magnetism permanently, and thereafter is known as a *permanent magnet.*

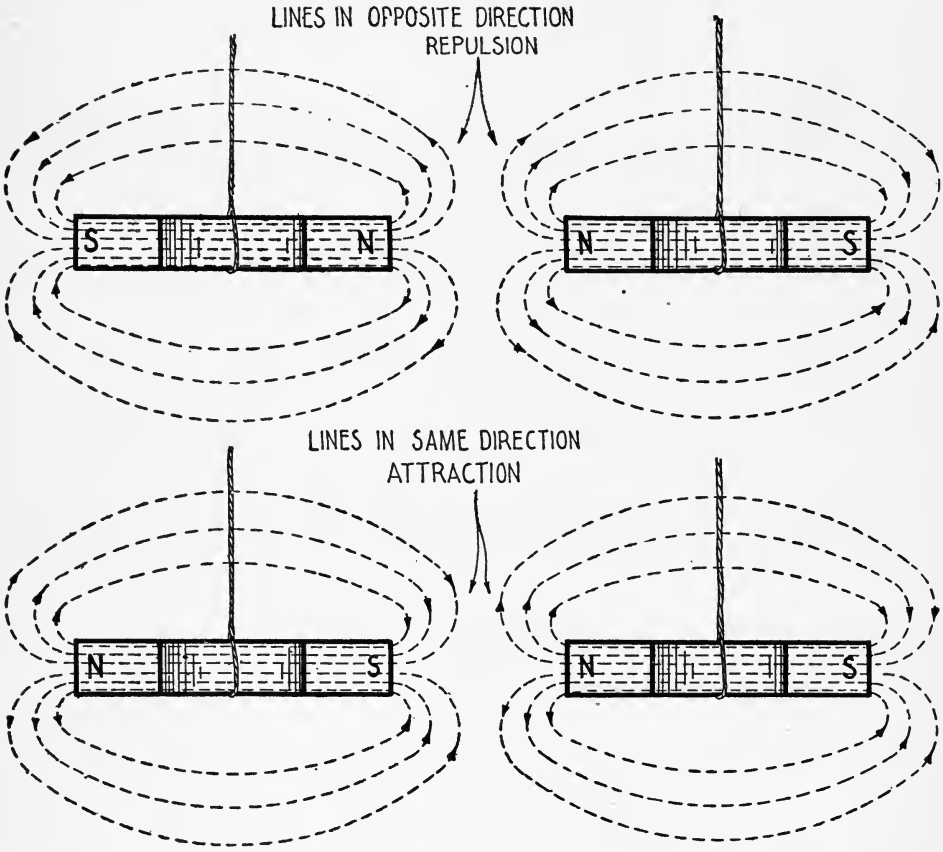

Fig. 2—Diagram Showing the Attraction and Repulsion of Magnetic Fields.

The power of steel to resist magnetization and once in this condition to resist demagnetization is termed its *retentivity.* Steel possesses greater retentivity than iron because, as previously mentioned, soft iron becomes saturated with magnetism very quickly and loses it almost immediately when the inducing magnetic field is removed.

The capability of any substance for conducting magnetic lines of force is termed its *permeability.* Iron, for instance, possesses much greater permeability

than steel and steel possesses greater permeability than air. This means that if the circuit for the magnetic lines of force from pole to pole of a magnet is completed through an iron core, a greater number of lines of force will pass than if the circuit were completed through a piece of steel or through air.

6. Laws of Magnetic Poles.—If two bar magnets are suspended by a cord as in Fig. 2, and the north pole of one brought near to the north pole of the other, they will be found to repel. On the other hand, if the south pole of a bar magnet is brought near to the north pole of another magnet, they are found to attract one another. The foregoing actions may be summed up by the fundamental law: *Like magnetic poles repel, unlike magnetic poles attract.*

A variation of this law is encountered when a very strong south pole, let us say, is placed near a weak south pole. The stronger magnet will attract the weaker one because of its over-powering field. Similar effects are observed between two north poles of dissimilar strength.

7. Magnetic Circuit.—Each line of force of a magnet (as in Fig. 1) is assumed to pass from the south pole to the north pole, through the bar and from the north to the south pole outside the bar. This is said to be the direction of the lines of force and the path they take is called the *magnetic circuit.* Such a circuit is usually made up of magnetic material like iron or steel but in commercial apparatus very often one or more air gaps are included in the path of the flux.

If a magnetic substance such as a bar of iron is suspended free to move in a magnetic field, it will tend to turn and lie parallel with the field, or, as is more often said, will take such a position as to accommodate through itself the greatest number of lines of force. On the other hand, if a permanent magnet is suspended free to move in a magnetic field of definite direction (such as suspending a bar magnet above a stationary magnet) it will tend to take a parallel position with the field but in a particular direction, that is, its internal lines of force will be in the same direction as those of the field.

Advantage of this fundamental principle is taken in the design of many electromagnetic devices and in electrical measuring instruments to be described later on.

Powerful magnetic fields may be created by an electric current. Magnetism so produced is known as electromagnetism. The great advantage of the electromagnet is the fact that the strength of the magnetic field can always be controlled, whereas the field of the permanent magnet is more or less of fixed strength. Electromagnetism will be taken up in its proper order in a following chapter.

PART II.

THE PRODUCTION OF ELECTROMOTIVE FORCE.

ELECTRIC CURRENT AND CIRCUITS.

8. Electrical Current. 9. Classification of Currents. 10. Electromotive Force. 11. Conductors and Insulators. 12. Production of Electromotive Force. 13. Electricity by Friction (Static Electricity). 14. Electricity by Chemical Action (Primary or Secondary Batteries). 15. Secondary Cell. 16. Current Strength and Quantity. 17. Electrical Resistance. 18. Grouping of Electrical Cells. 19. Ohm's Law and Practical Application. 20. Divided Circuits. 21. Electrical Work. 22. Electrical Horsepower. 23. Definition of Electrical Units. 24. Current Output and Voltage of Various Current Sources.

8. Electrical Current.—When we speak of a current of electricity as flowing through a wire or circuit we simply express in a convenient way certain phenomena associated therewith. We do not, in fact, know what actually transpires in the transfer of electricity from point to point in a conductor. Electricians generally agree that a so-called "current" of electricity flows in a definite direction throughout a given circuit, but there is no direct evidence at hand to prove the actual existence of a "current", in the commonly accepted meaning of the word. The term, however, is universally adopted to designate the flow of electricity from point to point in an electrical circuit.

9. Classification of Currents.—Electrical currents are called *direct* if they flow in one direction throughout a given circuit, and *alternating* if they continually reverse, flowing first in one direction and then in the other.

A *primary current* is said to be one which flows directly from a generating source. A *secondary current* is one induced by a primary current acting inductively on a circuit having no direct connection with the primary circuit. A current is said to be of *low tension* when its pressure or voltage is relatively low, and conversely, it is said to be of *high tension* when its pressure or voltage is relatively high.

10. Electromotive Force.—In order to produce a steady electrical current, two conditions are necessary. There must be a steadily maintained electric *pressure* known as *electromotive force* and a suitable conducting path to pass the current.

11. Conductors and Insulators.—A metallic circuit in which a current of electricity flows with little opposition is said to be a *conductor;* one which offers considerable resistance is known as a *partial conductor,* but a substance which completely impedes the flow of current is termed an *insulator.* It should be understood at the beginning that these terms are purely relative for an absolute insulator or a perfect conductor does not exist.

The best *conductors* of an electric current among the common metals, in order of their increasing resistance, are silver, copper, gold, aluminum, zinc, iron, platinum and nickel.

Examples of *insulators* given in order of their increasing value are dry air, shellac,

paraffine, amber, resin, sulphur, wax, glass, mica, ebonite, india rubber, silk, paper and oils.

12. **Production of Electromotive Force.**—To produce an electromotive force, it is necessary first to create a difference in potential or difference in electric pressure between two bodies or two points in the same body.

An electromotive force can be produced by various methods, for example:

(1) **By friction (static machine);**
(2) **By chemical action (primary and secondary batteries);**
(3) **By mechanical motion (dynamos or generators);**
(4) **By thermal action (thermo junction).**

In the following chapters these four methods will be considered consecutively and in detail.

Electromotive force is denoted by the unit termed the *volt*. The term *pressure* and *voltage* are used to express difference of potential or electromotive force (abbreviated E. M. F.) as well.

13. **Electricity by Friction (Static Electricity).**—When a piece of amber is rubbed with silk the amber is said to be electrified, and the presence of this electrification can be detected by holding the amber near to small bits of paper. The paper will be attracted to the amber. The silk is also in a state of electrification and if it is held near to another piece, similarly electrified, it will be repelled. Likewise two pieces of electrified amber will repel one another, and if the amber is held near the silk, the silk will be attracted to it.

This action of attraction and repulsion is said to be due to electric charges residing on these elements. The amber is said to possess positive (+) electrification and the silk negative (—) electrification. The electric charges are said to be caused by friction and are known as *static electricity*, meaning electric charges at rest or stationary.

It is to be noted that if a body containing a positive charge is brought in contact with one containing a negative charge, both charges being of equal intensity, they will neutralize and disappear; the bodies are then said to be *discharged*. Again if two charged bodies are joined by an electric conductor, all signs of electrification will disappear and there will pass through the conductor a momentary electric current.

There are other elements which when rubbed together will produce static charges of electricity, but the foregoing example is sufficient to illustrate the method. Machines for the production of electromotive force by friction are known as static or frictional machines but since they bear no particular relation to the principles involved in the functioning of wireless telegraph apparatus, a description will not be given.

14. **Electricity by Chemical Action (Primary or Secondary Batteries).**—A convenient and practical apparatus for setting up a steady electromotive force is the electrochemical cell which consists of two dissimilar elements, in other words, two unlike metals immersed into a dilute acid or alkali solution.

A simple cell, for example, consists of strips of zinc and carbon immersed in a conducting solution of sal ammoniac (ammonium chloride) as in Fig. 3. If the

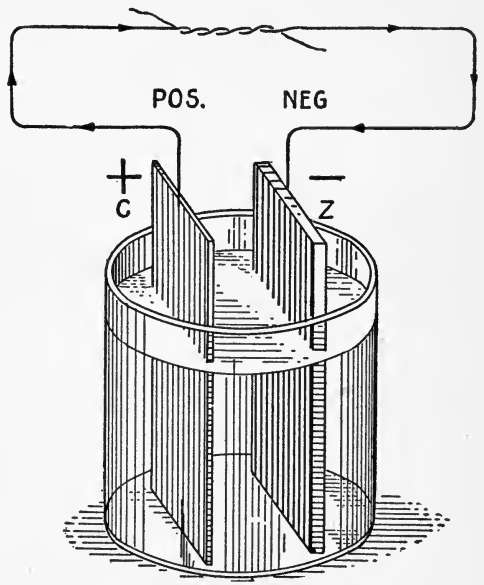

Fig. 3—Simple Electric Cell.

exposed terminals of these plates are joined by a metallic conductor, the cell is capable of supplying a continuous flow of electricity through the wire. It is observed as the current flows that the zinc strip wastes away, in fact, the consumption of the zinc furnishes the electromotive force necessary to drive the current through the cell and through the external circuit. The chemical changes within the cell, consisting of copper and zinc strips immersed in a dilute solution of sulphuric acid may be briefly described as follows: When the copper and zinc strips are connected together by a metallic circuit and the current begins to flow, the sulphuric acid attacks the surface of the zinc plate and forms a compound known as sulphate of zinc. During the formation of this sulphate some of the hydrogen contained in the sulphuric acid is liberated in the form of bubbles which immediately appear on the copper plate. Some of these bubbles rise to the surface of the liquid and escape into surrounding air, but others cling to the copper plate which gradually becomes covered with a film of hydrogen. Since hydrogen is a non-conductor of electricity, the amount of surface of the copper plate in contact with the battery solution gradually decreases as the accumulation of hydrogen gas increases, and accordingly the current output of the cell diminishes. In electrician's parlance the cell is now said to be "run down." Part of this reduction of current is due to the fact that hydrogen tends to set up a current within the cell in the opposite direction to the normal flow as well as cover the copper plate. A cell in this condition is said to be *polarized,* and various chemical and mechanical means have been devised to prevent the hydrogen bubbles clinging to the copper plate.

An electroscope (a device for determining the presence and nature of electric charges) indicates a strongly negative charge at the exposed end of the zinc element. The zinc plate is therefore known as the negative (—) pole of the cell, and the carbon or copper terminal, the positive (+) pole of the cell.

We learn from this that the action of the battery solution upon one plate more than on the other tends to keep the plates in a continuous state of electrification, the stronger manifestation being exhibited at the exposed end of the zinc plate and it is this difference in pressure which causes the current to flow round the external circuit.

The direction of the current inside the cell will be from the zinc plate through the solution to the carbon plate and outside the cell from the carbon plate through a metallic conductor to the zinc plate.

The conducting fluid in which the elements of the electric cell are immersed is known as the *electrolyte* or the *exciting fluid.* The plates and the metallic terminals attached thereto are termed the *poles* or *electrodes* of the cell. A number of cells connected together are known as a *battery.*

The type of cell just described is called a *primary cell** to distinguish it from a *storage* or secondary cell which will be described in detail further on.

It has been mentioned that the electromotive force or corresponding flow of current produced by the electrochemical cell is caused by two dissimilar elements. The list of metals given below are arranged in such order that any single element will be the *negative pole of the battery* when used with the metal next below it on the list, and the *positive pole* when used with the element next above it.

(—)	Sodium	Iron
	Magnesium	Copper
	Zinc	Silver
	Tin	Gold
	Cadmium	Platinum
	Lead	Carbon (+)

Referring to this list, although there will be a difference of potential, and consequently a flow of current between carbon and copper if joined together by a wire and immersed in a battery solution, there will be a very much greater electromotive force if carbon and zinc are employed.

15. **Secondary Cell.**—A simple secondary cell popularly known as a "storage battery" consists of two or more plates of lead placed in a dilute solution of sulphuric acid as in Fig. 4. One of the plates in this diagram is connected to the positive terminal of two primary cells (connected in series) and the other plate to the negative terminal. When current flows from the primary battery for some time through the solution from plate to plate as in Fig. 5 and afterwards the wires from the primary battery are disconnected and

* Cells of various types are described in books on elementary electricity to which the reader is referred for a more detailed description.

the plates are joined by a conductor, current will flow from the lead plate which was connected to the positive terminal of the primary battery to the opposite lead plate, and within the cell, in the opposite direction.

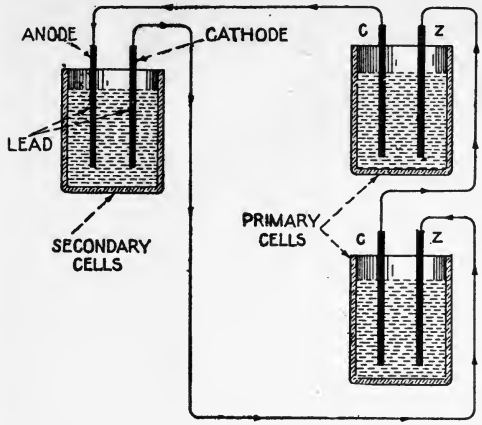

Fig. 4—Simple Diagram for "Charging" a Storage Cell.

When the current flows from plate to plate through the electrolyte, the plate connected to the positive pole of the battery receives a brown coating of *peroxide of lead* but the opposite plate becomes *spongy* or *porous*. Since the passage of the current through the cell has left one plate unchanged while it has coated the surface of the other plate with lead peroxide, it is reasonable to expect that if the charging battery is disconnected and the two dissimilar lead plates connected by a wire, a current of electricity will flow through the external circuit. In fact, we now have the essentials of an ordinary chemical cell. This cell will continue to supply current until the lead peroxide is partly used up and the plates will gradually return to the state they were in before the charging process took place. In order that the plates may be put in condition to deliver current again, they must be reconnected to the charging source and a new coating of peroxide of lead deposited upon the positive plate. It will be seen, therefore, that it is not really electricity which is "stored up" in the storage cell but that the current supplied to the cell during the charging process produces an electrochemical change which gives the plates dissimilar properties, and so long as this change is evident, there will be a difference of potential at the terminals and therefore an electromotive force. In commercial practice storage cells are "charged" by electric dynamos or generators rather than by primary cells.

The electromotive force of primary cells varies from .06 to 1.5 volts according to the nature of the battery elements and the grade of electrolyte. The electromotive force of the lead plate secondary cell lies between 2.1 and 2.6 volts.

In electrical equations, potential or E. M. F. is represented by the letter E. Instruments for measuring potential difference are known as *voltmeters*.

16. Current Strength and Quantity.—Up to this point we have not made mention of the strength of the current or the quantity of electricity flowing through a given circuit. We have simply referred to the potential difference and the consequent electromotive force generated by chemical cells. Just as we might use in the system of hydraulics the gallon per second as a unit to express the quantity of water flowing from a given source, so in electrical circuits, we express the quantity of electricity flowing by the unit

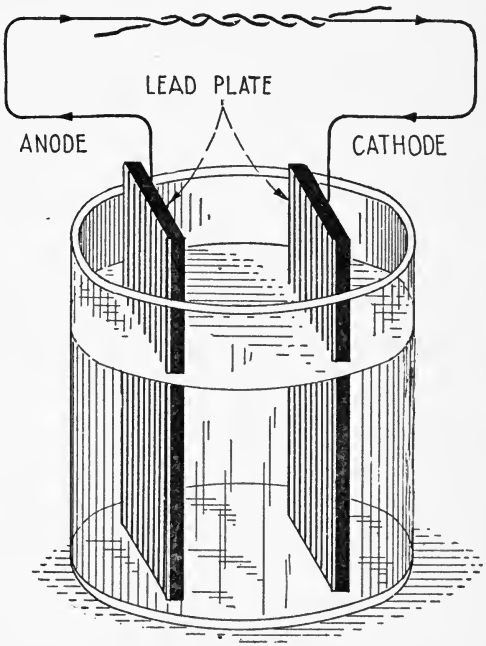

Fig. 5—Simple Storage Cell.

termed the *coulomb*. We must not confound the measure of the total quantity of electricity in a given circuit with its strength or rate of flow. The strength of an electrical current should be described as the rate of flow of electricity through a circuit per second of time. When one practical unit of quantity of electricity (one coulomb) flows every second continuously, the rate of flow or the *strength of the current* is said to be one *ampere;* if three unit quantities flow continuously every second, the strength of the current is three amperes and so on. *Hence we may define the ampere as the quantity of electricity flowing past any point in a circuit per second of time.*

The strength of the current in amperes will be seen to be independent of the length of time the current flows in a given circuit whether it flows for a fraction of a second, a minute, or an hour; if the quantity of electricity that would flow in one second is the same in any two or more cases the current in amperes is the same.

We may now define the *coulomb* as the amount of electricity that would pass in one second through a given circuit in which the strength of the current is one ampere.

If a current of one ampere flows every three seconds, the quantity of electricity delivered is three coulombs, or if three amperes of current flow for one second, the quantity is also three coulombs. From this we see that the quantity of electricity in coulombs is equal to the current strength in amperes multiplied by the time it flows in seconds or,

$$Q = I \times t,$$

Where Q = Quantity of current in coulombs,
I = Current in amperes,
and t = Time in seconds.

Hence to find out the quantity of electricity that flows around a circuit in ten minutes when the strength of the current is ten amperes, we substitute the value of I and t in this equation and multiply or, $Q = 10 \times 600 = 6{,}000$ coulombs.

It is more convenient in electrical practice to measure the strength of the current in amperes than to compute the total quantity of electricity flowing; hence, when we speak of the current available from a given electrical source, we employ the unit, the *ampere,* which indicates the rate at which it flows.

In electrical equations the ampere is represented by the letter I. Instruments for measuring the strength of current are called ampere-meters or *ammeters.*

17. Electrical Resistance.—If the terminals of a primary or secondary cell, or a battery of cells, are connected to a length of copper wire and a current measuring instrument such as the ammeter, connected in series with the circuit, a much greater reading or deflection of the ammeter will be obtained with a given length of copper wire than with an iron wire of the same length and diameter. This experiment indicates that a cell producing a constant E. M. F. (abbreviation for electromotive force) can force a very much stronger current through a copper wire than through an iron wire of the same proportions. We may conclude from this that iron offers a higher *resistance* to the passage of electricity than copper.

Resistance in electrical circuits may be defined as that property of bodies which opposes the flow of electric current. Just as water passes with difficulty through a small pipe of great length, but very freely through a large pipe of short length so, also, a small wire of considerable length and poor conducting qualities opposes the flow of electricity considerably, but a good conductor of short length and large diameter offers but very little resistance.

All substances are found to resist the passage of electricity but the resistance of metals is by far the least. Of all metals, silver is found to be the best conductor, and it therefore possesses less resistance than copper, for example. In fact, the ability of silver to conduct electricity is taken as unity or the base from which the specific resistance of other metals is computed.

The *specific resistance* of any material is the resistance of a piece of unit length and unit

cross section at an arbitrarily adopted degree of temperature. It is, in fact, the resistance of an inch cube of any substance at the temperature of melting ice.

The following table shows the relative resistance of chemically pure metals at the temperature of 32 degrees Fahrenheit.

Metal	*Relative Resistance*	*Resistance in Microhms per cubic inch*
Silver annealed	1.000	.5904
Copper annealed	1.063	.6274
Silver hard drawn	1.086	.6415
Copper hard drawn	1.086	.6415
Gold annealed	1.369	.8079
Aluminum annealed	1.935	1.144
Zinc pressed	3.741	2.209
Platinum	6.022	3.555
Iron annealed	6.460	3.814
Lead	13.05	7.706
German Silver	13.92	8.217

We learn from this table that a cubic inch of German silver, for instance, has a little more than 13 times the specific resistance of a cubic inch of annealed silver.

We find by experiment that the total resistance of a conductor varies directly as the specific resistance and length, and inversely as the cross sectional area. These quantities are related in the following way:

$$R = S \frac{L}{A};$$

where R = the resistance in ohms;
L = the length of the conductor;
A = its cross sectional area;
S = the specific resistance of the material.

Hence if we know the length and cross sectional area of a conductor, take the value of S from the foregoing table and substitute all three values in this formula, the total resistance is readily determined.

The resistance of metals is also affected by temperature; usually it increases with increase of temperature but certain substances decrease their resistance under rise of temperature, an example being carbon lamp filaments and certain electrolytic conductors such as battery solutions. The hot resistance of the carbon filament of an incandescent lamp is approximately one-half the value when cold. The resistance of a conductor, however, is always constant, if the temperature remains constant, irrespective of the strength of current flowing through it. If a conductor offers unit resistance to a current of one ampere, it offers the same resistance to a current of twenty amperes provided the temperature does not change appreciably. In most circuits encountered in practice, the rise of temperature is not appreciable, but in case a conductor does heat considerably, the actual resistance can only be obtained by taking the temperature into account as well as the specific resistance.

The *unit of resistance* is called the *ohm*. The international *ohm* is the resistance offered to the flow of an unvarying electric current by a column of mercury 106.3 centimeters long, weighing 14.4521 grams, at a temperature of 32 degrees Fahrenheit.

Examples of conductors in ordinary electrical practice having approximately this value of resistance follow:

1 ohm = 250 ft. of No. 16 B. and S. copper wire, which is 1-20th of an inch in diameter.
1 ohm = 1,000 ft. of No. 10 B. and S. copper wire, which is 1-10th of an inch in diameter.

One thousand feet of No. 32 B. and S. bare copper wire has resistance of 170.7 ohms. In electrical equations resistance is expressed by the letter R.

18. Grouping of Electrical Cells.—Battery cells may be grouped in three ways:

(1) In series;
(2) In parallel;
(3) In series multiple or series parallel.

Keeping in mind the units for expressing the strength and pressure of an electric current, we shall now see how the grouping of cells in various ways affects the current and pressure available for a given external circuit.

A *series connection* is made by joining the positive pole (the carbon plate) of one cell to the negative pole (zinc plate) of the next cell, as shown in the diagram, Fig. 6. The upper part of this diagram shows two chemical cells connected in series and the lower figure shows ten cells connected in series as they would be represented in ordinary electrical diagrams.

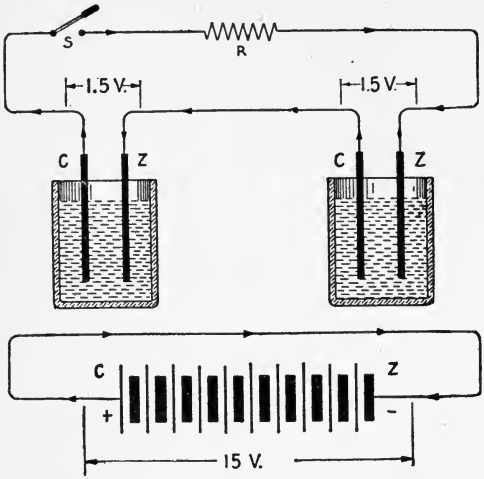

Fig. 6—Electric Cells Joined in Series.

In the upper diagram of Fig. 6, current flows from the carbon plate of the cell through the switch S, through a concentrated resistance coil R (which may be of German silver or other metal of high specific resistance) to the zinc plate of the right hand cell. The circuit continues from the zinc plate through the electrolyte to the carbon plate, from the carbon plate to the zinc plate of the left hand cell, and finally through the electrolyte to the carbon plate from which the flow originally began. When the switch S in this diagram is opened, the circuit from the battery cells is said to be *broken* or *interrupted;* but when switch S is closed, the circuit is called a closed circuit, current flowing freely from the positive to the negative pole of the battery.

Now the total resistance of this circuit is made up of the resistance coil R, the resistance of the connecting leads and the internal resistance of the battery cells, that is the resistance of the electrolyte from plate to plate. The strength of the current flowing through this circuit, as will be explained in detail further on, is governed by the total E. M. F. of the cells and the total resistance of the circuit and since the internal resistance of ordinary primary cells is rather high, it cannot be ignored in the grouping of cells.

When cells are connected in series, the total electromotive force is that of one cell multiplied by the number of cells in the group (provided all cells have identical potential); but the strength of the current will not exceed that of a single cell, and more likely will be less, due to the fact that the total resistance of the circuit increases as more cells are added to the battery. Grouping of the cells in either series or parallel affects the total internal resistance as follows: When a number of cells in a battery are connected in series, the total internal resistance is equal to the sum of the internal resistances of all the cells. When a number of like cells are connected in parallel, the total internal resistance is equal to the resistance of one cell divided by the number of cells in the battery.

A *parallel connection* is made by connecting the positive terminal of one cell with the positive terminal of another cell and the negative terminal of the first cell with the negative terminal of the second cell as in the diagram Fig. 7. The left hand figure shows the direction of the flow of current of two cells connected in parallel and by this connection, the total electromotive force of the cells is no more than that of a single cell but the current available (in amperes) is that of one cell multiplied by the number of cells in the group.

Applying this to the right hand diagram of Fig. 7 where four cells are con-

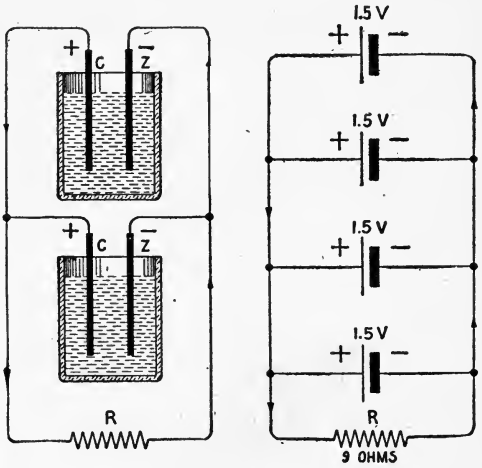

Fig. 7—Electric Cells Joined in Parallel.

nected in parallel, the potential difference across the terminals is 1.5 volts and the current available in amperes will be 4 × 15 or 60 amperes. If the resistance of R is rather high, of the order of a few hundred ohms, this potential difference can be measured by connecting a voltmeter across the terminals. It should indicate E. M. F. of 1½ volts. We see from this that the final effect of a parallel connection in the case cited is the same as if 4 zinc plates joined together and 4 carbon plates joined together were immersed in a single battery tank.

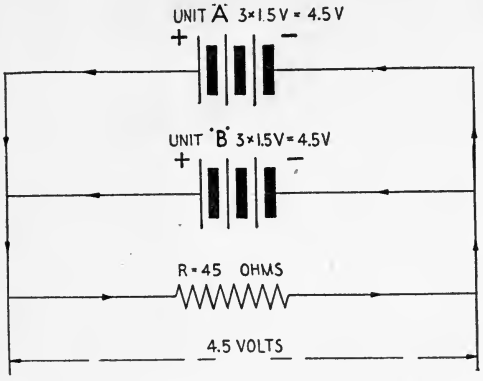

Fig. 8—Cells Grouped in Series Parallel.

A *series parallel connection* of electrical cells is shown in the diagram, Fig. 8, where groups A and B each consist of three battery cells joined in series and shunted by the resistance R.

Since groups A and B consist of three cells connected in series, then (in accordance with the statements made concerning series connection of cells in previous paragraphs) the voltage of each group will be 3 × 1.5 or 4.5 volts, but the current available from either groups A or B will not be greater than that of a single cell in either unit. Assuming that each group is capable of delivering current of 15 amperes, there will be available for the external circuit 15 + 15 or 30 amperes, but the total electromotive force of the two groups is that only of one group or 4.5 volts.

When the resistance of the external circuit is small in comparison with the internal resistance of the cells, there is no advantage in the series connection because the flow of current will be governed by the resistance of the battery rather than by the external circuit. In this case parallel grouping of the cells is most desirable. When the external resistance is large in comparison with the internal resistance of a single cell, the cells are most advantageously connected in series. It is thus plain that the connection to be adopted will depend upon the resistance of the external circuit as compared to that of the internal resistance of the battery. In the majority of cases, the most efficient grouping is the one where the internal resistance of the cells about equals the resistance of the external circuit.

19. Ohm's Law and Practical Application.—The relation between electromotive force, current strength and the resistance of an electrical circuit is disclosed by Ohm's law which states *that the strength of the current in amperes in any given circuit is directly proportional to the E. M. F. and inversely proportional to the resistance,* or using the symbols of the previous paragraph,

$$I = \frac{E}{R}$$

which may be written

$$\text{Amperes} = \frac{\text{Volts}}{\text{Ohms}}$$

The student cannot overestimate the importance of this law because only as it is thoroughly understood can electrical circuits be handled and cared for intelligently. Applying the law practically, if an E. M. F. of 6 volts is applied to a circuit having a total resistance of 3 ohms, the current strength in amperes is obtained as follows:

$$I = \frac{6}{3} = 2 \text{ amperes}$$

By transposing this equation we may write

$$E = I \times R$$

$$\text{or } R = \frac{E}{I}$$

It is plainly evident that if we know any two of the quantities involved in this expression, the third may be readily determined.

To illustrate: If the flow of current in a given circuit is 2 amperes and its total resistance 220 ohms, the E. M. F. applied to set up this value of current must have been, $220 \times 2 = 440$ volts ($E = I \times R$).

As a second illustration we may take the case of an ordinary carbon filament lamp which takes 0.5 amperes under pressure of 110 volts. According to this law, the resistance of the filament must be $\frac{110}{0.5}$ or 220 ohms ($R = \frac{E}{I}$).

We learn from Ohm's equation that to increase the flow of current through a circuit of fixed resistance we must increase the voltage. If the voltage be doubled, the flow of current is doubled and so on. By the same law if the flow of *current* through a given device and the *pressure* across its terminals can be measured, the resistance in ohms is obtained by simply dividing the pressure in volts by the current in amperes.

Ohm's law applied to the circuit of Fig. 6 yields the following results: If the coil R has a resistance of 9 ohms and the E. M. F. of the cells is 3 volts, the strength of the current through $R = \frac{3}{9} = 0.33$ amperes (assuming the internal resistance of the cells and connecting wires to be negligible). If R had 18 ohms resistance, 0.166 amperes would flow through the circuit. If, in the left hand drawing, Fig. 7, R has 9 ohms resistance and the E. M. F. is 1½ volts, the current $= \frac{1.5}{9} = 0.16$ amperes. Also if R in Fig. 8 had resistance of 9 ohms, the flow of current would be $\frac{4.5}{9}$ or 0.5 amperes.

If a number of electrical devices are connected in series as in diagram, Fig. 9, the current through each element is the same, irrespective of its resistance. In this diagram a source of direct current potential of 100 volts is applied to the circuit comprising an electric lamp L, of 180 ohms, a resistance coil R, of 50 ohms, and a telegraph sounder S, of 10 ohms. We may calculate the current flowing at any point through the circuit by first determining the total resistance. This, exclusive of the cells and connecting wires leading therefrom, is 180 + 50 + 10 = 240 ohms; the current in amperes $= \frac{100}{240} = 0.41$ amperes.

It is to be especially noted that the strength of the current through all the elements of this circuit is the same, irrespective of the resistance of the individual elements but the current is governed principally by the greater resistance, that of the lamp L.

If a voltmeter be connected to the terminals of any of the various resistance elements of the circuit (see V in Fig. 9), a difference of potential or electromotive force will be found to exist across the terminals that varies as the resistance and the strength of the current. The electromotive force may be calculated directly by Ohm's law if the resistance and the current are known. If the current flowing through each resistance element is 0.41 amperes, the pressure in volts is obtained by multiplying the current

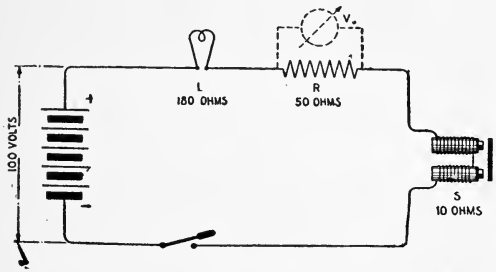

Fig. 9—Electrical Devices Connected in Series.

strength in amperes by the resistance in ohms. Thus the potential difference across $R = 0.41 \times 50 = 20.5$ volts; similarly across $L = 180 \times 0.41 = 73.8$ volts (the calculation being made on the assumption that the internal resistance of the cells is zero).

20. Divided Circuits.—A divided or shunt circuit is an additional circuit provided at any part of a circuit through which the flow of current sub-divides. One branch of such a circuit is said to be in multiple or in parallel with the other branch or branches.

Fig. 10 represents a divided circuit of 3 branches, R-1, R-2 and R-3. If resistances R-1, R-2 and R-3 are equal, the flow of current will divide equally between the 3 branches. If a current of 9 amperes is flowing in the main circuit as indicated by the ammeter A, 3 amperes will flow through each branch. If the resistances are unequal, the current divides inversely as their relative resistance.

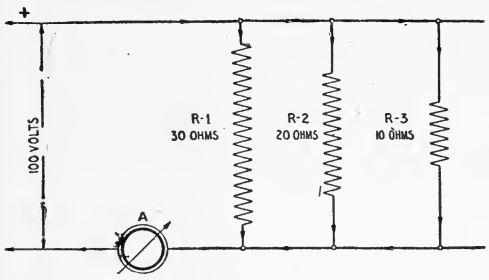

Fig. 10—Diagram Showing Branch Electrical Circuits.

The current in the branches of the divided circuit, Fig. 10, can be determined by finding the voltage across the terminals of each branch, and dividing the result by the resistance of each branch.

Thus the current in branch R-1 $= \frac{E}{R\text{-}1}$, R-2 $= \frac{E}{R\text{-}2}$ and in R-3 $= \frac{E}{R\text{-}3}$.

R-1 passes $\frac{100}{30}$ or 3.33 amperes; R-2 passes $\frac{100}{20}$ or 5 amperes and R-3, $\frac{100}{10}$ or 10 amperes. An ammeter connected in series with the circuit as at point C should indicate 3.33 + 5 + 10 or 18.33 amperes. (Resistance of the connecting leads being ignored).

When several resistances are connected in parallel their joint resistance is computed as follows:

$$R = \frac{1}{\frac{1}{R\text{-}1} + \frac{1}{R\text{-}2} + \frac{1}{R\text{-}3}}$$

where R = the joint resistance. Hence, in the circuit of Fig. 10, the joint resistance of the 3 elements is equal to:

$$\frac{1}{\frac{1}{30} + \frac{1}{20} + \frac{1}{10}} = \frac{1}{\frac{11}{60}} = 5.4 \text{ ohms.}$$

It is now clear that two or more resistances in parallel will conduct an electric current more freely than one, and the joint resistance of several resistances in parallel is less than the resistance of the smaller one.

When a number of resistances are connected in series their joint resistance is the sum of several resistances taken separately.

21. Electrical Work.—When a current of electricity flows through a conductor, it encounters frictional resistance and a certain amount of the energy is transformed into heat. The heat of a conductor under certain conditions may be so great that unless due precaution is taken, the wire will melt. We find that when an electric current has passed through a substance, the development of heat is proportional,

(1) To the time during which the current flows;
(2) To the square of the current;
(3) To the resistance of the conductor.

This may be expressed:

$$J = I^2 \times R \times T,$$

where J = the electrical energy expended in the form of heat in *joules.*

The *joule* is defined as that amount of energy which is expended during one second, by current of one ampere flowing through a resistance of 1 ohm and the joule per second is the practical *unit of electrical power* which has been named the *watt.*

Since power is the rate of doing work per unit of time, watts $= \frac{\text{joules}}{\text{time}}$.

Hence if 2,000 joules of electrical work are done in twenty seconds, the power exerted is $\frac{2000}{20} = 100$ joules per second = 100 watts. Power may also be expressed in the units of pressure and current strength. The power in watts in a given circuit in which direct current is flowing is equal to the product obtained by multiplying the current in amperes by the electromotive force in volts or

$$W = I \times E.$$

Hence, if in any given direct current circuit we measure the pressure by a voltmeter, and the current strength by an ammeter, the power in watts is obtained by multiplying together the readings of each instrument.

22. Electrical Horsepower.—The unit of mechanical work is a *foot pound.* It is the work done in raising a mass of 1 lb. against the force of gravity through a distance of 1 ft. Work done at a rate equal to 33,000 ft. lbs. per minute is called the horsepower (abbreviated H. P.).

One Mechanical H. P. = 33,000 ft. lbs. per minute = 550 ft. lbs. per second. Also it can be shown that 1 joule = 0.7373 ft. lbs., hence, 1 joule per second or 1 watt = 0.7373 ft. lbs. per second. Therefore 1 ft. lb. per second $= \frac{1 \text{ watt}}{0.7373}$

Since 1 ft. lb. per second $= \frac{1 \text{ H. P.}}{550}$ or $\frac{1 \text{ watt}}{0.7373}$, therefore 1 mechanical H. P. $= \frac{550}{0.7373} =$ 746 watts.

Now 746 watts = 1 mechanical H. P., therefore

$$\text{H. P.} = \frac{W}{746} \text{ or,}$$

$$\text{H. P.} = \frac{I \times E}{746}$$

Where I = the current in amperes, E = pressure in volts.

For example, an electric motor requires 30 amperes current at pressure of 110 volts; its rating in H. P. $= \frac{110 \times 30}{746} = \frac{3300}{746} = 4.4$ horsepower.

1 kilowatt = 1000 watts = 1.34 H. P.
1 H. P. = 746 watts = .746 K. W.

23. Definition of Electrical Units.—The practical units of electricity may be defined as follows:

The practical *unit* of *electromotive force* is the *volt,* and by definition the volt is that E. M. F. required to maintain the flow of current of one *ampere* through a resistance of one *ohm.*

The practical *unit of current strength* is the ampere, and it is that strength of current maintained by an E. M. F. of one *volt* through a resistance of one *ohm.*

The *ohm* is the *unit of resistance* and is such resistance of conductor or circuit that permits the passage of a current of one *ampere* under an E. M. F. of one *volt.*

The unit of *current quantity* is the *coulomb* which is the quantity of electricity flowing in a circuit when one *ampere* passes a given point during *one second* of time.

The *watt* is the unit of *electrical power* and is equal to *one joule per second.* It is the power of a *current of one ampere* flowing under *electric pressure of one volt.*

In connection with these units, the prefixes of *kilo, micro and milli* are employed, meaning respectively, 1,000 times, $\frac{1}{1,000,000}$ of and $\frac{1}{1,000}$ of. Thus a kilo-volt = 1,000 volts; a micro-ampere = $\frac{1}{1,000,000}$ ampere; and a milli-volt = $\frac{1}{1,000}$ of a volt.

24. Current Output and Voltage of Various Devices.—For students' information, we may review here the values of voltage and current to be expected from various current sources and circuits in daily use. For example, primary cells of various types generate an E. M. F. varying between 0.6 to 1.75 volts. The current output varies with the size and nature of the elements, lying between 5 and 30 amperes for common sizes. Storage cells generate an E. M. F. between 2.08 and 2.6 volts. The rated current output may vary from 5 to 200 amperes, depending upon the size of the cell.

Generators or dynamos are constructed to supply potentials from 4 to 6,000 volts, the latter value being rarely exceeded. Certain types of generators, for instance those used in electroplating establishments, may have a current output of 10,000 amperes, with an E. M. F. of 4 to 8 volts. The electric lighting wires of homes generally carry current at pressure of 110 volts, either direct or alternating current. Transmission lines for carrying large amounts of power over great distances may have voltages as high as 200,000 volts, but the strength of the current is comparatively small. The potential of trolley wires is generally about 550 volts. Voltages in excess of 110 volts are considered dangerous to human life, particularly those in excess of 500 volts.

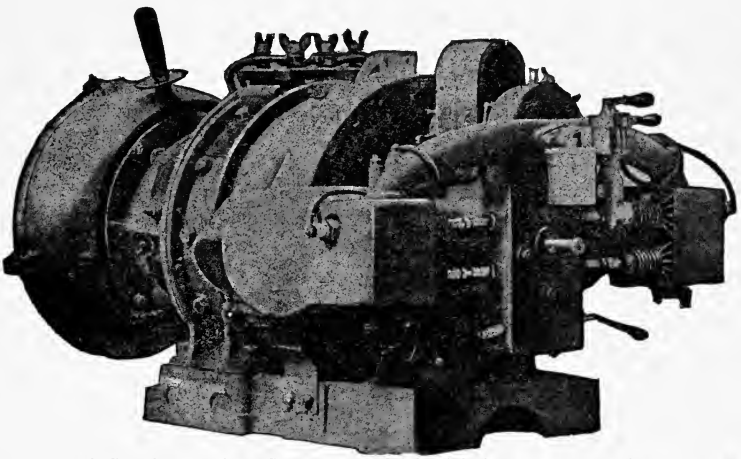

Fig. 10a—Combined Gasoline Engine, Generator and Disc Discharger for Portable Wireless Stations.

Note:—The physical standard for the ohm has been noted. The *standard for the strength of current* is an arbitrary one. It is found that if a silver and a platinum electrode are dipped in a neutral solution of silver nitrate (consisting of 15 parts by weight of silver nitrate and 18 parts of water) a steady current of one ampere flowing from the silver to the platinum will deposit .001118 grams of silver on the platinum per second.

The *standard for the volt* is the Weston Cadmium cell which has an electromotive force of 1.018 volts at a temperature of 20 degrees Centigrade.

PART III.

ELECTROMAGNETIC INDUCTION.

THE DYNAMO—THE FLOW OF ALTERNATING CURRENT.

25. Electromagnetism. 26. Magnetic Field About Two Parallel Conductors. 27. The Solenoid. 28. Induced Currents. 29. Mutual Induction. 30. Self-Induction. 31. Value of Induced E. M. F. 32. The Dynamo. 33. Determination of Frequency. 34. Strength of Magnetic Field. 35. Diagram of an Alternating Current Dynamo. 36. Direct Current Dynamo. 37. Shunt, Series and Compound Wound Dynamos. 38. The Electric Motor. 39. The Effect of Counter Electromotive Force. 40. Motor with Differential Field Winding. 41. Dynamo and Motor Armatures. 42. Development of Armature Windings. 43. The Alternating Current Transformer. 44. Electrostatic Capacity. 45. Reactance and Impedance. 46. Capacity Reactance. 47. Lag and Lead of Alternating Current. 48. Effective Value of Alternating E. M. F. and Current. 49. Measuring Instruments or Electric Meters. 50. Induction Coil. 51. Practical Electric Circuits.

25. Electromagnetism. An explanation of some of the more important phenomena surrounding a conductor carrying current follows: If a conductor through which a current of electricity is passing is laid parallel to and above a compass needle as in Fig. 11, the needle will tend to turn at a right angle to the conductor, but if the current is turned off, the needle will return to its original position. As we have previously mentioned a magnet suspended freely will tend to lie parallel to a given magnetic field, hence, it follows from this experiment that the flow of current through the wire of (Fig. 11) must have set up a magnetic field and the direction of which is evidently at right angles to the conductor.

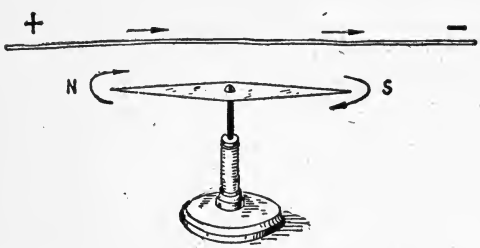

Fig. 11—Deflection of Compass Needle by Electric Current.

If the current in a horizontal conductor is flowing towards the north, and a compass is placed under the wire, the north pole of the needle will be deflected towards the west; if the compass is placed over the wire, the north pole of the needle will be deflected towards the east. Or, if the current is reversed in the conductor, the needle will point in the opposite direction in each case respectively. From this and other experiments we deduce that if the current in a conductor is flowing away from the reader, as in Fig. 12a, the direction of the lines of force will be around the conductor in the direction of the hands of a clock. If, on the other hand, the current flows towards the reader as in Fig. 12b, the direction of the lines of force will be around the conductor in the direction opposite to the movement of the hands of a clock or counter clockwise.

26. Magnetic Field About Two Parallel Conductors.—The magnetic fields of two parallel conductors are either mutually attractive or repellent, according to the direction of the current in each.

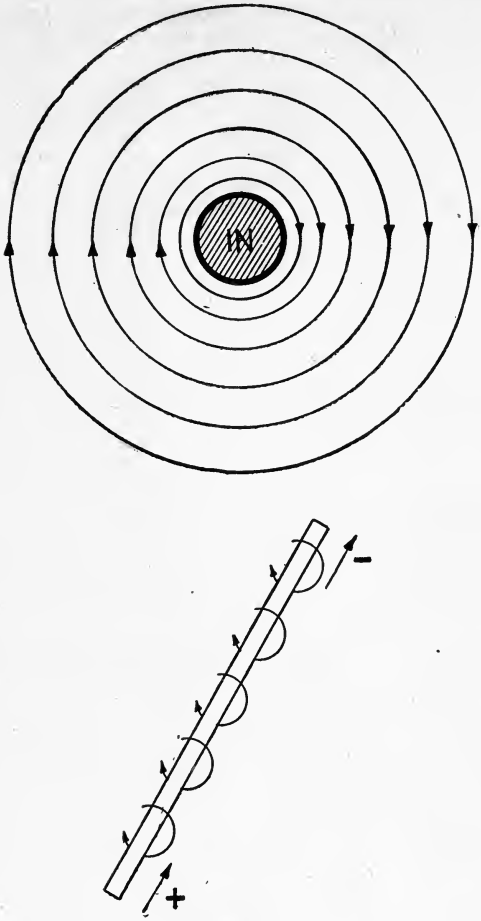

Fig. 12a—Showing Lines of Force Around a Conductor with the Current Flowing Away from Reader.

In the diagram, Fig. 13, the current in the left hand wire is flowing away from the reader, but in the right hand wire towards the reader. Since the general direction of the lines of force is opposite in either wire, their magnetic fields are in opposition or in repulsion. In the diagram, Fig. 14, current is assumed to be flowing in both wires in the same direction and since the lines of force have the same general direction, they combine and coalesce as shown by the outer lines.

27. The Solenoid.—If a number of turns of wire be wound in a spiral, as in Fig. 15, the lines of force generated by each turn of wire will unite with those set up by adjacent turns. The lines of force inside each turn will have the same general direction, forming several long lines of force that may be said to pass through the entire helix. These lines pass out of the coil at one end and enter at the other end, just as in the case of the bar magnet described in Part 1.

If the general direction of the lines of force inside this coil is from right to left, the left hand end will be a north pole, the opposite end, a south pole. The polarity of the coil may always be determined if the direction of the current is known. The rule is that if in looking at the end of the coil, the current flows around its turns clockwise, the end nearest to the observer will be a south pole, but if the current flows in the opposite direction, it will be a north pole.

A helix consisting of a number of turns through which current flows is known as a *solenoid.* We see from the foregoing that a solenoid has north and south poles and, in fact, possesses all the properties of a permanent steel magnet with the advantage that the magnetism in the case of the solenoid is entirely under control.

The strength of the magnetic field of a solenoid is proportional to the strength of the electric current passing through it and the number of turns of wire composing the coil, but the magnetizing power may be increased from 200 to 2,000 times by merely inserting an iron core or bar of soft iron within it.

In order that the phenomena of electromagnetic induction to be explained later may be better understood, the expansion and contraction of the magnetic field around a current carrying coil should be considered. *If direct current of unvarying strength flows through the solenoid, the lines of force stand still when the flow of current is fully established. If the rate of flow of current is increased or decreased the lines of force increase or decrease accordingly, or stated in another*

way, when the current rises, the lines of force move away from the wire but when the current falls, the lines of force collapse back upon the wire.

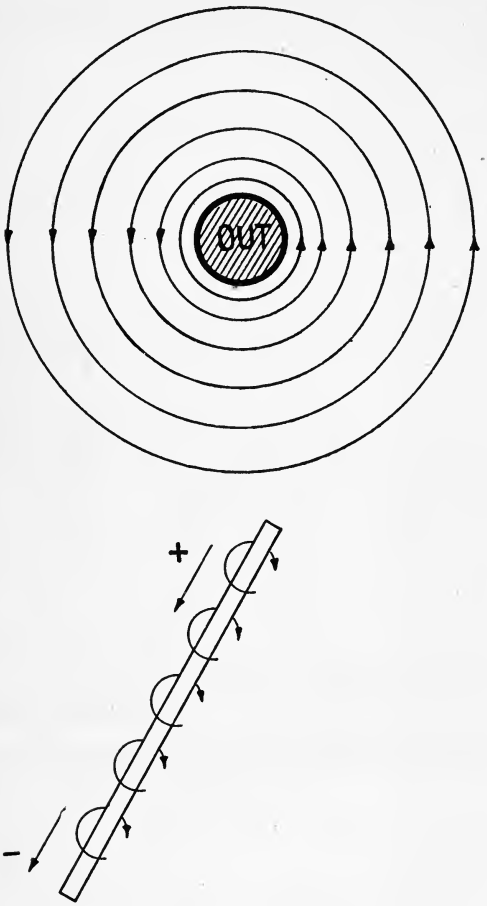

Fig. 12b—Showing Lines of Force Around a Conductor with Current Flowing Towards Reader.

The general direction of the magnetic field around a horse shoe magnet is shown in Fig. 16. If the direction of the flow of current from the battery around the convolutions of the two coils is as indicated, the left hand pole has north magnetism and the right hand pole has south magnetism. A piece of soft iron A placed near to the tips of the poles will be forcibly drawn to them and will only be released when the current is turned off. If a coil of resistance wire R, such as a German silver resistance regulator, is connected in series with the windings, the strength of the magnetic field can be closely regulated. If high values of resistance are inserted, the current may be reduced to a degree that the magnet will barely attract the piece A. Variation of the current flow would affect the field of a straight solenoid winding in the same manner. The point to be taken from this is that whenever electromagnets are employed for mechanical work such as lifting masses of iron or for exciting the magnets of a dynamo or motor, the strength of the field can be regulated over certain limits by a simple variable resistance.

If a horse shoe of hard tempered steel be inserted in the magnetic windings in place of the soft iron core and allowed to remain for a few seconds, upon removal it will be found to be *permanently magnetized.*

We have explained that the direction of the magnetic field around a conductor depends upon the direction of the flow of current. It is clear that if the current of the magnet in Fig. 16 is reversed the polarity will be reversed as shown in Fig. 17.

The strength of the magnetic field about a solenoid can be varied by fluxes of opposite directions as shown in Fig. 18. The solenoid windings A and B are wound in opposite directions connected in series and finally to the terminals of the battery. Since current flows through the two coils in opposite directions their magnetic fields are repellent and if the coils are telescoped together (one within the other) the magnetic field will be nearly destroyed. If the two coils are partially telescoped, the resultant magnetic field varies accordingly. Advantage is taken of this principle in constructing an instrument known as the *variometer,* which is particularly useful for tuning wireless telegraph circuits.

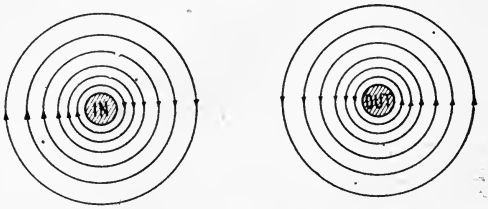

Fig. 13—Lines of Force About Two Conductors Carrying Current in Opposite Directions.

The electromagnet in some form is employed in nearly all electrical machinery, and, therefore, the laws governing magnetic fields should

have careful attention. Study of the phenomenon of magnetic induction is particularly important as it is encountered at many points in a wireless telegraph set.

28. Induced Currents.—We have already seen that a magnetic field invariably accompanies the flow of electricity through a conductor and conversely we find that whenever a conductor is moved through a magnetic field, an electromotive force will be *induced* therein, and a flow of current will take place if the conductor forms a closed or continuous circuit. This is the fundamental principle upon which the operation of the dynamo or generator is based.

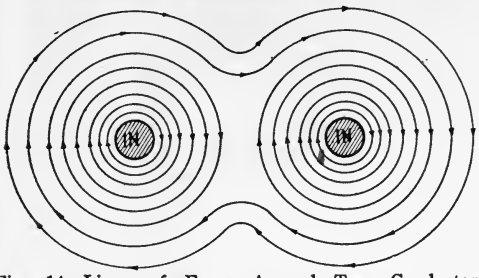

Fig. 14—Lines of Force Around Two Conductors Carrying Current in the Same Direction.

Experiment reveals that the production of the E. M. F. is conditioned by the following rule: The motion of the coil must take place in such a way as to change the total number of magnetic lines of force which are enclosed by the coil.

For instance, simply moving a coil in a uniform field from one position to another, so that the lines of force enclosed by the coil remain of constant number, will not induce a flow of current, but if the coil is rotated, for example, so that the lines of force enclosed by it either increase or diminish, an E. M. F. will be induced which varies according to the rate at which the lines of force change.

The induction of current by a magnetic field threading in and out of a coil can be shown by a simple experiment. If the terminals of a solenoid wound with fine wire are connected to a current indicating device, such as a galvanometer, and a permanent bar magnet plunged into the interior of the winding, a momentary deflection of the galvanometer is observed. If the bar remains within the coil there is no further movement of the current indicator. If the bar be suddenly withdrawn, the galvanometer gives a second deflection in the direction opposite to that cited in the first instance. This experiment proves that the cutting of the flux through a coil of wire induces a current therein and that the direction of the current reverses with the flux. Currents will be induced in the coil if it remains stationary and the magnetic flux passes in and out of the coil, or if the field is stationary and the coil is moved through it. In either case, an E. M. F. is generated proportional to the rate at which the conductor cuts through the field.

We may substitute for the bar magnet just mentioned a solenoid winding P and cause its magnetic field to act upon a second winding S as in Fig. 19. When the circuit of winding P is opened at key K, no lines of force are in evidence, but at the moment the key is closed, the lines of force expand from the core P and intersect or cut through the winding S. The galvanometer then gives a momentary deflection. If the current is left to flow through P, there is no further effect in S until the circuit of P is opened by the key; the galvanometer now gives a second momentary deflection but the needle moves in the opposite direction just as in the case of the bar magnet. Thus for each "make" and "break" of the first circuit, two pulses of current flow through the winding S, the first in one direction around the circuit, and the second in the opposite direction. This current is said to be induced in S by *electromagnetic induction.*

29. Mutual Induction.—It is of great importance to note that the effect in S takes place only when the circuit of P is made and broken. When current is flowing in P continuously, the magnetic lines of force are stationary, and consequently current is not induced in S. But when the lines of force about S rise and fall, then there will be a movement of current through S. If the winding S is placed at a right angle to P instead of lying parallel to it, a change of flux in P will have little or no effect upon S.

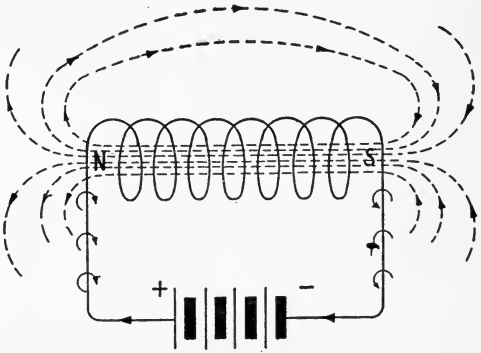

Fig. 15—Magnetic Field of Solenoid Winding.

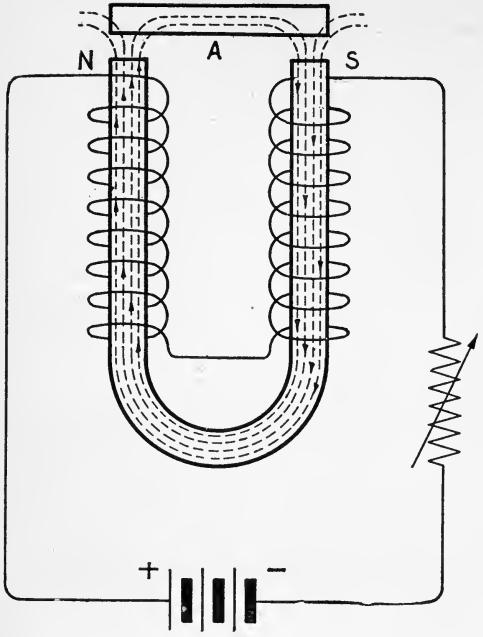

Fig. 16—Magnetic Field of Horse-shoe Magnet with Current Flowing in Definite Direction.

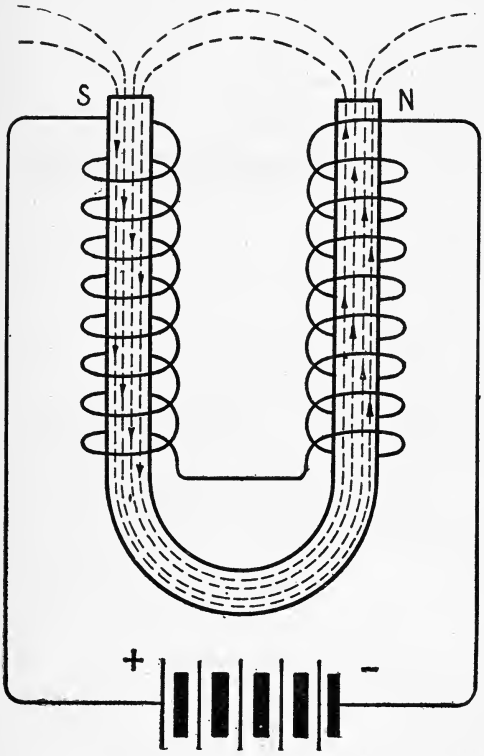

Fig. 17—Showing How Magnetic Field Reverses with Reversal of Current.

The direction of the current induced in S should be observed. When the lines of force increase through S, the induced pressure is counter to that which originally flowed in winding P, but when the lines of force decrease through S, the induced current has the same direction as the original current from the battery through winding P.

It is clear that the lines of force in S are in the opposite direction to those which set up the current in S. The field of force created around S therefore reacts upon winding P tending to build up a current in opposition to that already flowing in P. That is, the change in strength of the primary current in P induces a secondary current in S which in turn induces a back pressure in P. The induction due to the two circuits reacting upon each other is called their *mutual induction* which is a measurable quantity.

30. Self-Induction. — We have seen that the expanding field of winding P induces an electromotive force in winding S. Similarly the field produced by each turn in winding P will cut neighboring turns, thereby inducing in them electromotive forces that tend to oppose the E. M. F. of the original current. On the other hand, when the current in winding P diminishes, the lines of force contract and thereby induce electromotive forces in adjacent turns, that tend to set up currents in the same direction as the original current.

This inductive action of a coil or conductor upon itself is called *self-induction.*

Self-induction may be defined as the property of a circuit that tends to prevent any change in the strength of current passing through it. This is clear from the fact that self-induced currents either tend to prevent the rise or the fall of current through a circuit.

The effects of self-induction are noticeable only in direct current circuits when the current is turned on and off, but in alternating current circuits they are ever present. All conductors have self-induction, the amount depending upon their size and shape. Coiled wires have greater self-induction than a long straight wire. The self-induction of a coil

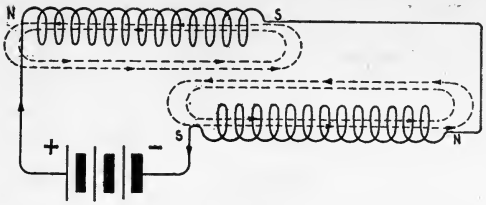

Fig. 18—Variation of Magnetic Field by Opposing Coils.

without an iron core is practically constant. If a given coil has an iron core, the self-induction is greater in proportion to the permeability* of the iron.

The *coefficient of self-induction* or *inductance* is also defined as the property of a conductor by which energy may be stored up in magnetic form.

The unit of inductance is the *henry* and represents the cutting of 100,000,000 lines of force when one ampere of current is turned on and off per second; that is, if one ampere is turned on and off, in a given conductor, the electromotive force induced by the collapse of the magnetic field, equals one volt.

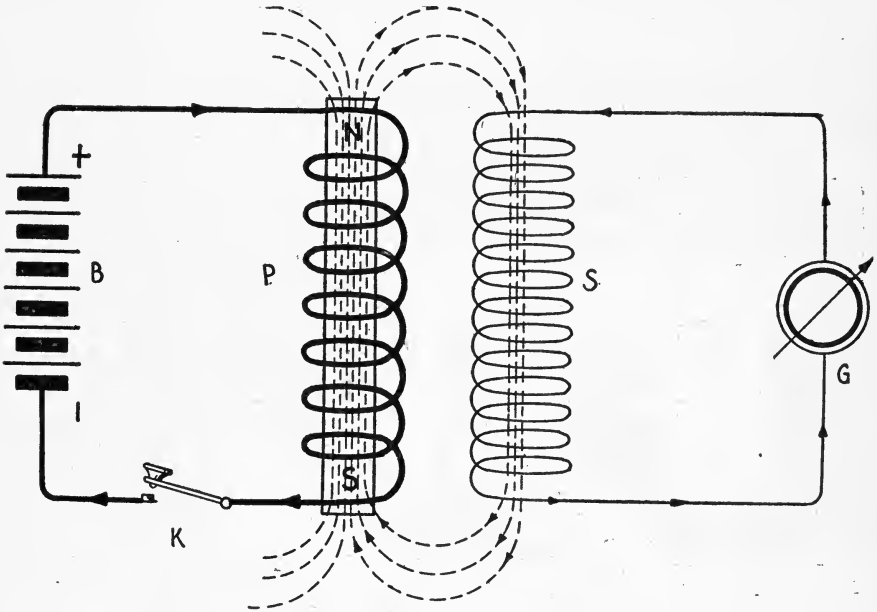

Fig. 19—Diagram Illustrating the Principle of Electromagnetic Induction.

This means that a conductor or coil to have self-induction of one henry must be of such length and shape that when one ampere is flowing it is surrounded by 100,000,000 lines of force, and when the current is turned on and off, 100,000,000 lines of force cut through the conductor setting up a pressure of one volt.

This can be expressed:

$$L = \frac{M \times T}{I \times 100{,}000{,}000}$$

where T = the total number of turns in a given coil;
M = the total lines of force threading through the coil;
and I = the current in amperes.

If M = the lines of force threading through the coil when the current = 1 ampere, then

$$L = \frac{M \times T}{100{,}000{,}000}$$

The unit, the henry, is applicable to coils of a great number of turns having iron cores, but for coils encountered in wireless telegraph transmitters, some sub-multiple of the henry is desirable, such as the *micro-henry*, the *milli-henry* and the *centimeter*.

* Term permeability expresses the ability of a magnetic substance to conduct magnetic lines of force.

$$1{,}000 \text{ centimeters} = 1 \text{ micro-henry};$$

$$1 \text{ micro-henry} = \frac{1}{1{,}000{,}000} \text{ henry};$$

$$1 \text{ milli-henry} = \frac{1}{1{,}000} \text{ henry};$$

The inductance of a given circuit is generally calculated by one of several formulæ.

31. Value of Induced E. M. F.—Referring to Fig. 19: The electromotive force induced in winding S is conditioned on the ratio of the turns in the two windings and the rate of the change of flux threading through S. For instance, if P has 100 turns of comparatively coarse wire such as No. 14 or No. 16 B. & S. wound over an iron core and S has many thousand turns of fine wire such as No. 36 B. & S., an electromotive force of several hundred thousand volts may be induced in S. Should winding S have less turns than winding P, the E. M. F. induced in S will be lower than that of winding P. Advantage of this principle is taken in the design of the apparatus known as the *induction coil,* in which the circuit of P is interrupted from thirty to one hundred times per second. Then if winding S is given a large number of turns and its terminals are separated by a space of several inches, the voltage may be so great as to jump the gap in the form of an electric spark.

To properly distinguish the various circuits, winding P is called the *primary;* winding S the *secondary* winding. The current in P is termed the *primary current* and in S the *secondary current.*

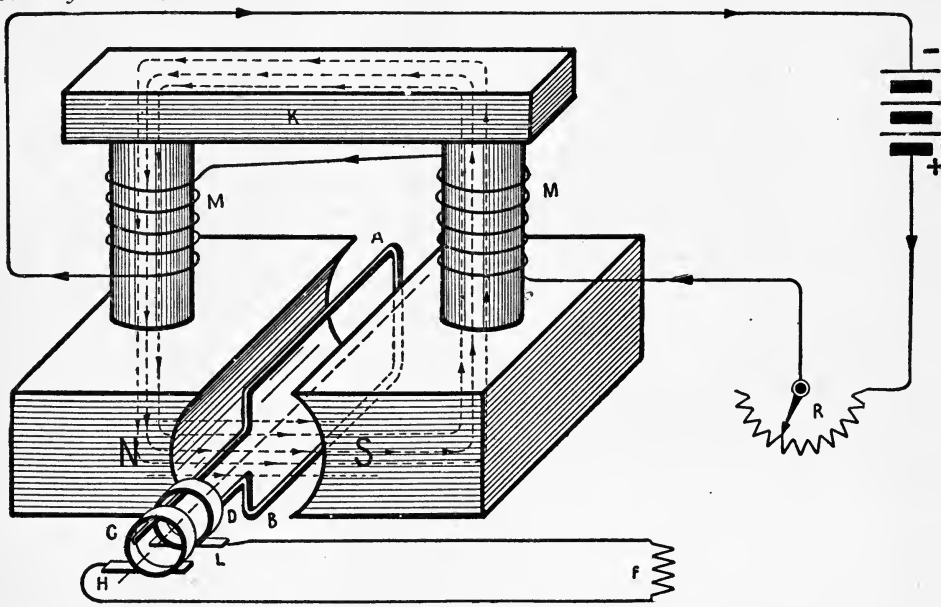

Fig. 20—Fundamental Diagram of Simple Alternator.

32. The Dynamo.—We may briefly define the dynamo as a machine for converting mechanical energy into electrical energy by the principle of electromagnetic induction. But unlike the simple battery or storage cell the dynamo may generate either *direct* or *alternating* current. Alternating current dynamos are frequently called *alternators.* The student can nearly always distinguish between the two machines by observing the part of the dynamo at which the current is collected. If the brushes rest on a commutator made up of a number of copper segments separated by insulating material, it will be a direct current dynamo, but if the brushes simply rest on two brass rings, it will be an alternating current dynamo.

The fundamental principle of the dynamo follows: Whenever a coil of wire rotates through a magnetic field of uniform strength in such a way that the

number of lines of force enclosed by the coil increase or diminish uniformly, a current of electricity will be induced in the coil, the strength of which at any instant is proportional to the rate of the change of flux.

Hence the essentials of a dynamo are:

(1) A magnetic field of constant strength;

(2) A number of coils mounted on a shaft and rotated in such a way as to cut through the magnetic field;

(3) Means for conducting the current induced in the rotating coils to an outside circuit.

A diagram of an elementary alternator appears in Fig. 20. A uniform magnetic field is set up between the magnetic poles N and S by the current from battery B-1 which flows through the magnet windings M, M. The rectangle of wire A, B is mounted on a shaft which rotates clockwise. Two brass rings, C, D, are mounted on the shaft but insulated from it. The copper brushes H and L make contact with these rings, and the circuit is completed through F (any current absorbing apparatus).

According to the principle just explained, if A, B rotates around its axis, an E. M. F. will be induced in the loop, the magnitude of which depends on the rate of change of the number of lines of force threading through the loop. When in the vertical position of Fig. 20, the loop encloses the maximum number of lines of force, but when side A goes underneath the S pole and side B goes underneath the end pole, as in Fig. 21, the rectangle will enclose the minimum number of lines of force when it has moved 90 degrees or in a horizontal position. As A moves out of the field of the south pole and B out of the field of the north pole, the rectangle reaches another vertical position (but with the two sides of the rectangle reversed) and again encloses the maximum number of lines of force. As the rotation of A, B continues, side A goes into the field of the N pole and side B goes into the field of the S pole, where for a second time the minimum number of lines of force are enclosed after which the loop returns to the position mentioned at the beginning.

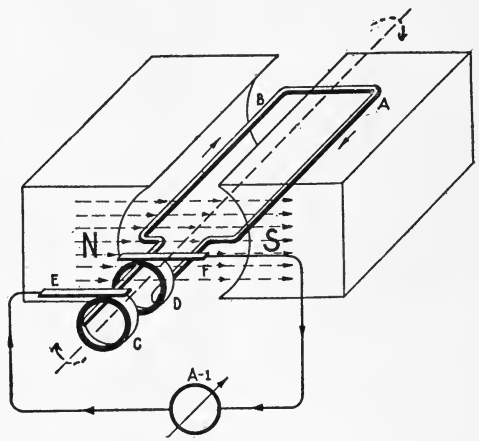

Fig. 21—Showing Position of Armature Conductors for Maximum Cutting.

Now, according to the rule which governs the direction of the flow of current in a conductor cutting through a magnetic field, when A, B, is in the position of Fig. 21, a current will flow towards the rear of the rectangle in the left hand side, and towards the front of the rectangle on the right hand side. Then if A, B, continues ½ revolution, so that side A is cutting through the N field and side B through the S field, current will flow in A, B, in the opposite direction. It is clear that in a complete revolution, A, B, undergoes two changes of current which flows first in one direction around the rectangle and then in the opposite direction. The current is said to have gone through a complete *cycle*.

We see that during the first quarter revolution of loop A, B, or from 0° to 90°, the E. M. F. increases from zero to maximum; from 90° to 180° the E. M. F. decreases from maximum to zero; from 180° to 270° the current reverses and the E. M. F. increases from zero to maximum, and from 270° to 360° the E. M. F. again decreases from maximum to zero.

The changes in the strength of the current induced in A, B, can be shown by a wave-like curve as in Fig. 22, in which the successive positions of the rectangle are shown by the positions, 1, 2, 3, 4, 5, 6, 7, 8, etc. From position 8-16 the E. M. F. gradually rises, maximum E. M. F. being attained in position 4-12. This increase of E. M. F. is indicated by the ascending slope of the curve B to C. From position 4-12 on, the E. M. F. decreases (as indicated by the descending slope of the curve B to C), the minimum cutting of the lines of force taking place at point 8-16. This corresponds to the point X^1 on the horizontal line. As the rectangle continues the revolution, the lines of force are cut on an increasing angle, another maximum of E. M. F. being attained at point 12-4, but of the opposite sign as

shown at point D. From this point the E. M. F. decreases to zero or when the rectangle A, B, is in the position of 16-8. This curve depicts the gradual rise and fall of the E. M. F. in a dynamo coil and is known as a sine curve, the plotting of which is explained in the principles of co-ordinate geometry. The curve shows the relation between time (fractions of a second) and the strength or amplitude of the current at any given point during the complete revolution of a dynamo coil. The curve represents a complete cycle of alternating current. Vertical lines drawn from the horizontal A, B, represent time in fractions of a second. The horizontal lines drawn from the successive positions of the coil, 1, 2, 3, 4, etc., correspond to the position of the dynamo coil at any particular instant. At points where the horizontal and vertical lines intersect, a common line is drawn connecting them, which results in the wave-like curve.

33. **Determination of Frequency.**—The frequency of an alternating current dynamo is expressed in *cycles* per second. We see from the previous paragraph that one complete cycle of current is generated when A, B, makes a single revolution. Hence if A, B, rotates 60 complete revolutions per second, there will be 120 reversals or *alternations* of current per second. Since two alternations of

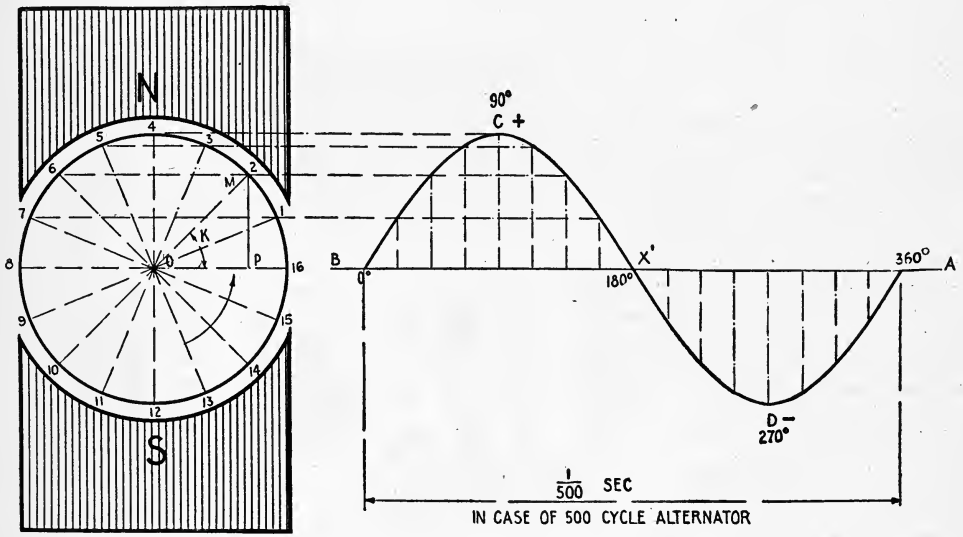

Fig. 22—Sine Curve Showing Rise and Fall of Current during One Complete Cycle.

current constitute a complete cycle, the frequency of this generator is said to be 60 cycles.

The frequency of any alternator may be determined by first counting the number of field poles and by measuring the speed of the armature per second of time, or

$$\text{Frequency} = \frac{N \times S}{2}$$

Where N = the number of field poles;
S = the speed of the armature in revolutions per second.

Direct reading *frequency meters* are in daily use. They are connected in shunt to the power circuit like the voltmeter. (Frequency meter is described in Paragraph 49, section C.)

34. **Strength of Magnetic Field.**—The strength of the magnetic field about the poles N and S, Fig. 20, is proportional to the strength of the current in amperes and the number of turns of the coil. The strength of the magnetic field is the same whether a current of a large number of amperes is flowing through a few turns of wire or a relatively weak current flows through a greater number of turns. The turns of the field winding of any dynamo are of a fixed number; hence the strength of the magnetic field is regulated by increase or decrease in the strength of the current flowing through the field winding.

The field current is regulated by a device known as a *field rheostat* which is simply a variable resistance connected in series with the circuit.

The voltage developed in any given dynamo coil is proportional to the rate of cutting of the magnetic field. In the case of the rectangle A, B, of Fig. 20 or 21, the total flux passes in the coil twice and out twice during one revolution or during one cycle. If the coil enclosed 100,000,000 lines of force and made one complete revolution per second, 100,000,000 lines of force would be thrust into the coil twice and thrust out twice. This would be the equivalent of cutting 400,000,000 lines of force per second and in this particular case the induced E. M. F. would be 4 volts. If the number of turns on the armature winding were doubled, all other conditions remaining equal, the voltage would

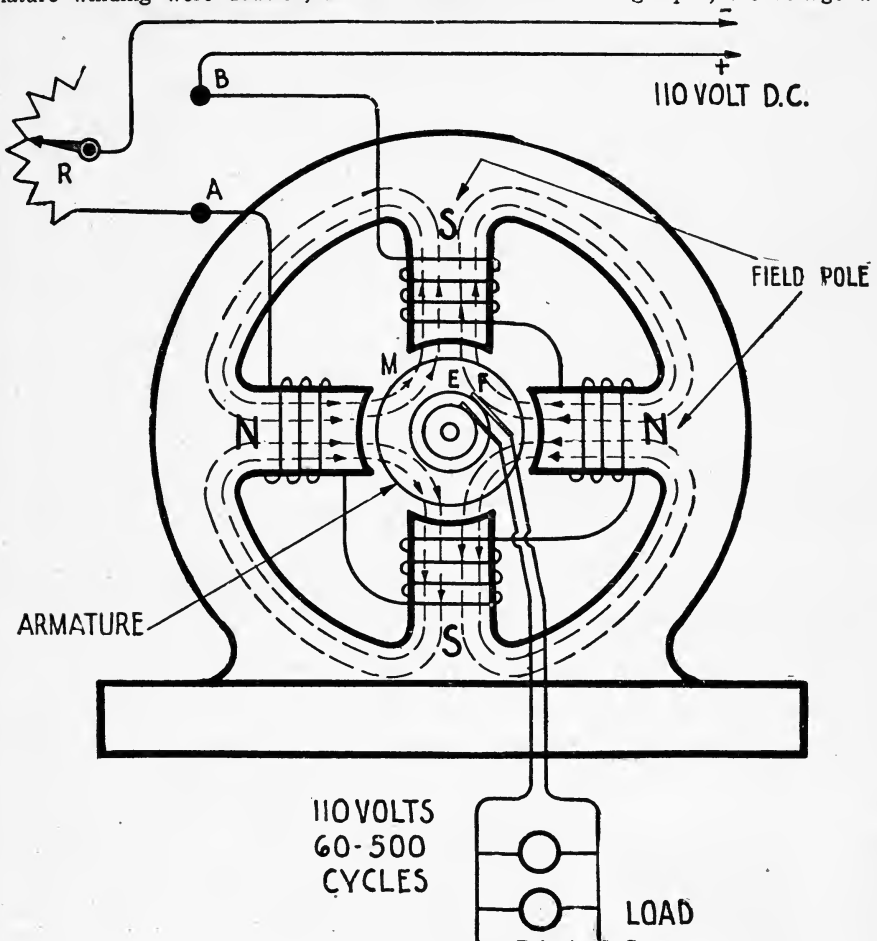

Fig. 23—Fundamental Diagram of 4 Pole A. C. Generator.

be doubled, or we might state that if there were N turns, the E. M. F. developed would be N $\times$ that of 1 turn.

The fundamental equation for the alternating current dynamo is:

$$E = \frac{N \times n \times \Phi \times p}{100{,}000{,}000}$$

Where E = the average voltage of the dynamo;
n = the revolutions of the armature per second;
N = the number of conductors on the surface of the armature;
Φ = the total number of lines of force;
p = number of field poles.

In a commercial dynamo, the only factors in this equation which are variable,

are (1) the density of the magnetic field and (2) the speed of the dynamo armature per second. We see from this that the voltage of any generator may be increased by increase of the speed of the armature or by increase of the strength of the magnetic field surrounding the armature coils. Commercial generators are built usually for constant speed. Regulation of the voltage is obtained by means of the field rheostat.

35. **Diagram of an Alternating Current Dynamo.**—The essential parts of an alternating current dynamo are:

(1) Field Magnets.
(2) Armature.
(3) Collector Rings.

The diagram of Fig. 23 is merely intended to show the general details of the construction and connections of an alternating current dynamo. The field poles which are firmly bolted to the circular iron frame are represented by N, S, N, S, the armature at M and the collector rings at E, F. The field poles are wound alternately in opposite directions so that the current circulates about the turns in opposite directions, giving the poles alternately north and south polarity. The armature M is built up of a number of slotted sheets of soft iron which are pinned together and mounted on a common shaft, the copper conductors lying lengthwise of the core in such a way that the coils will be filled and emptied with magnetic flux (coils not shown). If these coils are properly connected together, the currents induced therein (by the change of flux) will flow in the same general direction, the voltage of one coil being added on to that of the next coil. It is to be especially noted that the source of continuous or direct current for exciting the field poles of an alternator is generally supplied from an external source which may be either a small direct current dynamo known as an *exciter* or a battery of storage cells. In most cases encountered in wireless working, the E. M. F. of the direct current source is 110 volts and the turns of the field winding are of such number that the correct amount of current flows with small amounts of resistance in series at the rheostat R. As already explained, this resistance is known as the *field rheostat* or *field regulator.*

When the armature M revolves at a uniform rate, an alternating current is induced in the coils which is collected by the brushes E, F in contact with 2 collector rings, the voltage varying with the design of the machine. For purposes of wireless telegraphy the voltage of the generator may vary from 110 to 500 volts and the frequency of the current may vary from 60 to 500 cycles standard frequencies being 60, 120, 240 and 500 cycles.

If the armature of Fig. 23 were revolved 1800 revolutions per minute, current at a frequency of 60 cycles per second would be obtained from its armature. Remembering the formula given for determining the frequency we see that in a complete revolution of the armature any point passes through four fields which would set up four reversals of current. If the armature revolves at the rate of 1800 revolutions per minute, corresponding to 30 revolutions per second, there will be 4 × 30 or 120 reversals of current, or a frequency of 60 cycles. If the generator had 32 field poles, the frequency will be 32 × 30 or 960 alternations corresponding to 480 cycles.

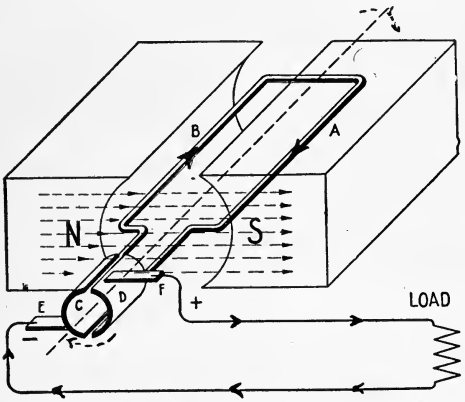

Fig. 24.—Showing the Function of a Simple Commutator.

The student should understand that the foregoing description and drawing simply show in an elementary way the construction and functioning of a generator. The diagram is merely intended to indicate the connections of the machine, the direction of the magnetic lines of force and the method by which the voltage generated by the armature is regulated.

36. Direct Current Dynamo.—Direct current is obtained from dynamo coils by a *commutator,* which is placed on one end of the armature driving shaft. In simple form it consists of a split brass or copper ring of two parts, C, D, which is thoroughly insulated from the armature shaft (shown in Fig. 24). The circuit from the loop A, B is completed through the contact brushes E and F through an external load as at R.

The function of the commutator should be clear from the following explanation: Assume the coil A, B to be in rotation in the direction of the arrow; then in the particular position shown in Fig. 24, the segment D will be a (+) pole and segment E a (—) pole. The current will therefore flow in the external circuit from brush F to brush E. When A, B turns completely over so that side B goes under the south pole and side E under the north pole, the current will flow in B as it did formerly in side A, that is, towards the brush F. Similarly, when A is in the north field, the current will flow away from brush E. Therefore, the current will flow in the external circuit in the same direction as in the first case.

We see also that in the second position mentioned, the current in B is flowing oppositely to that when B was cutting through the north field, but we must keep in mind that commutator segment B now makes contact with brush F instead of brush E. Thus the current will flow in one direction in the external circuit irrespective of the rate at which A, B revolves.

A steady flow of current like that obtained from a battery of chemical cells cannot be obtained from the dynamo; the latter in reality generates a pulsating current. If the dynamo armature is composed of a great number of coils, the pulsations are so minute and follow each other so rapidly that the current is practically continuous. That is, these pulsations are made to overlap one another by mounting a number of loops of the armature and connecting them in series so that immediately one set of coils passes the position of maximum cutting of the lines of force, another set will take their place. The greater the number of the armature coils the greater will be the number of commutator segments required. In fact, commutators in commercial dynamos may have from 50 to 150 segments depending upon the design of the dynamo.

37. Shunt, Series, and Compound Wound Dynamos.—We have already explained that continuous or direct current must flow through the field windings of an alternating current dynamo and that this current is obtained from an external source. In the direct current dynamo, the current for excitation of the field is obtained from its own armature.

When the terminals of the field winding are tapped across the brushes of a direct current dynamo, it is called a *shunt* wound dynamo. The circuit for this machine is shown in the diagram, Fig. 25, where the terminals of the field winding are tapped across the armature circuit at points C and D. A regulating rheostat connected in series with the field circuit at R permits an increase or decrease of the strength of the current flowing. The field winding of the shunt dynamo is composed of a large number of turns of comparatively fine insulated wire, the actual number of turns being governed by the flux required, whereas the armature coils have comparatively coarse wire. Two paths are presented to the current as it flows from the armature of this machine, one being the field circuit and the other, the external circuit.

In well designed shunt dynamos, the resistance of the shunt circuit is always greater than the resistance of the armature and external circuit, but the strength of the current flowing in the shunt coil is in fact comparatively small even in the larger types of generators.

The student may question how current is set up in a machine of this type when it is first put into motion. The fact is that the initial building of the current is due to residual magnetism in the field cores. When

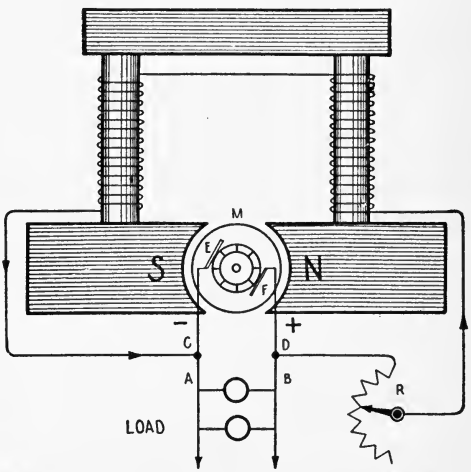

Fig. 25—Circuit of Shunt Wound D. C. Generator.

a piece of soft iron has been magnetized, no matter how soft the iron may be, a certain number of magnetic lines of force are retained when the magnetizing current has been turned off. These lines are known as the *residual lines of force* and the cores of the field winding are said to possess *residual magnetism.*

When the dynamo armature is first set into rotation, the residual lines of force pass in and out of the armature conductors through the core, generating therein a feeble current which flows to the field winding and increases the number of lines of force threading through the armature coils. This induces a stronger current in the armature conductors which continually adds to the strength of field until the normal voltage of the dynamo is established. The complete process usually requires from 10 to 50 seconds. After the generator armature attains its normal speed, the voltage across its terminals may be raised or lowered by the rheostat R. If the resistance of R is increased, the voltage diminishes, or if the resistance of R is decreased, the voltage increases.

A diagram of a *series wound generator* appears in Fig. 26. The field magnets of this type are wound with a few turns of thick wire joined in series with the armature brushes and all of the current generated by the armature passes through the coils of the field magnet to the external circuit. The current in passing through the windings of the field magnet, energizes them and strengthens the weak field due to the residual magnetism of the cores which results in a gradual building up of the magnetic field. The important characteristic of this machine is its ability to furnish current at increased voltage as the load increases for it is clear from previous explanations that the greater the strength of the field current, the greater the strength of the magnetic field from pole to pole. The strength of the field current flowing through a series wound generator, and therefore the voltage across its armature is regulated by cutting out turns of the field through the medium of a multi-point switch or as may be done in the case of any type of generator, the voltage can be regulated by variation of the speed of the armature.

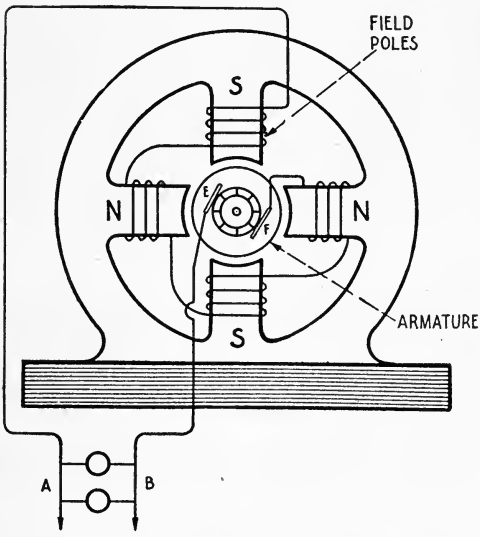

Fig. 26—Circuit of Series Wound D. C. Generator.

The *compound wound dynamo* combines the desirable characteristics of both the series and shunt wound machine, and it gives a better regulation of voltage on circuits of varying load than is possible with a dynamo of either type. A suitable diagram of connections appears in Fig. 27. The field magnets of the compound dynamo are wound with two sets of coils, one set being connected in series with the armature as shown at R, and another set in shunt to the armature and external circuit as shown at V. The function of the series winding is to strengthen the magnetic field by the current taken through the external circuit, and thus automatically sustain the voltage under variation of a load.

In the case of the shunt wound dynamo, as the external load is increased, the potential difference at the armature terminals will fall, but in the case of the compound wound generator, this fall of pressure is counteracted by the series winding, the current which flows in it increasing with the load and causing the pressure to rise. The number of turns of each winding and the relative strength of current is proportioned so that a practically constant pressure is maintained under varying load. Initial adjustments of the voltage can of course be secured by means of a field rheostat such as shown at R-1.

The student should note carefully that current must circulate in both the

series and shunt windings in the same general direction in order that the resultant magnetic fields may have the same general direction.

38. The Electric Motor.—A motor is a machine for converting electrical energy into mechanical energy. There is essentially no difference between a motor and a dynamo. Any dynamo connected to a source of electric power will run as a motor and any motor driven by mechanical power such as a steam engine, etc., will generate a current of electricity. The differences between the two machines are mainly mechanical.

The fundamental operating principle of the motor is as follows: A wire carrying a current placed in a magnetic field will tend to move in a direction at right angles both to the direction of the field and to the direction of the current. For example, if the plane of a given coil of wire lying between the poles of a magnet is parallel to a magnetic field, and a current is passed through the coil, it will tend to turn or to take up a position at a right angle to the magnetic field. If the current is reversed when it has reached this position, the coil will continue to revolve.

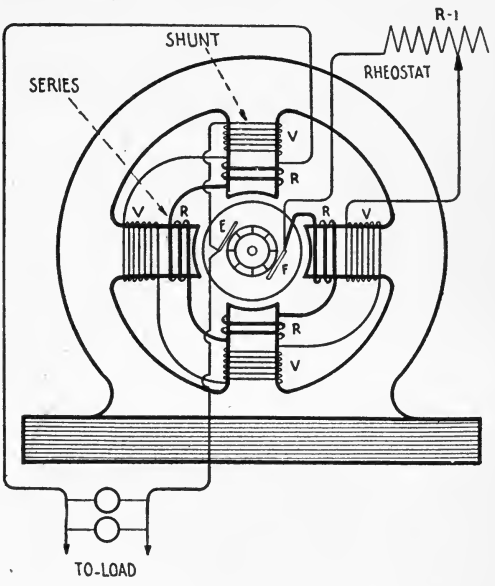

Fig. 27—Circuit of Compound Wound D. C. Generator.

The action of the motor can be simply explained by the diagram of Fig. 28 where a motor armature, commutator and brushes as well as the field poles, are represented in a conventional manner. If the terminals G, H, be connected to a source of direct current, part of the current will circulate through the field windings and part through the coils of the armature between the two brushes. If the current flowing through the armature coils bears the correct direction to that flowing through the field winding, a state of magnetism such as shown in Fig. 28 may be produced. The upper half of the armature core above the imaginary line X, will be a south pole and the lower half a north pole. The lower half of the armature will then be attracted by the south field pole and repelled by the north field pole and the upper half will be repelled by the south field pole and attracted by the north field pole. This may be stated in another way by stating that the coils of the armature tend to turn until they enclose the greatest number of lines of force from the field poles. The general strain of this attraction and repulsion is seen to be clockwise.

The movement of the armature will be continuous because the commutator acts to maintain in the same direction the flow of current through the two sides of the armature always. Consequently, the upper half of the armature will always be a south pole while the lower half will be a north pole, irrespective of the speed at which the armature revolves.

Now it would have no effect on the general direction of rotation if the connections from the source of current to the motor were reversed because the polarity of the flux in both the armature and the field poles would be reversed accordingly and because the strain of the two magnetic fields would have the same general direction the motor would revolve in the same direction as before. Careful consideration of this fact reveals that in order to change the direction of rotation of the armature, the flow of current must be reversed independently in either the armature or field poles.

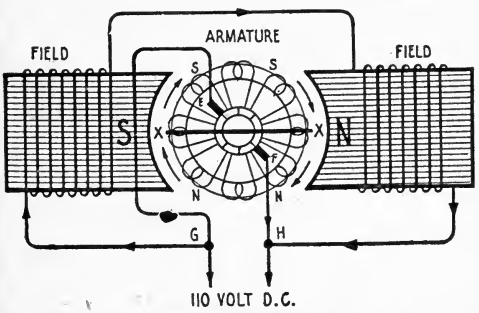

Fig. 28—Simple Diagram Showing the Attraction and Repulsion of Magnetic Fields in a Motor.

Like generators, motors may have either series, shunt, or compound wind-

ings. The type known as the differential wound motor appears in Fig. 29 and will be described further on.

39. The Effect of Counter Electromotive Force.—When a motor armature is set into motion by an external current, *the loops of wire composing its coils cut through the magnetic field and induce a reverse electromotive force counter to that which originally caused the motion.* This back pressure is known as *counter electromotive force* which governs directly the speed of a motor. The difference between the impressed and the counter voltage determines the actual flow of current in the armature and the counter voltage is proportional to the speed of the armature, the number of armature wires and the strength of the magnetic field which is enclosed.

The speed of a motor supplied with current at constant pressure varies directly with the counter electromotive force and in any given machine the stronger the field, the slower will be the speed of the armature. If the field of a motor be weakened by inserting resistance in the excitation circuit, the armature will increase its speed up to a certain point, or until the increased speed of the armature increases the counter E. M. F. to such an extent as to cut down the armature current. Up to this point, however, the speed of any given motor can be varied by simply increasing or decreasing the field strength.

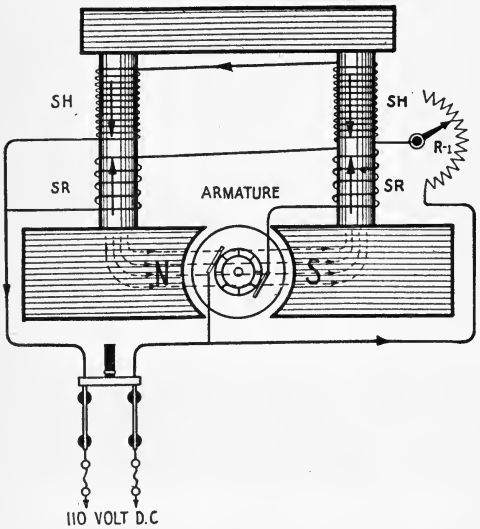

Fig. 29—Motor with Differential Field Winding.

The pull* of the motor armature is directly proportional to the strength of the armature current and to the strength of the magnetic field. In the case of the shunt wound motor where the field is of constant strength, the pull of the armature depends upon the amount of current through its winding. Hence if we weaken the field, the reduced counter E. M. F. will permit increased flow of current in the armature, and therefore, will increase its speed.

The speed of a shunt wound motor is self-adjusted in the following manner: If a load is thrown on suddenly, the armature will have a tendency to slow down, but this decreases the reverse electromotive force and therefore increases the current flowing through the armature winding. This causes the motor to return to its normal speed of rotation.

We see from the foregoing that the speed of a motor can be regulated in two ways: (1) by connecting a variable resistance coil known as a field rheostat in series with the field winding; (2) by connecting a variable resistance of large current-carrying capacity in series with the external circuit or in series with the circuit to the armature itself.

The motors of the motor generators used in wireless telegraphy are designed to permit variation of the speed 20% above and below the normal speed.

40. Motor with Differential Field Winding.—As we have explained, the speed of a motor is increased or decreased by regulation of the strength of the magnetic field and any reduction of field flux of a given machine will increase the speed of the armature. By the use of the differential field winding shown in Fig. 29, the flux of the shunt field is automatically weakened in accordance with the external load and the speed therefore self-regulated. Confining our vision strictly to the windings of the field poles, two distinct set of coils will be seen, one a series winding (SR) in series with the armature and the other a shunt winding (SH) connected across the main power line. If the current in these two windings circulates in opposite directions, a differential field is produced and the resultant field will be of greater or less intensity according to the current

*The term "torque" is applied to the twisting force produced in the armature when the current is turned on. "Torque" is the result of "pull" and "leverage."

taken by the armature. A suddenly applied load will tend to slow the armature down, and this will reduce the counter E. M. F. of the armature coils; accordingly increased current will flow through the series winding, which will reduce the counter E. M. F. to a still lower figure, permitting such increase of armature current as will restore the motor to normal speed.

Through use of the differential winding motors may be designed to give very close speed regulation and are therefore distinctly suitable to drive the A. C. generators for wireless telegraphy.

If we keep before us the fact that the counter electromotive force developed in a motor armature acts effectively as a resistance to the flow of current, and that this reverse electromotive force increases with the speed, it is easily seen that a considerable difference must exist between the armature resistance when standing still and its effective resistance when in rotation. If such a motor armature were started by connecting its terminals directly to the power mains an excessive current would flow which would do injury to the windings or the commutator. A device known as a *motor starter* is, therefore required to reduce the starting current to a safe value.

Motor starters will be treated in detail in Part IV, paragraphs 55, 56 and 57.

41. Dynamo and Motor Armatures.—Armatures may be classified with particular reference to their shapes, the two principal types being known as the *drum wound* and *ring wound* armatures. The diagram, Fig. 30, shows the general outline of the drum wound armature, the core of which is made up of a number of thin sheets of soft iron mounted on the shaft B to form the support for armature coils. The coils for the armature are placed lengthwise in slots, one coil being shown as at A, B. One terminal, A, B, is connected to a segment of the commutator and the winding continues through a slot to the rear of the armature core underneath a south pole, and returns in the case of a four-pole dynamo or motor about 90° away or underneath the north pole where the second terminal is attached to the next adjacent commutator segment. A number of these coils are connected in series, taps being brought from the terminals of each coil to the successive segments of the commutator. The iron punchings of the core 0 are insulated from one another by shellac or varnish to prevent the induction of current in the core as well as in the armature coils. A solid core would occasion great energy losses in this way.

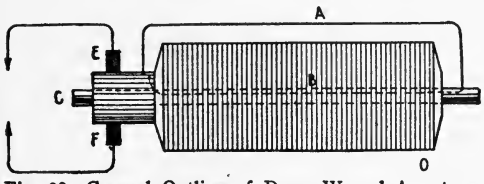

Fig. 30—General Outline of Drum Wound Armature.

An armature coil constructed of thin discs or punchings is said to be laminated. The field poles and armatures of both dynamos and motors are laminated to prevent induction losses.

In the *ring wound* armature shown in Fig. 31, the armature conductors are wound about a ring-shaped iron core, separated from one another and equally spaced, the terminals of each coil being connected to adjacent segments of the commutator. Because the conductors on the outside surface of the core only are active in cutting the lines of force, the ring wound armature is more or less wasteful and is seldom encountered in wireless telegraph installations.

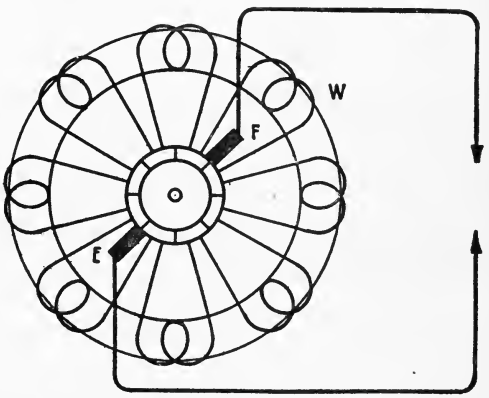

Fig. 31—General Outline of Ring Wound Armature.

42. Development of Armature Windings.—The subject of armature windings is too comprehensive to be treated in detail here. These windings are exhaustively covered in many textbooks on dynamo engineering which should be referred to for additional details. The drum

armature windings may be classed into two principal types, the *lap winding* and the *wave winding*.

The development of the lap winding is shown in Fig. 32, where a number of armature coils, numbered 1, 2, 3, 4, 5, etc., successively, are assumed to be mounted on the armature of a dynamo and to cut through the magnetic fields of the poles N, S, N, S. The arrow indicates the direction of rotation, and the letters correspond to the segments of the commutator. The position of the positive (+) brush of the armature is shown.

In this diagram, an armature having 18 conductors revolves in a four pole field and the flow of current will be observed to have the following direction. If we start from commutator segment I, the point where the current enters the armature through the negative brush, then the current flows through conductor 17, to commutator segment A, through conductors I and 6, and out at segment B. Tracing in the opposite direction, current flows through 2, through 15 to segment H, through 18 and 13 and finally comes out at G. The current is thus seen to take two paths from the negative brushes through the armature coils to the positive brushes. And it will be clear also that one side of a given armature coil lies underneath a north pole and the opposite side underneath a south pole 90° distant. The student should note carefully the direction of the flow of current in all coils of the armature winding, taking particular note of the fact that in parts of the armature, the current is flowing

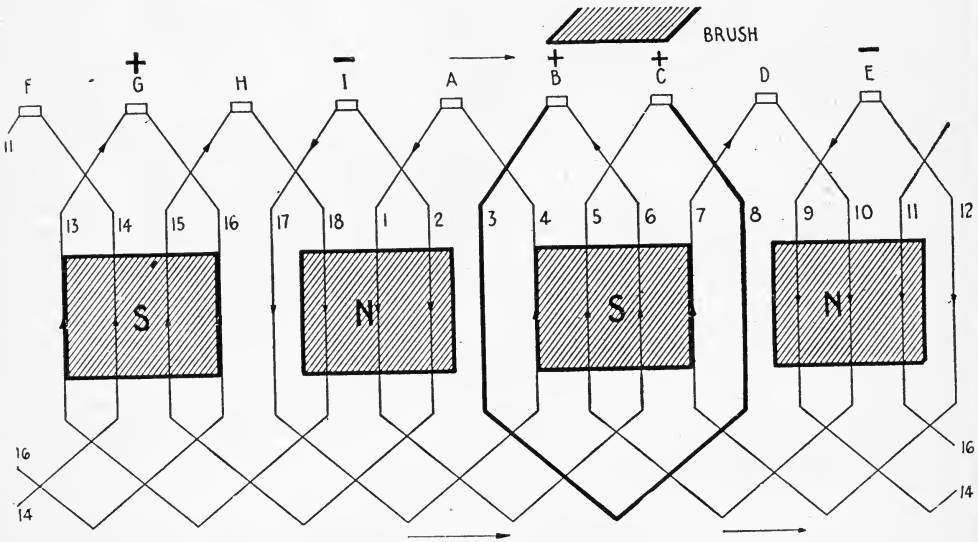

Fig. 32—Development of Lap-Wound Armature.

towards the positive brushes and in other parts, away from the negative brushes. The coils composing the armature winding are connected so that the voltage induced in one adds on to that of the next coil, hence, current flows in the same general direction through various groups of coils although the sides of a given coil are under magnetic fields of opposite polarity.

It is to be noted that the brush shown in Fig. 32 short circuits a particular coil of the armature, which lies in the neutral magnetic field. It is self-evident that if a given armature coil were short circuited by a brush when the coil occupies a position other than the neutral position, it would be surrounded by a magnetic field and current of great strength would be induced therein. This would overheat or melt the conductors or at least would cause destructive sparking at the commutator.

If the armature wiring in Fig. 32 is carefully traced out, it will be observed that the winding, so to speak, laps back upon itself. It is therefore termed the *lap winding*. In a four-pole generator, four brushes would be required for this winding and in a six-pole generator, six brushes.

In the diagram of Fig. 32 the coils of the armature are shown as consisting of a single turn of wire but they may have several turns between segments as

shown in Fig. 33 where a single coil is connected to commutator segments B and C.

Fig. 34 shows the development of the so-called *wave winding*. The path of the current is as follows: Current enters commutator segment I, continuing through conductor 17, or to segment E, continuing through conductors 9, 14, finally coming out at segment A. The current having passed through a conductor under each field pole, it returns to the commutator segment A, the one adjacent to segment I, at which it originally started. There are but two paths for the current through the armature, hence but two contact brushes are required. The majority of motors encountered in wireless work have lap wound armatures.

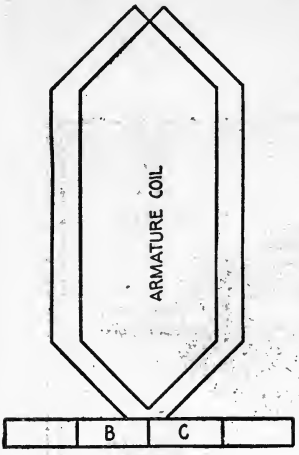

Fig. 33—Simple Armature Coil.

The general construction of a drum-wound armature is shown in Figs. 35 and 36. Fig. 35 shows a complete Crocker-Wheeler motor generator armature. It should be observed that the D. C. armature coils lie lengthwise in slots on the iron core and their terminals are soldered in slots at the end of each commutator segment. Fig. 36 shows the terminals of the armature coils placed in the slots ready for soldering. The construction of the commutator should be noted. It is made up of a number of copper bars separated by fiber insulating material.

43. The Alternating Current Transformer.—We have shown in paragraphs 28 and 29 how a varying magnetic field threading in and out of a coil of wire wound over an iron core can induce a flow of current into another coil wound about it. Mention was made of the fact that direct current flowing through the first coil must be interrupted or its strength changed periodically to induce a current in the second coil.

It is clear from Fig. 19, that the lines of force produced by winding P cut each turn in S just once, and, therefore, the pressure or electromotive force induced

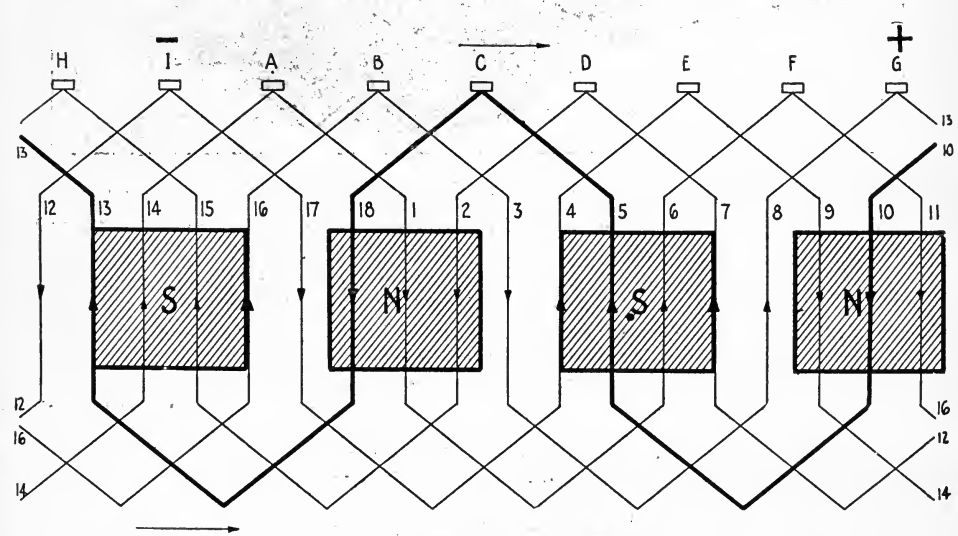

Fig. 34—Development of Wave Winding.

in winding S increases or decreases accordingly as the number of turns in S are greater or less than in P (see paragraph 31).

The apparatus built upon this principle is known as a *transformer* and the different types are called *step-up* or *step-down* with respect to the ratio of the primary and secondary turns.

The essentials of a transformer are:

(1) A primary winding;
(2) A secondary winding;
(3) An iron core.

In order that the current may be induced in the secondary of a transformer, the primary winding must be traversed by either a pulsating or interrupted direct current or an alternating current.

Fig. 35—Construction of Crocker Wheeler Motor Generator Armature.

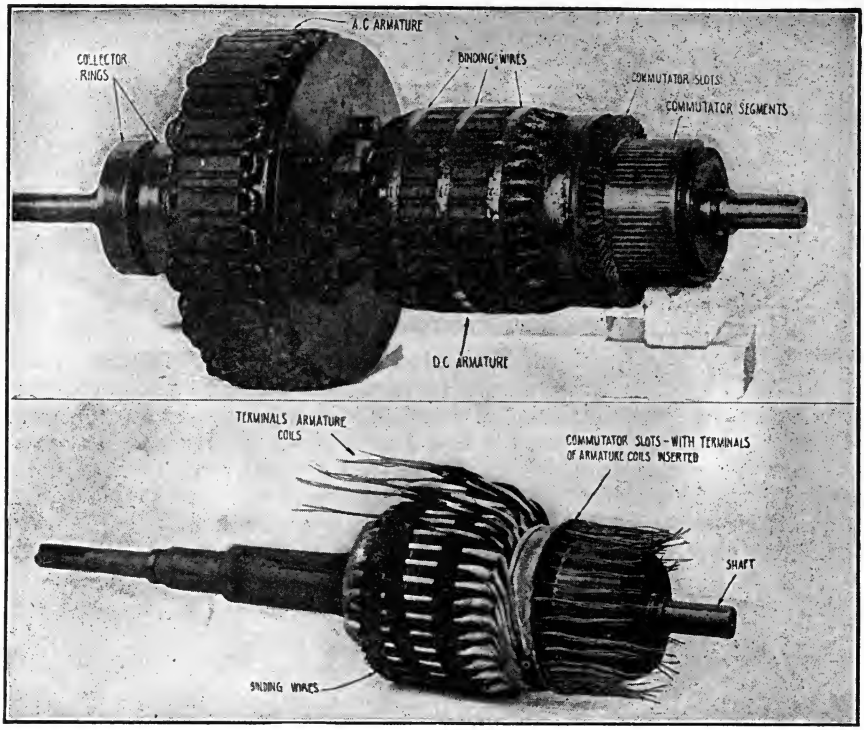

Fig. 36—Showing Crocker Wheeler Motor Armature with Coil Terminals Unsoldered.

Alternating current transformers for the production of high voltages may be broadly classified under two general types:

(1) The constant current transformer;
(2) The constant voltage transformer.

In terms of the ratio of transformation, they may be classified as:

(1) Step-up transformer;
(2) Step-down transformer.

According to the design of the coils and the core or magnetic circuit, they may be classified as:

(1) Open core transformer;
(2) Closed core transformer;
(3) Auto transformer;
(4) Air core transformer.

Fig. 37 is an elementary diagram of a closed core, step-up, constant voltage transformer. The primary and secondary windings P and S respectively, are supported by a rectangular iron core built up of strips of sheet iron. The primary winding, for example, may consist of one or two layers of comparatively coarse wire such as No. 10 or No. 12 B. & S. gauge. The secondary winding S may have several thousand turns of fine wire such as No. 30 or No. 32.

The process of transformation is as follows: The alternating current flowing from a dynamo through the primary winding P magnetizes the iron core periodically, causing a

varying flux to flow through the iron core in accordance with the alternations of current. This varying flux induces an E. M. F. in the secondary which will cause a current to flow if the secondary circuit is closed. The current in the secondary circuit flows in the opposite direction from that in the primary circuit and as it increases, it sets up a flux in opposition to that already in the core, reducing its strength. This reduces the self-induction of the primary, permitting more current to flow in the primary and in this way the transformer becomes self-regulating—a rise of the secondary current causing an increase in the primary current.

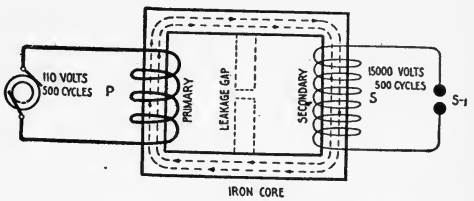

Fig. 37—Magnetic Circuit of Step-up Closed Core Transformer.

If, for example, current at 110 volts, 500 cycles, flows through winding P, the flux will alternate through the core 1,000 times per second, setting up 1,000 alternations of current in winding S. Since S consists of a great number of turns, the voltage of the current induced in S will be very much greater than the voltage of the current in winding P. In fact, it is found that the voltage in the secondary winding is almost a direct ratio of the primary and secondary turns, e. g.,

$$\frac{\text{E-s}}{\text{E-p}} = \frac{\text{T-s}}{\text{T-p}}$$

where T-p = the current in the primary;
where T-s = the current in the secondary;
E-p and E-s = the voltage in the primary and secondary circuits respectively.

Fig. 38 shows the *open core, step-up voltage, constant current transformer* employed in radio work. C, the core constructed of a bundle of fine iron wires or of sheet iron is covered with several layers of insulating cloth followed by one or two layers of coarse copper wire. An insulating tube (not shown) is placed over the primary. It is made of some material which will withstand the heat and possess the requisite insulating qualities.

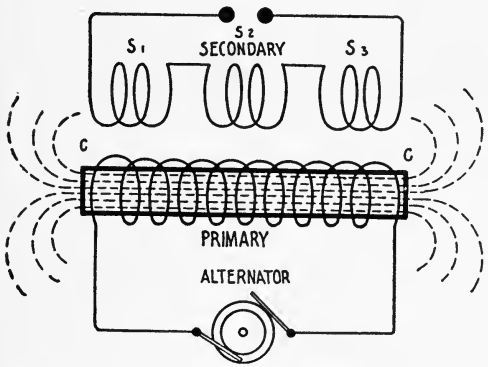

Fig. 38—Open Core Transformer.

Over this tube is placed a secondary winding which consists of several thousand turns of fine wire wound up in the form of pancakes as at S-1, S-2, S-3.

There is little magnetic reaction of the secondary upon the primary in this type of transformer owing to the lack of a continuous iron path for the flux and the self-induction of the primary therefore remains nearly constant. The transformer will draw practically the same current when the secondary is on short circuit as when it is open.

The closed core transformer can be designed to have this operating characteristic when fitted with a magnetic leakage gap shown by the dotted line, Fig. 37. Through the leakage provided by this gap, the self-inductance of the primary winding remains nearly constant under all variations of the secondary load.

Both the open and closed core transformers are employed in wireless telegraphy to generate current at voltages between ten thousand and fifty thousand volts at power inputs varying from ¼ K. W. to 500 K. W.

The ratio of transformation in the open core transformer is not exactly in proportion to the turns, due to magnetic leakage. The design is, therefore, altered to meet these conditions. Generally the secondary is given more turns than the usual transformer equation would require.

The so-called *auto transformer* with a step-up ratio of turns is shown in Fig. 39. In this type the primary and secondary windings have turns in common, a single coil being

used for both circuits. A portion of the current flowing in the secondary winding is induced by the passing of the flux through the core from the primary turns, but another portion flows into the secondary circuit by direct conduction.

Although transformers of this type are not employed for the production of high voltages (with low frequency currents), they are frequently used as step-down transformers to obtain 10 to 30 volts of alternating current from a 110-volt source. Without an iron core, auto transformers are used in the circuits of radio frequency in both the transmitting and receiving apparatus of wireless telegraphy.

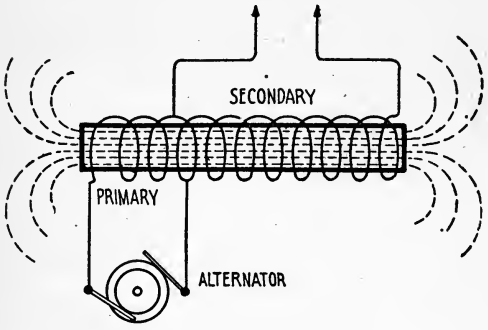

Fig. 39—Auto Transformer.

The air core transformer in Fig. 40 is used principally in radio-frequency circuits for transferring oscillations at extremely high frequencies from one circuit to another, and when used in this manner it might properly be called a *radio-frequency transformer.* For such a transformer if used in the transmitting apparatus of a radio set, winding P is made of a few turns of coarse copper tubing or copper strips, the tubing being from ½ to ¾ inch in diameter for the small size sets. Winding S may have several turns, a dozen or more of insulated wire or small copper tubing. On the other hand, if the auto transformer is used in receiving sets, winding P may consist of several hundred turns of No. 24 B. & S. wire, and winding S may have several hundred turns of No. 32 B. & S. wire.

Whether or not the voltage of the secondary circuit will be greater or less than in the primary, in radio-frequency transformation, depends upon the values of capacity included in either circuit as well as the ratio of the turns. Owing to the phenomenon of resonance and the effects of capacity, a step-up ratio of turns may be the equivalent of a step-down voltage or vice versa.

When the primary circuit of an open core transformer is supplied with interrupted direct current, it is called an *induction coil.* This coil will be described in detail in Paragraph 50.

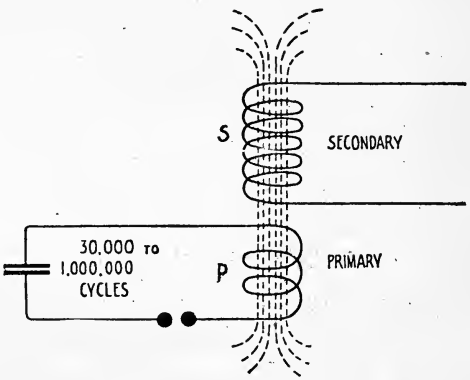

Fig. 40—Radio Frequency Transformer.

44. Electrostatic Capacity.—In order that certain phenomena involved in the flow of alternating current may be understood, it will be necessary to consider another quality of an electric circuit known as *electrostatic capacity.* We have mentioned two qualities of an electric circuit, i. e., resistance and inductance. The third quality, capacity, is of particular importance in wireless telegraph apparatus and will now be defined. Further on, we shall show how these three qualities govern the flow of an alternating current.

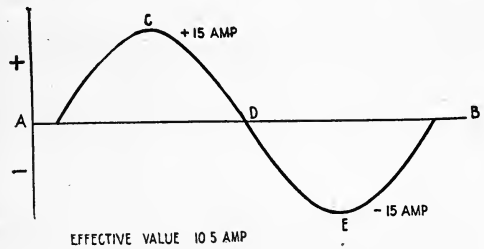

Fig. 41—Rise and Fall of Alternating Current.

Capacity may be defined as that property of a conductor or circuit by which energy can be stored up in electrostatic form. The electrostatic capacity of a conductor is measured by the quantity of electricity in coulombs with which it must be charged to raise its potential to one volt.

A device for storing up energy in the form of an electrostatic field is known as a *condenser.* When two copper sheets or other conducting material are separated by a small air space as in Fig. 42, and a source of direct or alternating current connected to the two plates, the intervening space fills up with electrostatic lines of force. If the charging source be disconnected, and the terminals of the condenser be reconnected to a galvanometer, the latter will give a momentary deflection indicating the passage of an electric current. This experiment proves that the electrostatic field within a condenser will, when released, set up a flow of an electric current.

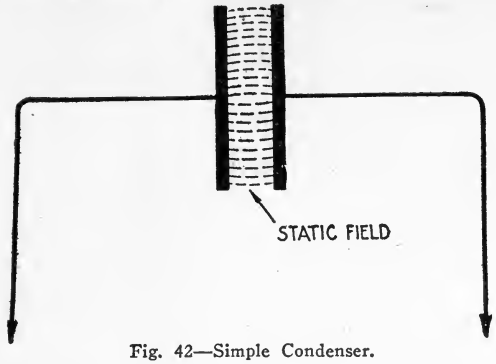

Fig. 42—Simple Condenser.

The unit for expressing the capacity of a condenser is the *farad* which is a condenser of such dimensions that one volt of electricity will store up in it a charge of one coulomb. The farad is too large for practical measurements, hence the microfarad is in general use. One (1) microfarad $= \frac{1}{1{,}000{,}000}$ farad.

The quantity of electricity that can be placed in a condenser is directly proportional to its capacity and the difference of potential between its plates, or $Q = C \times E$. Hence, a condenser of .000002 farad capacity, charged to a potential of 10,000 volts would have stored up in it $10{,}000 \times .000002 = .02$ coulomb.

When current flows into a condenser, its potential difference rises uniformly until the E. M. F. of the condenser and that of the charging source are equal. At any instant the E. M. F. of the condenser is proportional to $\frac{Q}{C}$ but since the charging process is uniform the average E. M. F. $= \frac{E}{2}$.

The work done in joules in placing a quantity of electricity into a condenser = the quantity of electricity multiplied by the average E. M. F., hence

$$\text{the work in joules} = Q \times \frac{E}{2}$$

$$\text{Since } Q = E \times C$$

$$\text{therefore } W = E \times C \times \frac{E}{2} = \frac{C\,E^2}{2}$$

Where W = the work in joules.

Now if a condenser is charged N times per second, the power is expressed:

$$P = \frac{C\,E^2}{2} \times N$$

Where N = the number of charges per second;
C = the capacity of the condenser in farads;
E = the potential difference in volts.

Hence if a condenser of .002 microfarad capacity were charged to a potential of 30,000 volts by a 500 cycle alternator, the power expended in watts would be:

$$\frac{.000000002 \times 30{,}000^2}{2} \times 1{,}000 = 900 \text{ watts.}$$

A condenser of concentrated capacity always consists of:

(1) **Two or more opposing surfaces;**

(2) **An insulating medium between the plates which may be air or any of the well-known insulating materials, such as glass, micanite, hard rubber, waxed paper, etc.**

This medium is known as the *dielectric.* The capacity of a condenser is found to vary:

(1) Directly as the area of the opposed surface and the ability of the dielectric to conduct electrostatic lines of force;

(2) Inversely as the separation of the plates.

This may be written:

$$C = \frac{K \times A \times 2248}{T \times 10^{10}}$$

Where C = the capacity of the condenser in microfarads;
A = the area of the opposed surfaces in squares inches;
K = a certain constant;
T = the separation of the opposed surfaces, or the thickness of the di-electric.

It can be proven that different di-electric mediums conduct static lines of force with more or less ease depending upon their nature. Air is taken as unity and all other insulating mediums are compared to it. Certain grades of glass are said to have a dielectric constant of 9, meaning that a condenser with a plate of glass between conducting surfaces will permit 9 times the quantity of electricity to be stored up as with air at ordinary pressure. In the same way, the dielectric constant of micanite is said to be 5, paraffin paper 2, etc. (Note complete table in the Appendix).

Condensers of large capacity are made by taking a number of sheets of tin or brass foil and separating them with thin sheets of waxed paper or other insulating material, alternate sheets of foil being connected together on either side, so there is no direct connection between them. This constitutes a condenser of concentrated capacity which may store up temporarily considerable amounts of energy in electrostatic form.

Condensers may be classified with respect to their dielectric strength which may be defined as the ability of the dielectric to resist puncture when subjected to electric pressure. Condensers which will withstand high voltages without rupture of the dielectric are termed *high potential condensers* and conversely those which will withstand low voltages only are called *low potential condensers.* High voltage condensers are used in circuits of several thousand volts pressure. Low voltage condensers are employed in circuits of less than 500 volts pressure.

We have mentioned that a condenser when first connected to a charging source, has zero potential, and as the current flows, the potential difference rises until the voltage of the condenser is equal to voltage of the charging circuit; the flow of current then stops. If the applied potential is decreased, the condenser will start to discharge and current will flow out in the opposite direction to which it was charged. The voltage of the condenser is thus seen to set up a back pressure which tends to drive the charging current back.

We have already seen how inductance tends to prolong the flow of current in a circuit and we now see that the condenser tends to extinguish it or drive it back. *Thus the back pressure of the condenser opposes that set up by an inductance coil.* We shall now see how these counter E. M. F.'s govern the flow of alternating current.

The effects of self-inductance will first be noted.

45. Reactance and Impedance.—When a coil of wire is connected to a source of direct and then to a source of alternating current of the same voltage, the flow of current (in amperes) will be considerably greater with the former connection than with the latter. This is due to the fact that the counter E. M. F. of self-induction in a direct current circuit is only momentary, the effects being observed when the current is turned on and off, whereas in a circuit carrying alternating current, the effects of self-induction are continuous and the back pressure resulting therefrom must always be considered to determine the strength of current.

The flow of a direct current through a given circuit is opposed only by the ohmic resistance, but the flow of alternating current is impeded by the counter electromotive force of self-induction as well as by the ordinary resistance. The

extra resistance of self-induction is termed *reactance,* and is expressed in equivalent ohms. The combined opposition of reactance and resistance in any circuit is termed *impedance,* and accordingly the flow of current through a circuit carrying alternating current is governed by the impedance and not alone by the ohmic resistance. It should be understood that the counter E. M. F. of self-induction entails no loss of energy in an electric circuit as does resistance (where the energy is lost in the form of heat), but a higher voltage is required in that circuit to force a given value of current through it.

The flow of alternating current is nearly always controlled by coils of high self-induction which are termed *reactance coils* or *"choking" coils.*

The reactive pressure occasioned by a circuit loaded with inductance is termed *inductance reactance.* It is expressed:

$$\text{Reactance} = 6.28 \times N \times L$$

Where N = the frequency in cycles per second.
L = the inductance in henries.

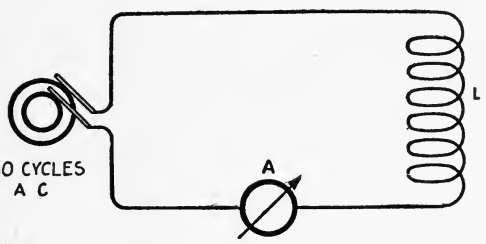

Fig. 43—Alternating Current Circuit with Concentrated Inductance.

If the coil L of Fig. 43 has inductance of .055 henry, and it is connected to a 60-cycle alternator, the inductive reactance $= 6.28 \times 60 \times .055 = 20$ ohms. If the frequency be increased, the reactance (in ohms) increases in the direct ratio; thus if N = 100,000 cycles, the frequency of a radio-frequency alternator, then the reactance of coil L = 34,540 ohms.

The flow of current through L is governed both by the reactance and the resistance, and the impedance of such a circuit is expressed as follows:

$$\text{Impedance} = \sqrt{R^2 + X^2}$$

Where R = the resistance of the coil in ohms;
X = the reactance of the coil in ohms.

Then if the coil L of Fig. 43 had inductance of .055 henry, resistance of 10 ohms and reactance of 20 ohms, then

$$\text{Impedance} = \sqrt{20^2 + 10^2} = 22.3 \text{ ohms approximately.}$$

For direct or continuous current, Ohm's law is expressed $I = \frac{E}{R}$, but for alternating current the formula is modified to, $I = \frac{E}{Z}$. If the pressure of the alternator is 110 volts, then there will flow through L, $\frac{110}{22.3} = 4.9$ amperes nearly.

46. Capacity Reactance.—We have shown how a condenser connected in series with an alternating current circuit acts as an effective resistance and exerts a back pressure on the charging E. M. F., and also that this back pressure opposes that set up by inductance. To distinguish these counter E. M. F.'s, the reactance occasioned by inductance is expressed as *positive reactance* and that by a condenser as *negative reactance.*

The capacity reactance of a condenser is determined as follows:

$$\text{Capacity reactance} = \frac{1}{6.28 \times N \times C}$$

Where N = the frequency of the current in cycles per second;
C = the capacity of the condenser in farads.

The important point to be noted from this formula is that a large condenser will have a small value of reactance and conversely a small condenser will have a large value of reactance.

If the condenser C connected in series with the 60 cycle alternator of Fig. 44 has capacity of .00013 farads, and the frequency of the alternator is 60 cycles, then

$$\text{Capacity Reactance} = \frac{1}{6.28 \times 60 \times .00013} = 20 \text{ ohms approximately.}$$

If the frequency of the alternator is 100,000 cycles, then,

$$\text{Capacity Reactance} = \frac{1}{6.28 \times 100{,}000 \times .00013} = .012 \text{ ohms.}$$

It is clear that by proper selection of capacity and inductance values in the alternator circuit of Fig. 45, the counter electromotive forces can be made to balance and the reactance therefore reduces to zero, or $2\pi N, L = \frac{1}{2\pi N,C}$

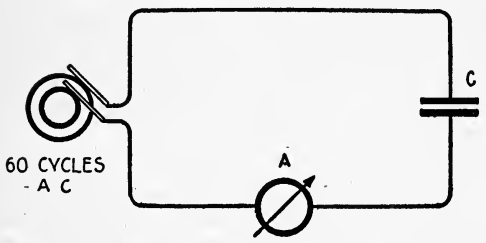

Fig. 44—Alternating Current Circuit with Condenser in Series.

The circuit then acts as if neither inductance or capacity were present and the flow of current is governed solely by the ohmic resistance of the circuit.

If capacity reactance overbalances inductance reactance, then the resultant value takes the notation of the predominating figure, e. g., if the capacity reactance exceeds the inductance reactance, the difference between the two will be expressed in ohms, and the circuit said to have so many ohms capacity reactance. In case inductance reactance predominates, the opposite statement applies. We see from all this that a much greater current can be made to flow through the circuit from the alternator by the use of a condenser and a coil than if but one of these were used.

Reviewing the foregoing, it is clear that the reactance of a given coil for frequencies in excess of 100,000 cycles per second (as compared to lower frequencies) may attain a rather large value. It is therefore necessary in such circuits to insert a certain amount of concentrated capacity to build up the current. In the radio-frequency circuits of wireless telegraph apparatus, current flows at frequencies between 20,000 and 1,000,000 cycles per second and if this current is to be transferred by magnetic induction from one circuit to another, the second circuit must contain a certain amount of inductance and capacity of such values that inductance reactance and capacity reactance neutralize one another. The second circuit is then said to be resonant to the impressed frequency and the flow of current is governed solely by its resistance.

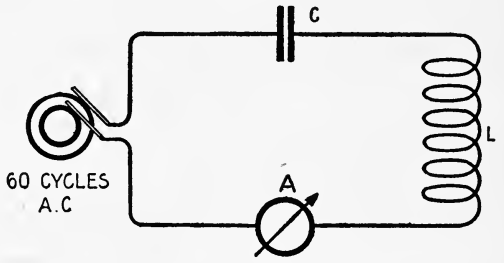

Fig. 45—Showing How Resonance Is Obtained in Alternating Current Circuits.

Straight wires possess both capacity and inductance, which are said to be *distributed* rather than *concentrated* as in the case of a condenser or a coil of wire. The laws of electrical resonance, in general, apply to such circuits as well as those having concentrated capacity and inductance.

47. Lag and Lead of Alternating Current.—A certain phenomenon, involved in the flow of alternating current throughout a given circuit, is termed *phase displacement.* Given a circuit in which inductance reactance predominates, it is found that when a given alternating electromotive force is applied thereto, the pressure and current do not reach their maximum values simultaneously. The current lags behind the impressed voltage by a certain degree dependent upon the self-induction of the circuit and such a circuit is said to have a *lagging phase.*

As it is convenient to express a complete cycle of current in terms of the degrees of a circle, ¼ cycle being equivalent to 90°, ½ cycle to 180°, and so on, we express the lag of the current in terms of the degrees of the circle. Hence, a certain circuit is said to have

an angle of lag of 35° or some other degree dependent upon the constants of the circuit. (All this is explained in any strictly theoretical text book on alternating current).

In a circuit wherein capacity reactance predominates, the opposite condition is obtained, e. g., the current leads the voltage reaching its maximum value before the impressed E. M. F. A circuit of this type is said to have a leading phase.

The point to be brought out here is that in circuits having either lead or lag, the actual power consumption in watts cannot be determined from the reading of a voltmeter or ammeter. To illustrate: When a voltmeter or ammeter are connected in the primary winding of a high voltage transformer of the type used in wireless telegraph transmitters, the voltmeter may indicate 110 volts and the ammeter current strength of 14 amperes. Applying the power formula in simple form the apparent reading in watts would be $110 \times 14 = 1{,}540$ watts, but a wattmeter connected in this circuit may indicate a reading of 1,000 watts which is the *true reading* because the wattmeter is constructed to read correctly independently of the degree of phase displacement. The result obtained by multiplying the pressure by the current is only an apparent reading of watts; but the true reading is always obtained by the meter. The ratio of the *true watts* to the *apparent watts* is expressed by the term, the *power factor.* In the circuit taken as an example, the power factor $= \frac{1000}{1540}$, or approximately 65%.

The power factor can also be obtained from the ratio of $\frac{R}{Z}$, that is if the impedance and resistance are known, and the value of the former is divided by the latter, the power factor of the circuit is obtained.

The formula for power in direct current circuits, $W = I \times E$ is changed in the case of an alternating current circuit wherein the current lags behind the voltage to read: $W = I \times E \times \text{Cos. } \phi$.

The cosine ϕ is the power factor expressed as a function of an angle of a circle and as mentioned, is equal to $\frac{R}{Z}$. Hence if the total resistance of a given circuit is known, also the total impedance and the reading of current and E. M. F. is obtained by an ammeter and voltmeter respectively, we can determine the true power in watts in any circuit without the use of a wattmeter.

48. Effective Value of Alternating E. M. F. and Current.—It is self-evident from the alternating current curve of Fig. 41 that the current constantly changes in value as well as reversing its direction. Hence, to express the *effectiveness* of a given electromotive force in such circuits, we must employ some value other than the maximum E. M. F. or maximum current per alternation. Take, for example, any given circuit in which the maximum current for each alternation amounts to 15 amperes (as in Fig. 41), it is evident that at all points off maximum during the complete cycle, the strength of the current is less than 15 amperes. It is clear that we must take some sort of an average value in order to determine the effectiveness of an alternating current. Since the heating effects of direct current in a given circuit are uniform, the effectiveness of an alternating current is expressed in terms of the strength of a given amount of direct current which would produce the same power or heating effect. To illustrate: If 15 amperes of direct current pass through a resistance of 2 ohms, the power of the current converted to heat will be $I^2 \times R = 15^2 \times 2 = 450$ watts. Now if we pass an alternating current through the same wire and adjust its strength until 450 watts are consumed in the form of heat, we would then have 15 amperes of alternating current flowing.

This is the so-called effective value of the alternating current which in the case of a sine wave curve is found to be .707 of the maximum value per alternation. Suppose, the maximum value of current per alternation in the curve of Fig. 41 is 15 amperes. then the effective value will be $15 \times .707 = 10.5$ amperes. That is, the current rises and falls uniformly between a value of +15 amperes and −15 amperes producing the same heating effect as a direct current of 10.5 amperes. Now an ammeter connected in such a circuit would indicate 10.5 amperes because these instruments are constructed to indicate the effective value of current and not the maximum value per alternation. Similarly, voltmeters indicate the effective voltage in a given circuit. All this means that the maximum voltage per cycle of an alternating current supplied from power mains at

pressure of 500 volts, is somewhat greater, in fact, is 500 × 1.41 = 705 volts. Similarly the maximum voltage per alternation in 110 volt alternating current circuits is 155 volts. (This is only true when the wave form of the current follows the curve of sines.)

When speaking of the pressure of the high voltage transformers used in wireless telegraphy, the secondary voltage is generally given as the maximum voltage per cycle and not the effective value.

The student will see from the foregoing that the problems of alternating current circuits are largely different than those of direct current circuits and that the flow of current is governed by conditions other than the ohmic resistance. Also the actual power consumption in watts depends upon whether or not the pressure and current in a given circuit are in exact phase.

49. Measuring Instruments or Electric Meters.—The principle measuring instruments employed in connection with a wireless telegraph transmitter are:

(1) The voltmeter;
(2) The ammeter;
(3) The wattmeter;
(4) The frequency meter;
(5) The hot wire ammeter.

In the circuits of a radio-transmitter, these instruments occupy the positions following: The voltmeter is joined across the terminals of the alternator; the ammeter is connected in series with the primary winding of the transformer; the wattmeter is connected in the circuit from the alternator to the transformer; the frequency meter is shunted across the terminals of the alternator; the hot wire ammeter is used principally in circuits of radio-frequency, and to some extent, in circuits of lower frequency.

Before entering into a description of these meters, we shall explain the workings of the current-detecting instrument know the *galvanometer.* This instrument may take one of several forms, but the type shown in Fig. 46 is the least difficult to understand. A rectangular coil of several turns of copper wire D is suspended between the poles of a horse shoe permanent magnet, P, P. Between the poles is the stationary iron core C.* The coil is suspended from the screw F and the current to be measured enters at the wire A and leaves by the wire B. When current is passed through the coil B, it tends to turn so as to include the greatest number of lines of force but is resisted by the torsion of the suspending wires. If a pointer and suitable scale are attached to this coil, comparative readings of the strength of current may be made. Instruments of this construction are sensitive and will easily measure a current of .000001 of an ampere. It is an important instrument to demonstrate the elementary principles of electromagnetic induction, and should be a part of all students' equipment.

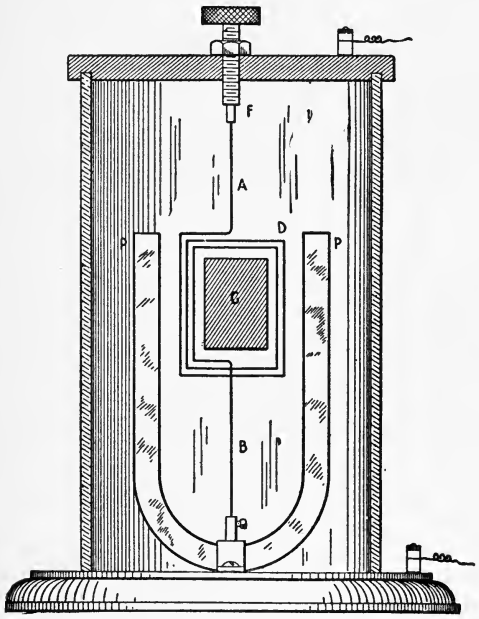

Fig. 46—Simple Galvanometer.

Now if the coil D had several thousand ohms resistance, the galvanometer might be calibrated in volts and employed as a voltmeter. If, on the other hand, coil D were wound with a few turns of relatively coarse wire, it might be calibrated in amperes and would, therefore, be known as an ammeter. As an ammeter it would be connected in series with the circuit under measurement.

*The Core C intensifies the field across the air gap P to P.

(*a*) The *voltmeter* may be constructed along the lines of galvanometer. A simple drawing of the Weston voltmeter appears in Fig. 47.

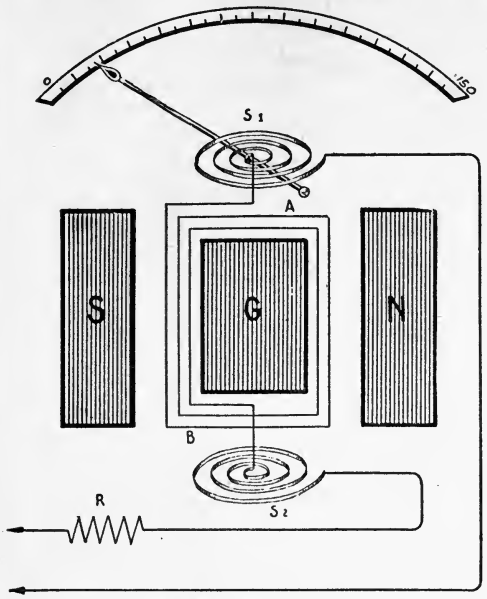

Fig. 47—Mechanism of Voltmeter.

A rectangular coil of fine wire, A, B, is mounted on the metal bobbin G. It is supported by jewelled bearings and held in the zero position of the scale by the spiral springs, S-1 and S-2, through which the circuit of the coil is completed. When the pointer is in zero position, the coil rests at a slight angle to the pole pieces of a permanent magnet, N, S. When current is flowing through the coil, the normal field from N to S is "lengthened" out and in trying to "shorten" themselves, the lines of force actually "twist" or turn the coil. When the tension of the spring is equal to the pull of the magnetic field, the pointer comes to rest and the reading of the instrument may then be observed. An external resistance coil, R, is connected in series with the winding of the bobbin to reduce the flow of current to a minimum value. This coil may have resistance of 100,000 ohms and may be provided with two taps making the meter a double scale instrument.

There is essentially no difference in the construction of the *ammeter* and the voltmeter except the resistance of the windings and the calibration. The coils of the ammeter have relatively low resistance whereas the voltmeter as already mentioned, has high resistance.

The windings of an ammeter may be proportioned to carry a small amount of current, but the meter can be used to measure very large values by connecting its terminals across an external shunt as in Fig. 48. This shunt consists of a number of metal strips of comparatively low resistance stretched between two large copper lugs. A potential difference exists across the terminals of the shunt which causes a certain amount of the current to subdivide and flow through the meter. An increase of current through the shunt will increase the flow of current through the instrument, and the meter, therefore, may be calibrated to read very large values of current, although but small values pass through the instrument itself. Such instruments are generally supplied with a certain length of connecting leads between the shunt and the instrument. The length of these leads must not be altered or the calibration of the instrument will be interfered with. In electrical diagrams, both the voltmeter and the ammeter may be designated by the symbol of Fig. 49.

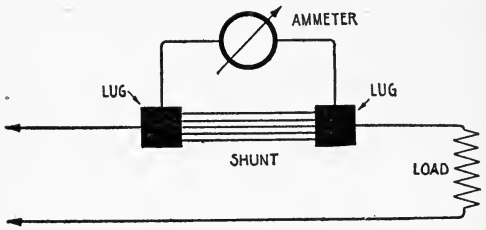

Fig. 48—Showing the Use of a Shunt with an Ammeter.

One type of meter for use in alternating current circuits is shown in Fig. 50. Coil W is a spool of wire with several layers like the winding of an electromagnet. The shaft carrying the pointer P has the semi-cylinder of iron A surrounded by the brass cylinder B. Outside B is another semi-cylinder of iron C. When current is flowing through the coil W, the semi-cylinder A tends to move into the unfilled space of C, but is resisted by the spiral springs S.

If coil W is wound with fine wire and has a coil of high resistance connected in series, it is a voltmeter, but if W has a coarse wire winding, the instrument becomes an ammeter.

(*b*) The *wattmeter* is a positive necessity for determining the power flowing

in an alternating current circuit because, as already explained, the product of the volts multiplied by the amperes does not give the true reading of watts. Due to the self-induction of the circuit, the E. M. F. and current do not reach their maximum values simultaneously. The current in fact, lags behind the impressed E. M. F., and therefore the product of volts multiplied by amperes gives what is known as an *apparent reading of watts.* This lagging of the current behind the E. M. F. is known as *phase displacement.*

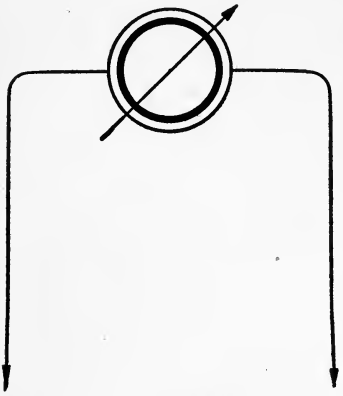

Fig. 49—Symbol for Measuring Instrument.

Wattmeters are constructed to be independent of phase displacement and they will give true readings of power consumption over the range for which they are designed. *The student will always recognize the wattmeter by it having four binding posts; two very large binding posts which are connected in series with the apparatus under measurement and two small binding posts which are connected in shunt to the terminals of this apparatus.*

The general design for this instrument is shown in Fig. 51. Coil A, called the *current coil,* is connected in series with the load; coil B, called the *voltage coil,* is connected in shunt to the load but a large resistance R is connected in series. The position of the coil A is fixed, but coil B is mounted on bearings and fitted with a pointer P which is held in the zero position by a spiral spring S. When current is passed through these two coils, two magnetic fields are set up, which act mutually to pull the movable coil B parallel to the coil A.

The current in the pressure coil will vary as the potential difference between its terminals and the current through the series coil will vary as the current in the circuit in which it is inserted. The force acting upon the movable coil will be proportional to the product of the current and potential difference. That is, the deflection of the coil is proportional to the power of the current flowing in the circuit, and the scale of the instrument may be calibrated directly in watts. In the diagram binding posts C, C, are for the current coil, and posts L, L, are for the pressure coil.

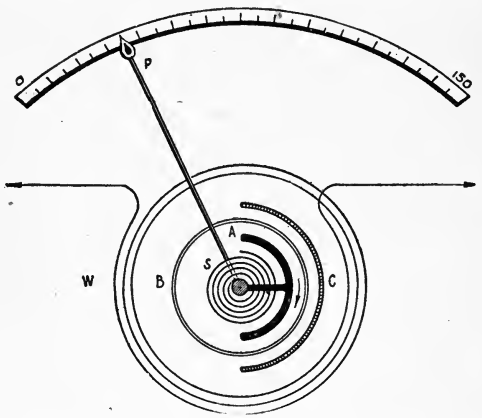

Fig. 50—Mechanism of Alternating Current Ammeter.

(*c*) *Frequency meters* are not extensively supplied to commercial wireless telegraph sets, but one of these instruments is always a part of the radio inspector's testing equipment. The Hartmann & Braun meter is shown in Fig. 52. It has much the appearance of a voltmeter, and, like that instrument, it is connected in shunt to the terminals of the alternator.

In this diagram the single elongated magnet winding M has joined in series with it the coil R; the two terminals E, E are shunted across the circuit under measurement.

The soft iron piece, P, P, completes the magnetic circuit for the poles of the horse-shoe magnet, N, S, N, S, etc. A number of small vibrating reeds are placed directly in the path of the flux between the soft iron piece and the poles of the magnet. Each of these reeds have a different period of mechanical vibration and, consequently, are only set into vibration by the flux of the magnet when it alternates at such rates as to correspond to the natural mechanical period of the reed.

Four permanent horse-shoe magnets, N, S, N, S, etc., keep the core in a constant

state of magnetization, but when alternating current flows through winding M, the reed having a natural period corresponding to the particular frequency of the current flowing will be set into violent oscillation. The scale reading corresponding to this particular reed is the frequency of the circuit under measurement. The instrument will perhaps be better understood from the side elevation, Fig. 52. Frequency meters of this type are very accurate.

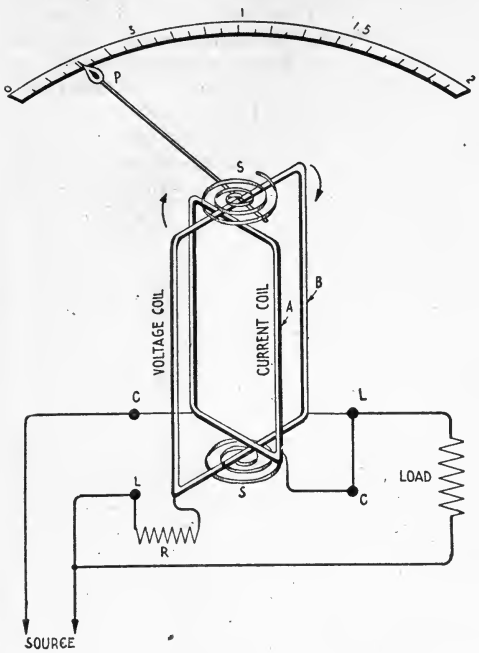

Fig. 51—Mechanism of Wattmeter.

(*d*) The mechanism of one type of *hot wire ammeter* is shown in Fig. 53. Meters of this construction are particularly suitable for measurement of the current at radio-frequencies. It should be self-evident that measurement instruments having bobbins or coils of wires are totally unsuited to this work, first, because the current of high voltage and high frequency would burn out the coil, and, second, the length of the windings would seriously affect the oscillating properties of the circuit. The self-induction of the hot wire in a hot wire meter is practically zero, and therefore there is no danger of burn-out or short circuit.

In the diagram, Fig. 53, a steel plate P is made to pull against the wire C, D, by the spring S-1. One end of the wire C, D is attached to the plate P, passed about the pulley K, and again attached to P at point R where it is insulated. The pulley K carries the arm S with two prongs between which is stretched a silk thread T wound around the shaft X. X carries the pointer P^1, which moves over the scale.

The current to be measured enters the wire at point A and leaves at the shaft K; as the current flows, the temperature of the wire rises, causing it to expand, but owing to the tension of S-1, the slack is taken up at the side and equilibrium can be restored only when the pulley K rotates sufficiently to equalize the pull on the spring. The rotation of K carries S with it, and S in moving causes the silk fiber to rotate the shaft which carries the indicating needle.

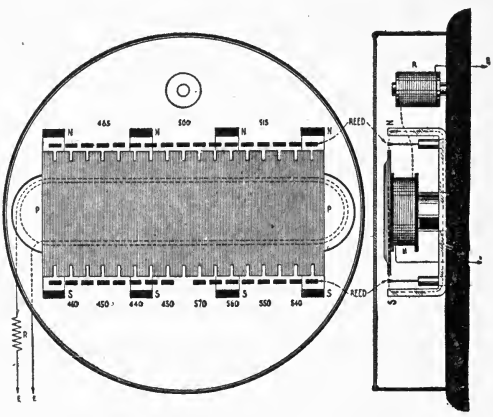

Fig. 52—Mechanism of Frequency Meter.

When the hot wire ammeter is used to measure large values of current, a shunt must be supplied to sub-divide the current flow, but an inductive shunt, even with one-half a turn of wire cannot be employed to measure current at radio-frequencies because the inductance of the shunt would vary with each change of frequency. Consequently, hot wire meters are constructed after the design of Fig. 54, where several resistance wires are stretched in parallel between two large copper blocks, B, B^1. All of these wires are of small diameter, such as No. 36 or No. 40 B. & S. gauge, hence they offer practically the same resistance to current of radio-frequency as to a direct current; that is, irrespective of the frequency of the current, the reading in amperes will be accurate. One of the wires, C, D, is selected to work the indicating mechanism in the

following manner: A wire, E, F, is attached to the center of C, D, and a silk thread attached to it at K, which is wound about the shaft in such a way as to work against the tension of the spring S which, normally, would cause the pointer to move to the full scale position. However, by means of the thread, it is drawn to the zero position of the scale. When current is flowing through C, D, the expansion of the wire releases the pull of the thread which allows the pointer to move across the scale according to the degree of expansion and the tension of the spring.

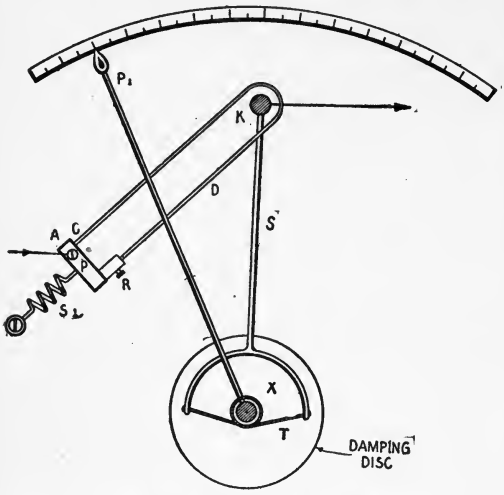

Fig. 53—Mechanism of Hot Wire Ammeter.

The fundamental principle of another instrument for measuring radio-frequency currents, used by the Marconi Company, is shown in Fig. 55. The complete details for construction are not opened for publication, but briefly, the operation is as follows: The current of radio-frequency flows through several wires stretched between blocks B and B^1. A thermo-couple mounted on one of these wires as indicated at C, D, is heated by the current of radio-frequency flowing between the copper blocks. As is well known, this junction sets up a direct current which flows through the meter A. The latter is a sensitive direct current instrument with magnetic windings and is calibrated directly in amperes.

The production of E. M. F. by a thermo-couple may be better understood from Fig. 56. If a piece of bismuth B and antimony A be soldered or welded together and their ends connected to a galvanometer, then if the temperature of the junction is raised higher than the remainder of this circuit, a current flows in the external circuit from antimony to bismuth. If the junction is cooled below temperature of the rest of the circuit, current will flow in the opposite direction. There are a number of other metals which when joined and heated will produce a direct E. M. F. under change of temperature, notably copper and iron, which are frequently used as a thermo-junction.

50. Induction Coil.—We have shown how an alternating current can be raised to a pressure of several thousand volts by means of the alternating current transformer. In a somewhat similar manner, a direct current of low voltage can be changed to an alternating current of many thousand volts by an apparatus known as an *induction coil.*

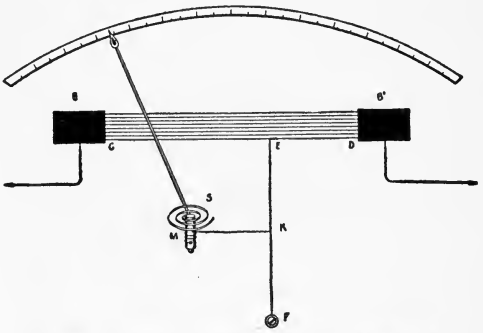

Fig. 54—Hot Wire Ammeter with Internal Shunt.

Fig. 57 is a diagrammatic sketch of an induction coil. P is the primary winding and S the secondary winding. B is a piece of spring brass fitted with a soft iron button that may be attracted by the core C. A is an adjustable thumb screw, platinum tipped, which makes contact at C^1, closing the circuit of the battery through winding P. In practice solenoid S is wound about C.

When the battery circuit is closed at K, the core becomes saturated with magnetism and attracts the armature B. B being drawn to the end of the iron core, the flow of current is broken at C^1. Since the current is now cut off from P the magnetic field disappears and the tension of the spring causes the circuit to be closed again at C^1. This process is repeated continuously, resulting in from 30 to 100 breaks per second.

The coil P generally has 1 or 2 layers of coarse insulated copper wire of different sizes (the size varying with the current) which are thoroughly insulated from the core C. Winding P is covered with an insulating tube which supports winding S. The secondary winding may have many thousand turns of very fine wire which are wound in the form of pancakes and connected in series. Thus the electromotive force at the terminals of winding S may be as great as 150,000 volts when the pressure of the current through P is 20 to 30 volts.

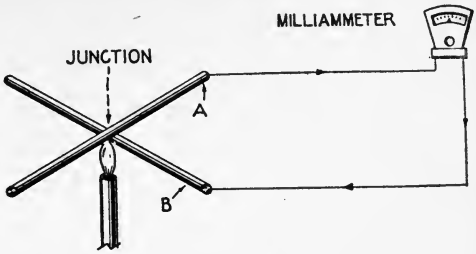

Fig. 56—Production of Thermo-Electric Current.

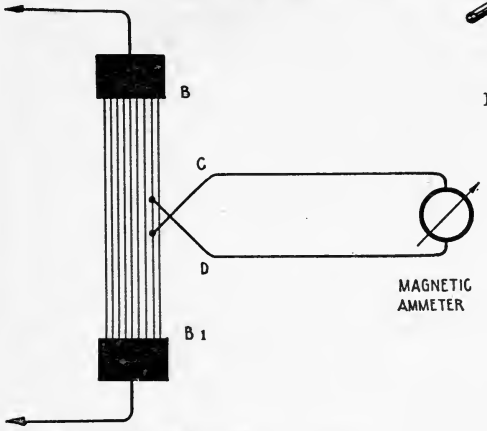

Fig. 55—Aerial Ammeter with Thermo-Couple.

The student should note that, although the interrupted direct current in winding P induces an alternating current in the winding S, the induced pressure (in winding S) is considerably more intense at the "break" of the primary current than at the "make." This is due to the more rapid change of flux threading through the winding S when the lines of force collapse than when they rise; in other words, it requires a longer period to saturate the iron core with lines of force than to empty it. The wave form of the induced current is shown in Fig. 58.

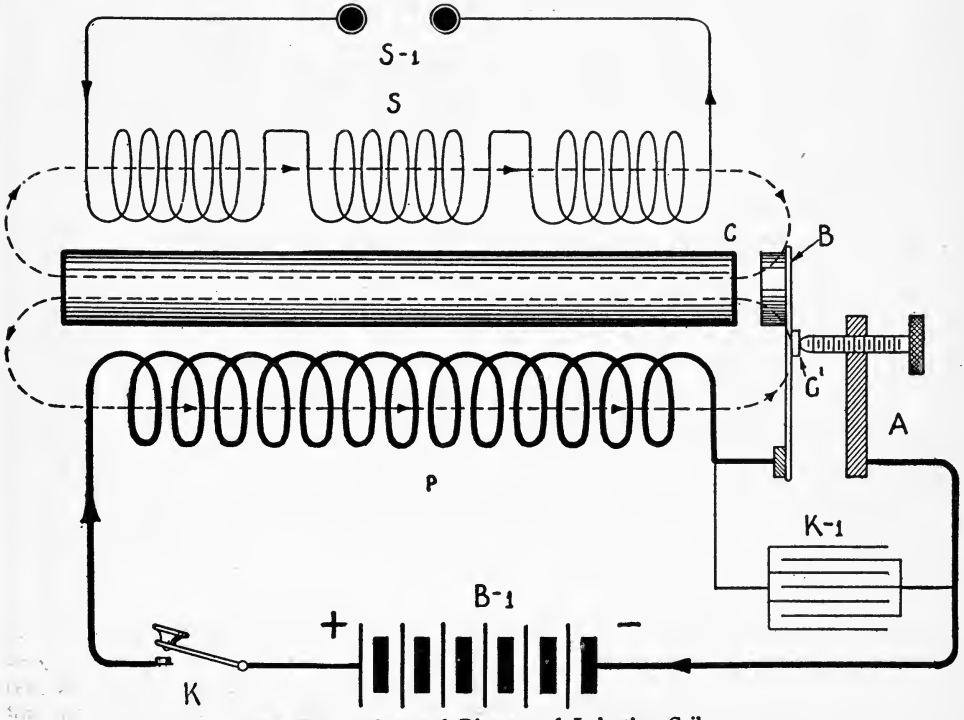

Fig. 57—Fundamental Diagram of Induction Coil.

(*a*) *Interrupters.* In addition to the magnetic interrupter shown in Fig. 59 there are several types of interrupters for induction coils, but since they are seldom used in modern wireless systems, they will not be described. The electrolytic *interrupter* is frequently employed but not extensively. A diagram of connections and a sketch is shown in Fig. 59.

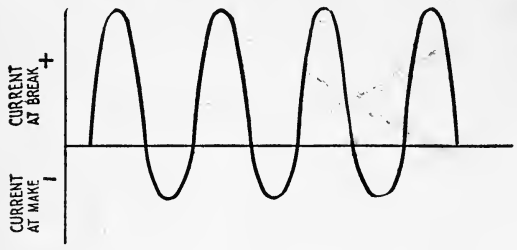

Fig. 58—Wave Form of Secondary Induced Currents.

A lead plate of convenient size is immersed in a dilute solution of sulphuric acid together with a platinum electrode covered with a porcelain sleeve. The amount of platinum exposed to the action of the acid is closely regulated according to the conditions of the circuit. When the interruptor is connected in series with the primary winding of the induction coil the action is as follows: The current flowing through the solution from platinum point to the lead plate sets up an electrochemical action which form a gas bubble on the tip of the platinum electrode. This gas bubble insulates the platinum exposed, thereby opening the primary circuit. The current flow having discontinued, there is nothing to sustain the gas bubble, which accordingly collapses again, allowing the current to flow through the winding, when the above action is repeated. A rather high rate of interruption is thus secured which induces a rapidly pulsating current in the secondary winding. Interrupters of this type frequently give 1,000 breaks of the primary current per second of time. They will not function well on potentials less than 80 volts direct current. Fair results are obtained with alternating current.

51. Practical Electric Circuits.—With the sole purpose of conveying to elementary students an idea of the wiring and certain fundamental facts surrounding practical electrical circuits, a few examples are herewith appended. In the circuit of Fig. 60, direct current at pressure of 110 volts enters at the terminals A, B, flows through the fuses F, F, through the switch blades D, D, and thence on to the bank of lamps assumed to consist of 8 lamps connected in parallel or in shunt to the terminals of the power line. If the lamps have resistance each of 220 ohms, one-half ampere will pass through the individual lamps; hence, 8 lamps will pass 4 amperes.

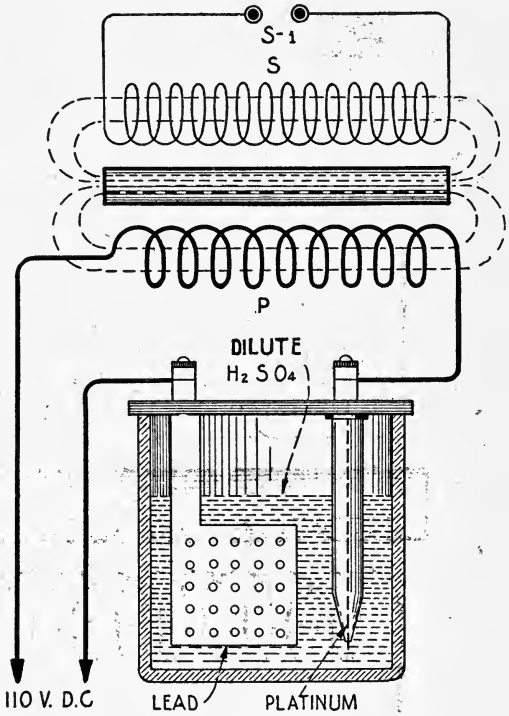

Fig. 59—Electrolytic Interrupter Connected to an Induction Coil.

Now the voltage of this circuit may be measured by the voltmeter V which is an instrument of high resistance, taking a very small amount of current, and the current can be measured by the ammeter A which conversely is an instrument of low resistance. In the problem cited, ammeter A should indicate current of 4 amperes, and meter V pressure of 110 volts. The power in watts $= 4 \times 110 = 440$ watts $= 0.44$ K. W.

(*a*) *Fuses.* Fuses are required at points F, F, to protect the generator connected to terminals A, B, from accidental short circuit or overload. These consist of lead or composition alloy wire which melts when more than a predetermined number of amperes pass through them. In order to protect the circuit of Fig. 60, the fuses should have current

carrying capacity of 5 or 6 amperes. Then if current in excess of this value is drawn, the alloy wire melts, completely cutting off the current.

In the power circuits of the Marconi wireless system, enclosed fuses are employed exclusively. These consist of a strip of fusible material of the requisite current capacity, stretched between two brass lugs and enclosed within a fiber cylinder.

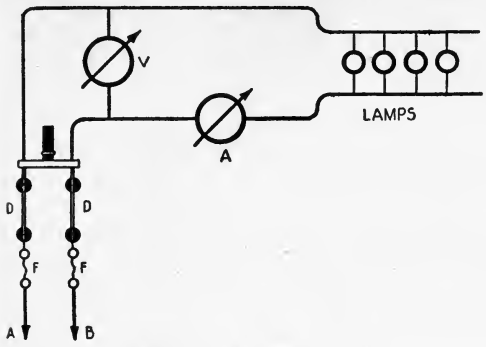

Fig. 60—Simple Power Circuit.

A second example of a practical circuit is shown in Fig. 61 where the terminals connect to a 550 volt direct current generator. Assume that only 110-volt incandescent lamps were available for lighting purposes; then to prevent the lamps being burned out by excessive voltage they are connected in series. The complete circuit will pass ½ ampere of current at a pressure of 550 volts. A voltmeter connected around any of the lamps would indicate approximately 110 volts. Should any of the lamps burn out, the circuit will be broken and can only be established when a new lamp is substituted for the burnt one. Since the potential across the entire bank of lamps is 550 volts, and the current ½ ampere, the bank of lamps would require ½ × 550 = 275 watts or a little more than ¼ K. W.

A third example of a practical circuit is shown in Fig. 62 wherein alternating current is transmitted, let us say, from a central power station at 2200 volts pressure, passed through the primary winding of the transformer P which is of relatively high resistance. By electromagnetic induction, a current is induced in the secondary winding at a pressure of 110 volts with a corresponding increase of current as compared with that flowing in the primary winding. This current may be employed conveniently for lighting a bank of lamps such as indicated at L.

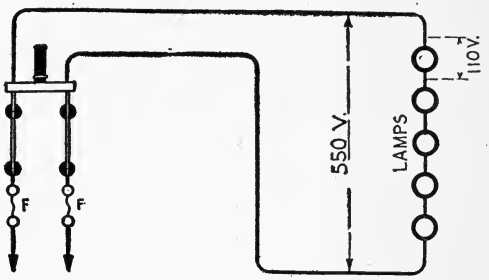

Fig. 61.—Lamps in Series on 550 Volts Circuit.

Assume the bank of lamps in this drawing to consist of 8 lamps connected in parallel; they will require 4 amperes of current and the fuses at F-1 should have capacity of 5 or 6 amperes. On the other hand, the strength of the current in the primary winding P is relatively low and much smaller fuses will be employed to protect this circuit.

When electrical energy is transferred from the primary winding to the secondary winding, certain losses due to resistance, heating of the core and magnetic leakage take place, hence, the total power flowing through P exceeds that taken from S. If winding S

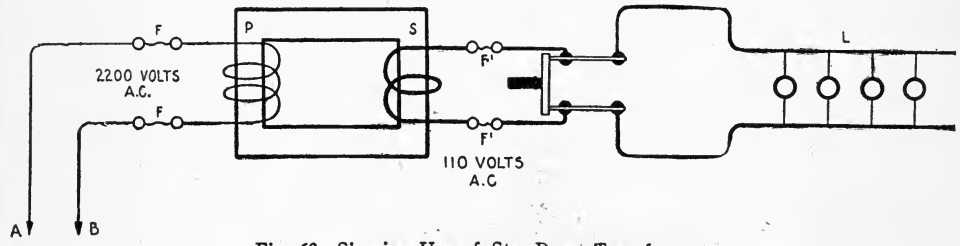

Fig. 62—Showing Use of Step-Down Transformer.

and the circuits associated therewith take 440 watts we may assume a value of 500 watts for the circuit P. Since the number of watts in a given circuit = I × E, then (assuming no phase displacement) $I = \frac{W}{E}$ or for winding P, $I = \frac{500}{2200} = 0.22$ amperes, the approximate value of the current flowing through winding P. A one ampere fuse would therefore protect the primary circuit from overload.

The installation of all types of a power or radio equipment are made in accordance with certain definite rules or regulations which have been adopted by the National Association of Electrical Inspectors. These rules vary slightly in different cities of the United States, but are generally in accordance with the national code. The installation of power or wireless apparatus should not be undertaken until these rules have been carefully gone over. The foregoing explanations and examples explain but partially the problems of ordinary electric circuits, but they serve to show certain fundamental facts which should be of some value to the elementary student of radio-telegraphy.

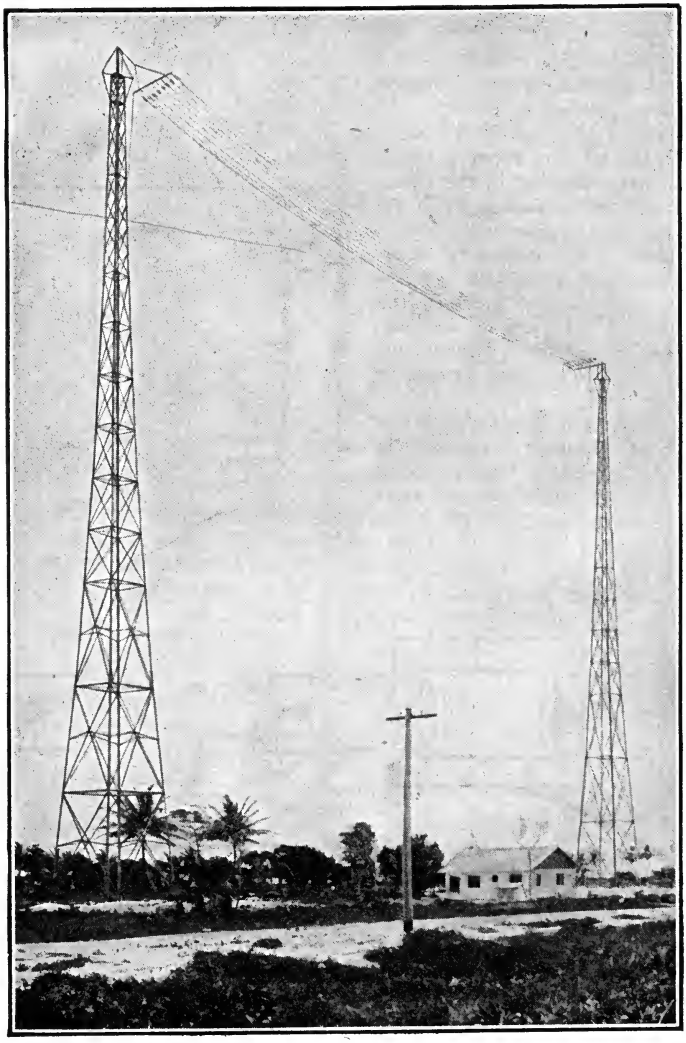

Fig. 62a.—A High Power Radio Station in the Tropics.

PART IV.

MOTOR GENERATORS.

HAND AND AUTOMATIC MOTOR STARTERS.

52. The Motor Generator. **53.** Field Rheostats. **54.** Dynamotor and Rotary Converter. **55.** The Motor Starter. **56.** Automatic Motor Starters. **57.** Protective Condensers. **58.** Care of the Motor Generator. **59.** How to Remove Motor Generator Armature.

52. The Motor Generator.—The required high voltage current for the operation of a radio-transmitter is obtained from (1) *a source of alternating current,* (2) *an alternating current step-up transformer;* but practically all vessels that have been fitted with radio sets to date have a direct current dynamo making it necessary to install a motor generator to obtain an A. C. source of supply.

A *motor generator* is simply *a motor* and *a dynamo* coupled together on a common cast iron base, the motor being set into rotation by direct current, the dynamo in turn generating an alternating current of the required voltage and frequency. Such machines may have two or four bearings, two for the motor armature and two for the generator armature or the shaft may be strengthened at the center and have both armatures mounted on it. In this case the shaft has two bearings.

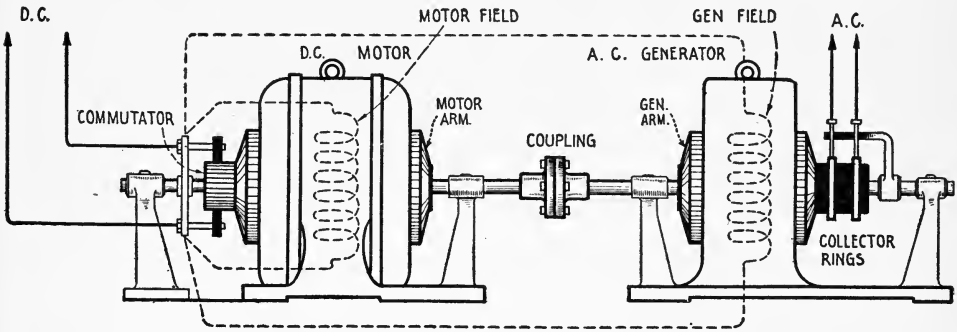

Fig. 63—General Construction of Motor Generator.

A general outline of the construction of a motor generator is shown in Fig. 63 where a direct current motor is mounted on the left of the cast iron base, the alternating current generator on the right. The motor receives direct current at pressure of 110 volts (generally) and the dynamo generates alternating current at frequencies from 60 to 500 cycles and at voltages varying from 110 to 500 volts according to the design. The student should note from Fig. 63 that (1) the generator field windings receive current from the same source as the motor, e. g., in the case of a ship installation, from the ship's dynamo; (2) both the motor and generator field windings are connected across the D. C. power line.

For the operation of radio-transmitters, a motor generator is required that will give:

(1) Constant speed under variable load;
(2) Constant alternating current voltage under variable load.

For the quenched spark transmitter, a constant current generator having a falling voltage characteristic under a load is preferred.

When a motor generator is connected to a wireless transmitter, it is subjected to an intermittent load following the closing of the transmitting key, and there-

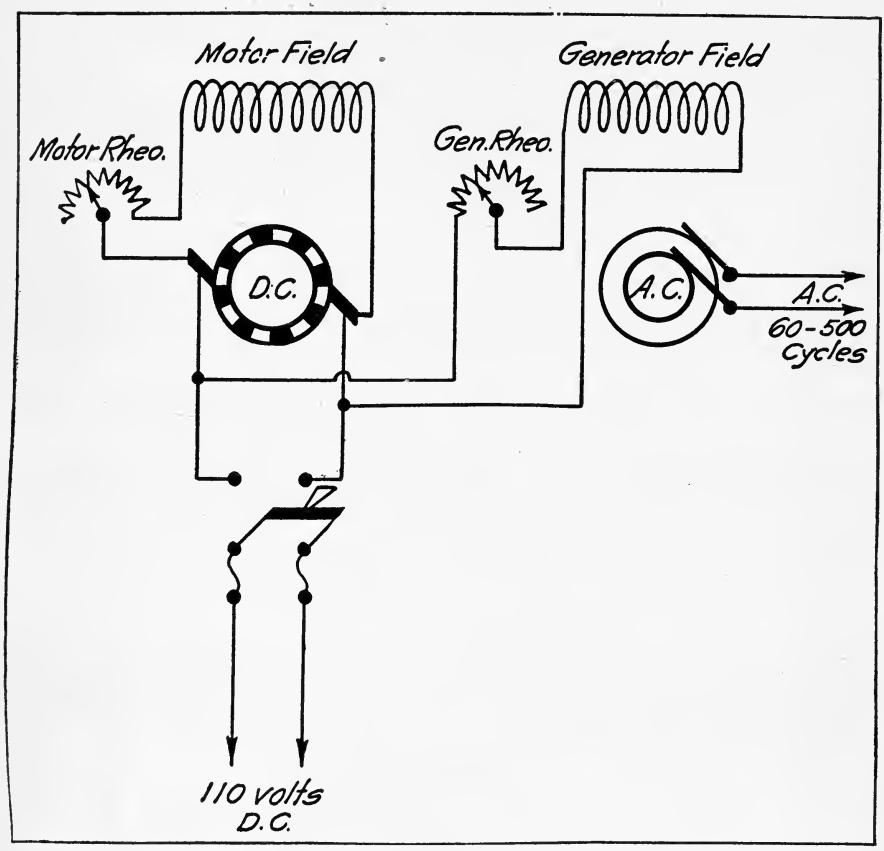

Fig. 64—Simple Shunt Wound Motor Generator.

fore, some means must be provided whereby either a uniform alternating current frequency or voltage for both can be maintained. In practice the necessary regulation is obtained by special motor field and generator field windings. Hence, motor generators may be classified with respect to their windings.

Three different types are in commercial use:

(1) A shunt wound motor coupled to a simple alternating current generator:
(2) A shunt wound motor coupled to an alternating current generator, having a compound wound field:
(3) A motor with differentially compounded fields coupled to a simple alternating current generator.

An example of type (1) is the 2 K. W. 500 cycle Crocker Wheeler motor generator used with the Marconi panel transmitters; of type (2) the 1 K. W. 60

cycle Robbins & Meyers motor generator; of type (3) the 2 K. W. 240 cycle motor generator. All three types are in use in the radio sets of the American Marconi Company.

The fundamental circuit of type (1) is shown in Fig. 64; of type (2) in Fig. 65 and of type (3) in Fig. 66. The student should take careful note of the position of the generator and motor rheostats in all three diagrams because in addition to

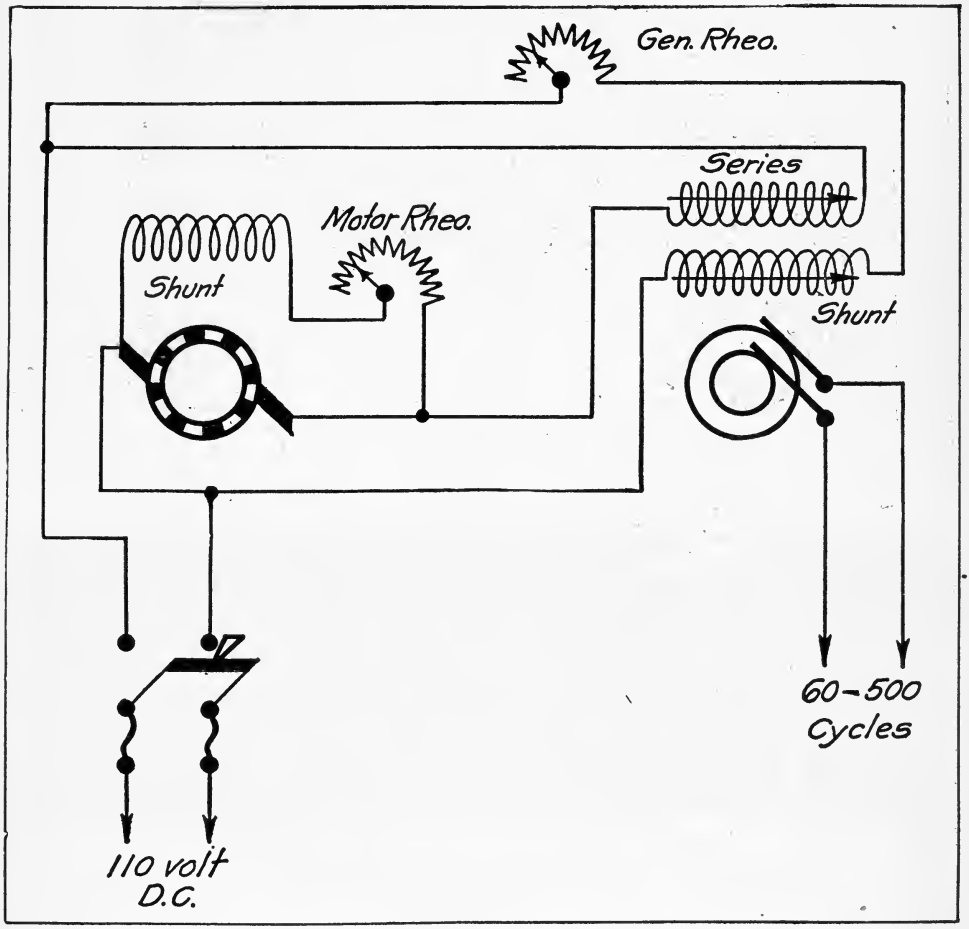

Fig. 65—Motor Generator with Compound Generator Field Winding.

the automatic regulation which these machines are designed to give, initial adjustments of either voltage or frequency can be made by the rheostats. *For example, if resistance be added at the motor field rheostat, the motor speeds up and, therefore, increases the frequency of the generator. If resistance be added at the generator rheostat, the generator field current reduces and the voltage across the armature terminals drops. If more current is admitted to the field coils, the voltage of the armature increases.*

Explanations given in Part III will cover the shunt wound motor generator of Fig. 64. By proper design, fair regulation of frequency and voltage is secured with this type under the conditions imposed by a wireless transmitter.

It will be noted from the diagram of Fig. 65, the generator has two field windings, a *series winding* connected in series with the motor armature and a *shunt winding* connected directly across the D. C. line. The windings are disposed on each field pole of the generator so that the lines of force generated by the series winding and those of the shunt winding *flow in the same general direction.* When a motor generator of this type is subjected to load, there will be a tendency towards a decrease in speed, but there will then be an increase of current through the series winding (because it is connected in series with the

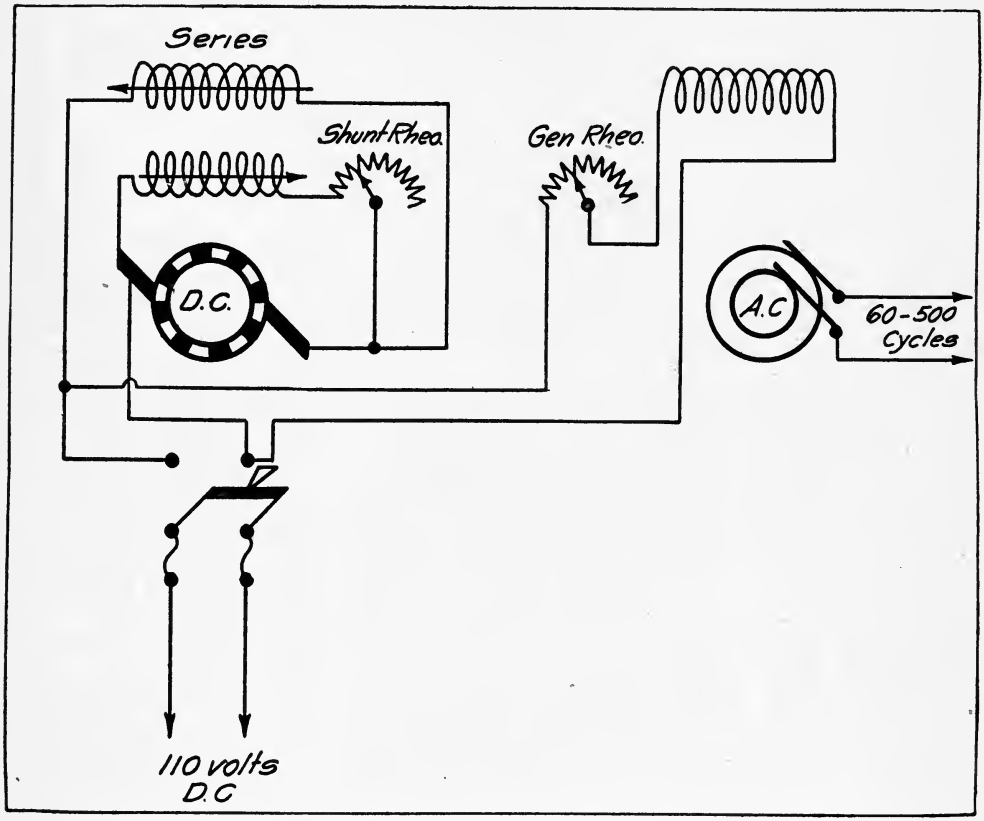

Fig. 66—Circuits of Motor Generator with Differential Motor Field Winding.

armature) which has the effect of increasing the strength of the generator field, thereby maintaining the voltage of the alternator fairly constant under variable load. The motor of this machine has a simple shunt winding with a speed regulating rheostat, connected in series. The voltage of the generator may be increased or decreased by means of the generator field rheostat.

The differential motor of Fig. 66 has been explained in Paragraph 40. The principal advantage of the motor generator in Fig. 66 is that it maintains a uniform speed under variable load which results in a uniform frequency of current at the terminals of the alternator.

A photograph of the 2 K. W. 500 cycle Crocker Wheeler motor generator appears in Fig. 67a wherein the motor generator armatures are clearly shown. The

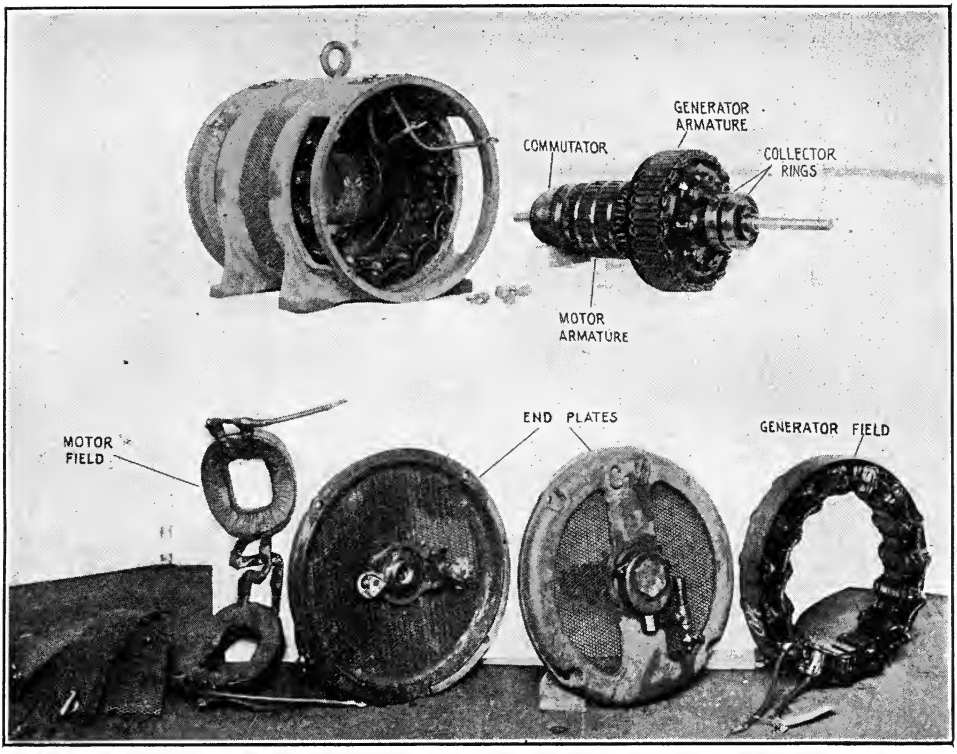

Fig. 67a—Details of Crocker Wheeler 2 K. W. 500 Cycle Motor Generator.

generator has 30 field poles and the motor 2 field poles. The armature revolves at 2,000 R. P. M., hence there are 33 1-3 revolutions per second which multiplied by 30 (the number of field poles) gives 1,000 alternations of current per second. And since two *alternations of current constitute a cycle,* the frequency of this generator is 500 cycles per second. The motor of this machine takes 29 amperes at pressure of 110 volts D. C., but the generator armature delivers alternating

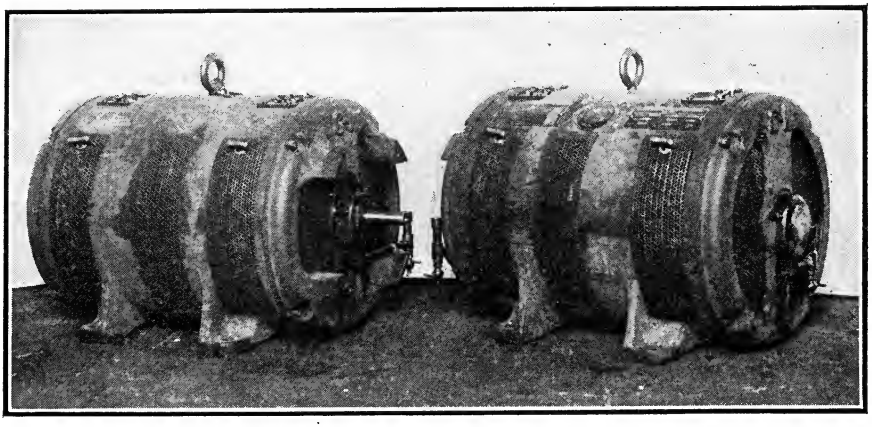

Fig. 67b—2 K. W. Crocker-Wheeler Motor Generator Assembled.

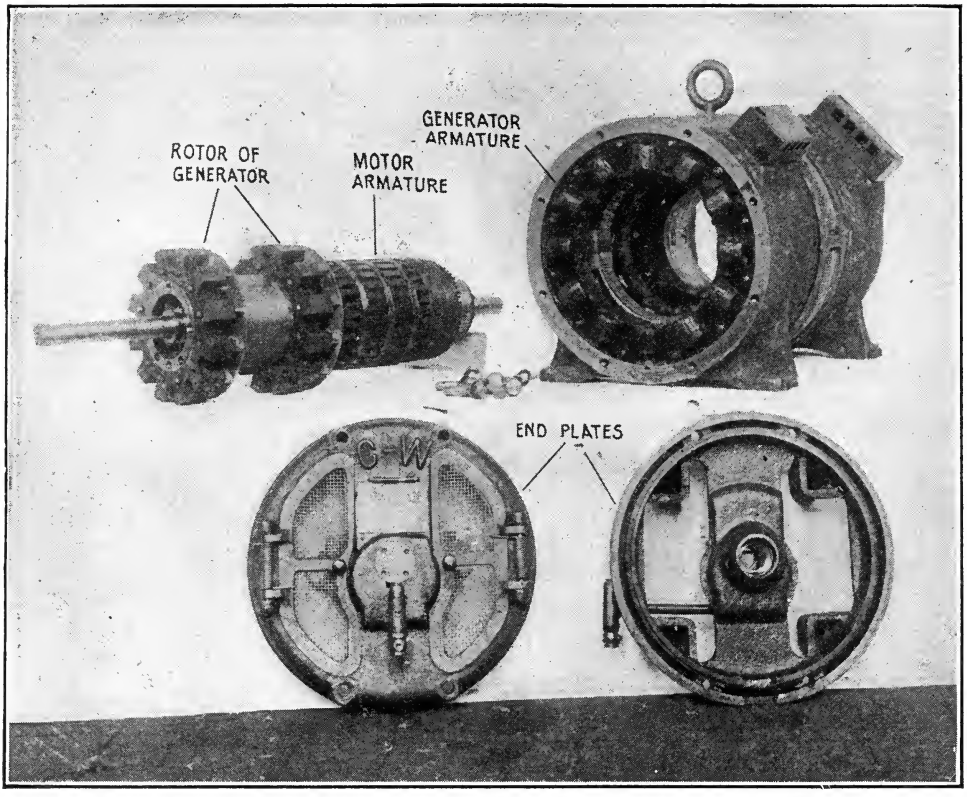

Fig. 67c—Details of ½ K. W. 500 Cycle Crocker Wheeler Motor Generator.

current at pressures varying between 120 and 380 volts with current output of 20.8 amperes. At normal saturation the generator and the motor fields require about 2½ amperes each. The complete motor, therefore, is rated at $\frac{29 \times 110}{746} = 4.2$ horsepower.

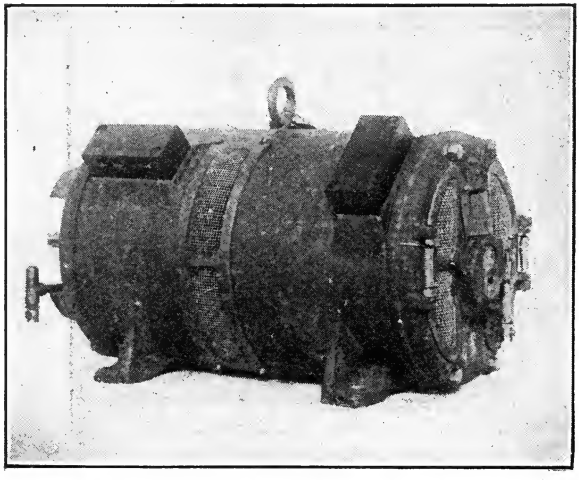

Fig. 67d—½ K. W. Motor Generator Assembled.

Fig. 67a shows the generator and motor field windings, the end plates and the oil gauge of the 2 K.W.500 cycle motor generator. The machine completely assembled but with the rotary disc discharger removed is shown in Fig. 67b.

Details of the ½ K. W. 500 cycle Crocker Wheeler motor generator are shown in Fig. 67c and the assembled machine in Fig. 67d. It is to be noted that the rotor of the generator is composed of two toothed discs without windings and

that both the field and armature windings are stationary. The rotor closes and opens the magnetic circuit between the armature and field windings and thereby induces current in the armature.

53. Field Rheostats.—A type of field rheostat supplied with motor generators is shown in Fig. 68. A coil of composition resistance wire baked in a heatproof insulating cement is mounted in a metal case. The wire is tapped at intervals and connected to brass studs over which a sliding contact arm moves. Another type used by the Marconi Company has a number of turns of bare resistance wire wound on a slate base. A sliding contact moving over the turns permits very close regulation of the flow of current in the field winding. A rheostat of this type is essential for motor generators used with quenched spark transmitters which require extremely close regulation of the generator voltage.

Fig. 68—Cutler Hammer Type Field Rheostat.

54. Dynamotor and Rotary Converter.—The *dynamotor* and the *rotary converter* are employed occasionally to generate alternating current from a D. C. source of supply. The distinguishing feature of these machines is the use of a single armature for both A. C. and D. C., hence, but two bearings are required and the construction of the machine as a whole is simplified. These machines also require less space to erect, but they possess the marked disadvantage of not allowing full control over the voltage. Also they are not as efficient as the motor generator when connected to a radio transmitter.

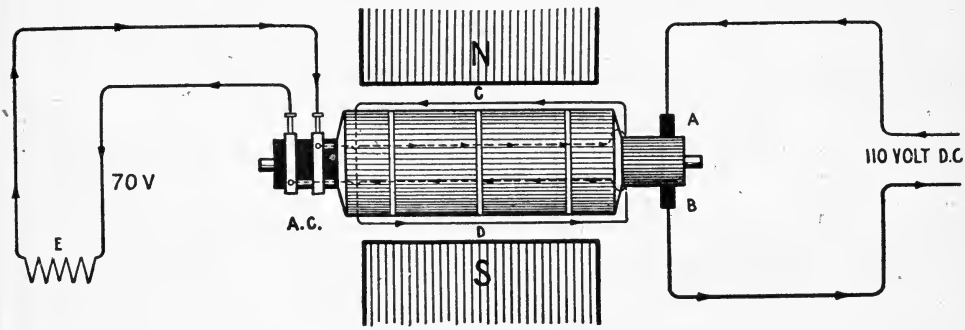

Fig. 69—Fundamental Circuit of Rotary Converter.

The rotary converter shown in Fig. 69 has a single winding on one armature for both alternating and direct current, but the dynamotor of Fig. 70 has *two distinct windings* (on the same armature) one to rotate it as a motor and the other for the production of alternating current.

Explanation of the circuits of the rotary converter of Fig. 69 follows: Direct current from an external source enters the armature coil C, D through brushes A, B, and also flows to the shunt field windings (wiring not shown) causing the armature to revolve in the usual way. Taps taken from this winding at the commutator segments directly under-

neath the brushes are connected to the collector rings on the opposite ends of the shaft, the circuit continuing through the A. C. external circuit E. The voltage of the alternating current will be maximum when the taps to the collector rings are underneath the brushes and minimum when midway between the brushes. It is easily seen that as C, D revolves and attains the position opposite to that in Fig. 69, the current taken from the collector

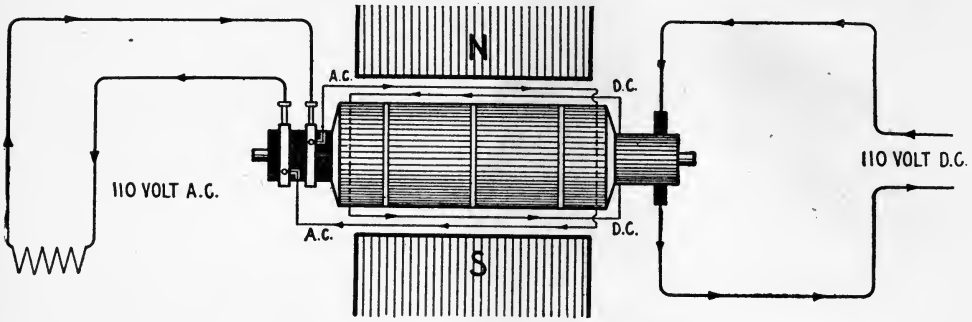

Fig. 70—Fundamental Circuit of Dynamotor.

rings will flow in the opposite direction and therefore as the armature revolves an alternating current can be taken from the armature, the frequency of which varies with the speed. An important point in connection with this machine is that if the D. C. supply is 110 volts, the effective A. C. E. M. F. cannot exceed 77 volts. If 110 volts is desired a small step-up transformer must be used.

The A. C. voltage of the converter may be increased by increasing the speed of the motor, but the frequency of the current increases simultaneously. The converter does not permit the nicety of control of the voltage and the frequency as does the motor generator and, therefore, it operates at a disadvantage.

The circuit of the *dynamotor* is shown in Fig. 70. Here the armature coils for the production of alternating current have no connection with the coils for direct current. The two windings are mounted on the same core but in separate slots. The A. C. winding can be given the correct number of turns so that 110 volts A. C. may be obtained when the armature is connected to 110 volts D. C.

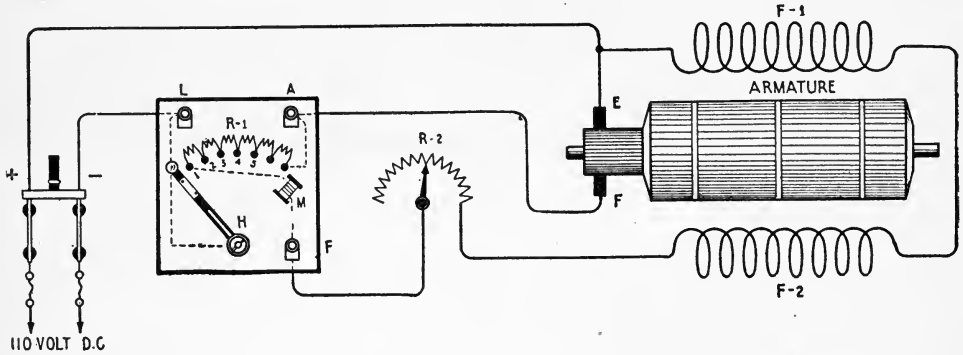

Fig. 71—Cutler Hammer Starting Box Connected to a Simple Shunt Wound Motor.

A small number of either of the foregoing types of machines are used by the Marconi Wireless Telegraph Company of America. The rotary converter is very popular abroad.

55. The Motor Starter.—It has been mentioned in Paragraph 40 that the counter E. M. F. of a motor armature is very low upon starting, and if the terminals of a motor were connected directly to the source of current, an excessive current would flow which might injure the commutator or burn out the armature windings (unless the circuit is properly fused). A motor starter is, therefore, required to reduce the starting current to a safe value.

A diagram of the Cutler Hammer hand starter is shown in Fig. 71. The principal

elements of the starter are the resistance coils R-1, the small holding magnet M and the handle H. The coils of R-1 are of German silver wire or composition wire tapped at certain intervals and connected to the studs 1, 2, 3, 4, 5. The circuit from the negative side of the D. C. power line may be traced to the L post of the starter through the handle H which when placed on the first point of contact permits the current to flow through the coils of R-1 to the terminal A, thence to the brush F of the motor armature. The circuit continues through the armature coils back to brush E and to the positive side of the line. One terminal of the field windings F-1 and F-2 receives current at the positive side of the line at brush E, but the other terminal has the field rheostat R-2 connected in series, also the holding magnet M; also this circuit continues to the first tap on the resistance coils R-1. Now as the handle is moved slowly across the contact studs on the starter current is admitted to the motor armature by small increments which sets it into rotation, the speed gradually increasing as the handle moves toward the final or full running position. When this position is attained, the magnet M grips the handle and holds it in position until it is released by opening the main D. C. line switch. The diagram shows the Cutler-Hammer starter connected to a shunt wound motor.

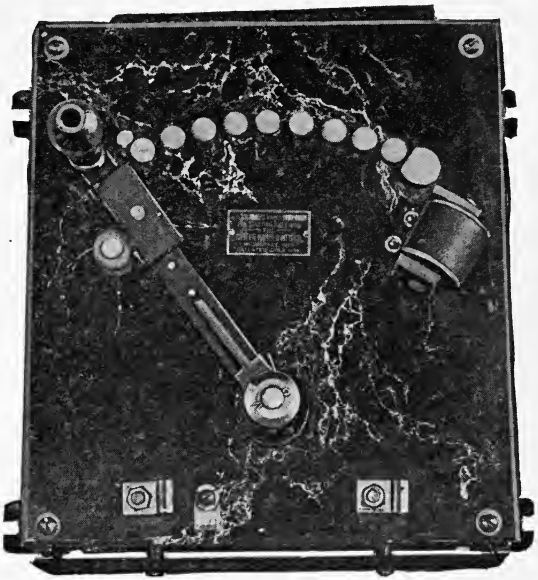

Fig. 71a—Cutler-Hammer Hand Motor Starter.

It is important that a motor be started neither too rapidly nor too slowly. If the former condition obtains the fuses in series with the line to the motor armature will melt, but if the starting handle is moved too slowly across the contact studs, the internal resistance coils will overheat and perhaps burn out. The speed of acceleration of the starting handle can usually be gauged by observing the speed of the motor armature. It should require no more than 15 seconds to start the motors used in connection with wireless telegraph apparatus.

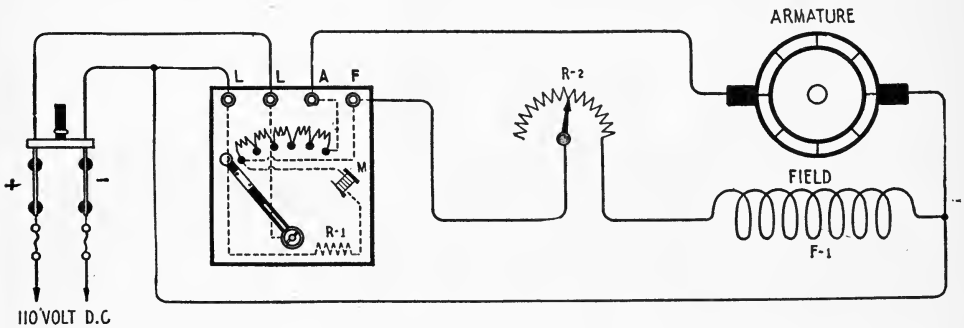

Fig. 72—General Electric Company's Hand Starter Connected to Shunt Wound Motor.

The release magnet M, Fig. 71, serves to protect the motor in case the main line circuit is disconnected or should by accident the circuit to the motor field windings be broken. In either event the handle H flies back to the starting position by the tension of a spring attached to the bearing of the handle, and thus interrupts the circuit to the armature.

The General Electric Company's hand starter differs slightly from the type just described. A complete diagram is shown in Fig. 72 where the starter is connected to a simple shunt wound motor. It is to be noted in this diagram that the release magnet M is shunted across the D. C. line, and has a coil of fixed resistance R-1 connected in series. In all other respects, the wiring is the same as the first type and the starter performs the same

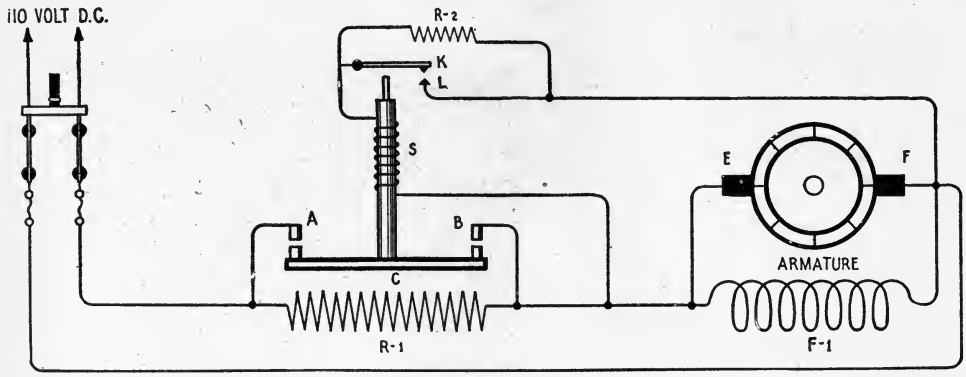

Fig. 73—Circuit of Automatic Starter for Marconi ½ K. W. 120 Cycle Set.

functions. If the source of power is cut off, magnet M releases the handle of the starter whereupon it returns to the zero position, breaking the circuit to the armature.

56. Automatic Motor Starters.—It is often essential to install a motor generator at a point remote from the wireless cabin in order that the noise from its operation may not interfere with the reception of wireless signals. In instances of this kind automatic motor starters are employed, which are controlled from a distant point by pressing a small button or closing a small switch. *Such starters possess the advantage that the acceleration of the starting handle is uniform, and there is, therefore, no danger of burning out the armature or melting the fuses during the starting of a motor.*

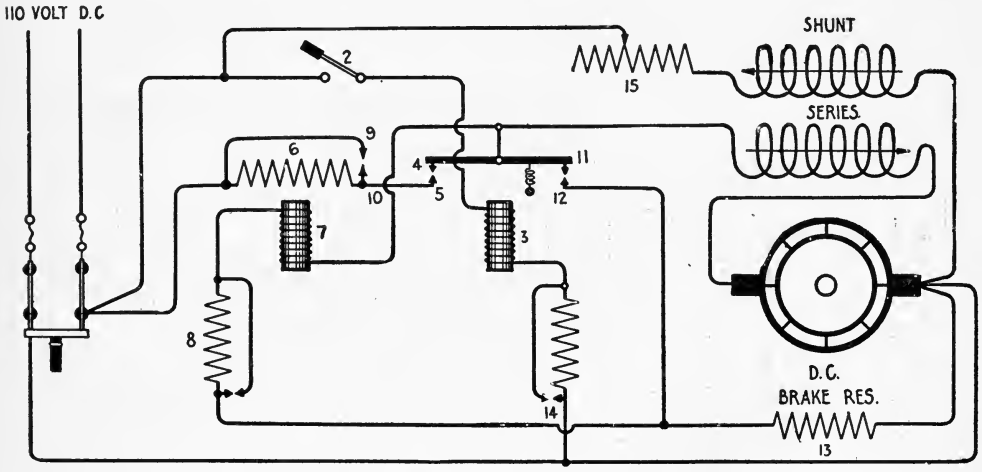

Fig. 74.—Circuits of Automatic Motor Starter for Marconi ½ K. W. 500 Cycle Set. (See Fig. 255).

There are numerous types of automatic starters on the electrical market but only those used in modern Marconi sets can be given consideration here.

The complete circuit of the *single step automatic starter* is shown in the diagram of Fig. 73. It is employed in connection with the ½ K. W. 120 cycle Panel transmitters of the Marconi Company. A single resistance unit R-1 is connected in series with the brushes

E and F of the armature. The solenoid winding S connected in shunt to the motor armature draws up the plunger C which in turn shunts the coil R-1 through the contacts A and B. When the main D. C. line switch is closed, current flows to the motor armature through R-1 and as the counter E. M. F. of the armature increases, the solenoid winding becomes more strongly magnetized, drawing up the plunger, which cuts out the resistance coil. Now when the plunger of the solenoid is in the full running position, contacts K and L are forcibly opened and the resistance unit R-2 is connected in series with the solenoid winding. This is to prevent the magnet winding from overheating and consequent injury.

The circuits of the automatic starter employed in the ½ K. W. 500 cycle transmitting sets of the Marconi Company are shown in Fig. 74. When the starting switch 2 is closed, the solenoid 3 is connected in shunt to the D. C. line. The flux from this solenoid attracts the lever 4 making contact with points 5, thereby closing circuit from the D. C. line to the motor armature through the resistance coil 6. Simultaneously the solenoid 7 is connected in shunt to the D. C. line (through the lever 4) which attracts the lever 9 making contact with point 10, thus cutting the resistance 6 out of the armature circuit, whereupon the motor is connected directly to the main D. C. line. It is apparent that the lever of solenoid 3 opens and closes the main power circuit while the lever of solenoid 7 cuts out the resistance in series with the motor armature. The solenoids 3 and 7 have the resistance coils 14 and 8 respectively, which are connected in series with their respective windings automatically by the levers 4 and 9. These resistances prevent the solenoid winding from overheating.

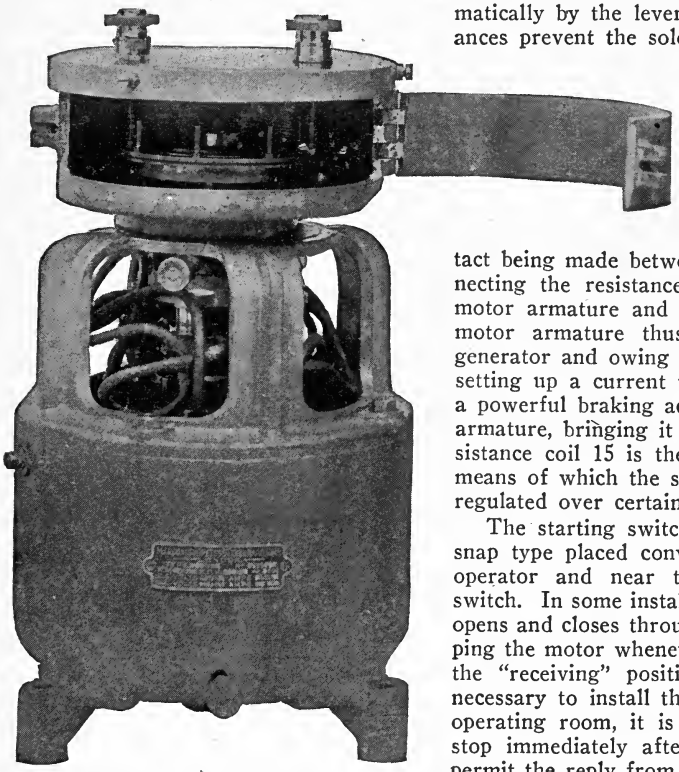

Fig. 75—English Marconi Company's one-half Kilowatt Vertical Type Converter with Synchronous Disc Discharger on Shaft.

The automatic starter also includes the elements of an electrodynamic brake. When the starting switch 2 is open, lever 4 drops back, also lever 9, followed by contact being made between points 11 and 12 connecting the resistance coil 13 in shunt to the motor armature and the series winding. The motor armature thus temporarily becomes a generator and owing to the power expended in setting up a current through the resistance 13, a powerful braking action is set up against the armature, bringing it to a quick stop. The resistance coil 15 is the motor field rheostat, by means of which the speed of the motor can be regulated over certain limits.

The starting switch 2 is usually one of the snap type placed conveniently for the wireless operator and near to the aerial changeover switch. In some installations the starting circuit opens and closes through the latter switch, stopping the motor whenever the aerial switch is in the "receiving" position. In case it becomes necessary to install the motor generator in the operating room, it is essential that the motor stop immediately after the sending period, to permit the reply from a distant radio station to be deciphered without interference.

The circuits of the *automatic starter supplied with the 2 K. W. 500 cycle transmitting sets of the Marconi Company are* shown in Fig. 75a. In addition to acting as a motor starter it performs the functions of a main line circuit breaker through the medium of an overload relay switch. The starter has three resistance units connected in series with the motor armature instead of the single resistance unit described in the two previous types.

It will be observed from the drawing that the field winding of the motor is connected in shunt with the D. C. line through the regulating field rheostat 23. *As resistance is increased* at 23, *the speed of the motor increases,* and consequently, *the frequency of the alternator.*

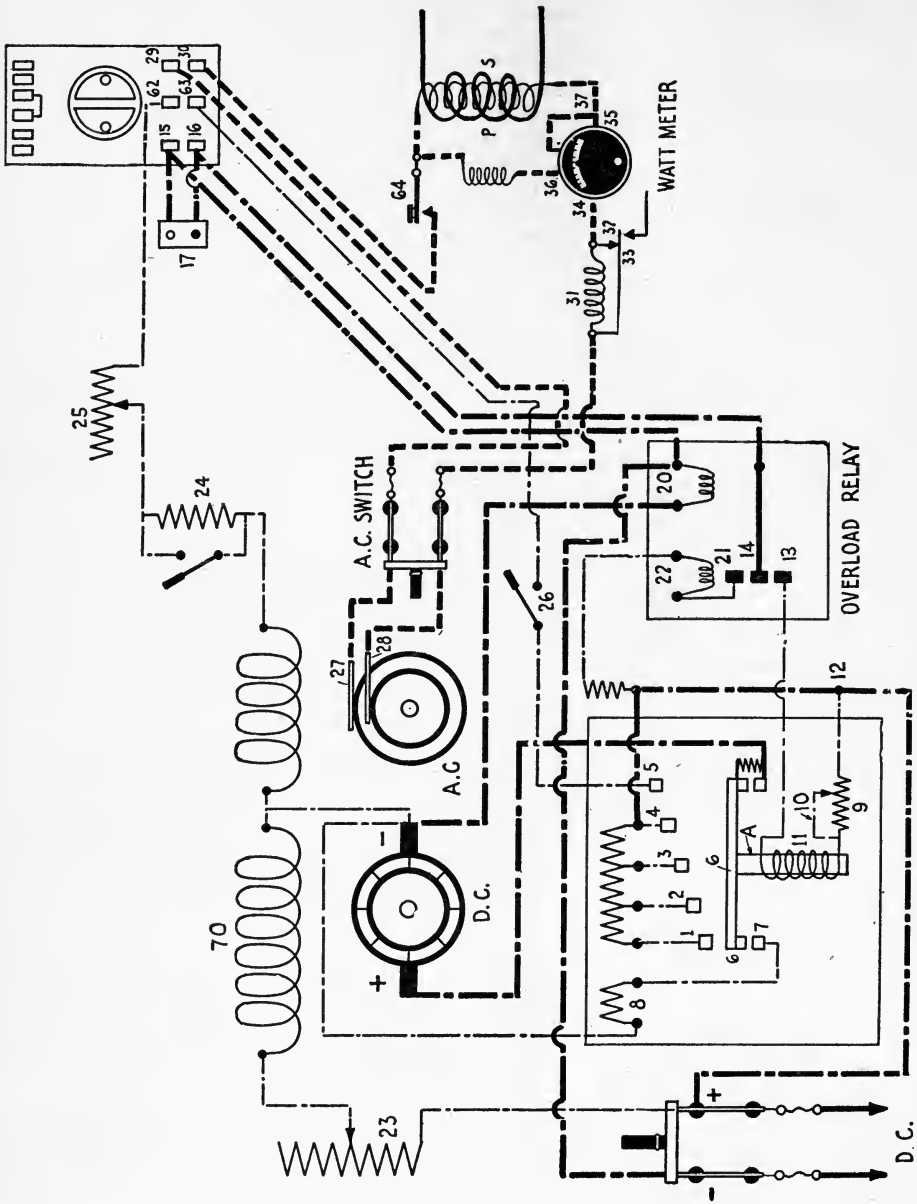

Fig. 75a—Complete Circuit Diagram of Automatic Starter and Motor Generator of the Marconi 2 K. W. 500 Cycle Set.

The generator field winding is connected in shunt to the D. C. line through the low power resistance 24 and the voltage regulating rheostat 25. The field circuit continues to the contacts of the antenna switch 62 and 63 through the control switch 26 and finally to contact 5 of the automatic starter. By this connecion the circuit to the generator field winding remains open until the bar 6 attached to the plunger A of the automatic starter has touched point 5. When the bar of the automatic starter makes contact with point 4, the D. C. armature is connected directly to the main D. C. line.

By increase of resistance at the rheostat 25, the voltage of the A. C. generator drops but it may be increased correspondingly by the reduction of resistance. Low values of voltage may be secured at the terminals of the alternator by an external fixed resistance 24 connected in series with the generator rheostat. This is shunted by the switch indicated in the drawing.

The *overload relay* employed in conjunction with the automatic starter has the magnet winding 20, which may be called the *tripping magnet,* and the second magnet winding 22, which may be called the *holding magnet.* Winding 20 is in series with the D. C. armature on the negative side of the line. If more than a predetermined number of amperes flow through this winding, the lever 14 is drawn up, breaking the circuit of the solenoid winding 11 through the contacts 13 and 14. Immediately afterward the circuit through winding 22 is closed through contacts 14 and 21. This causes the lever 14 to be held in that position until either the main D. C. line switch or the starting switch 17 is opened.

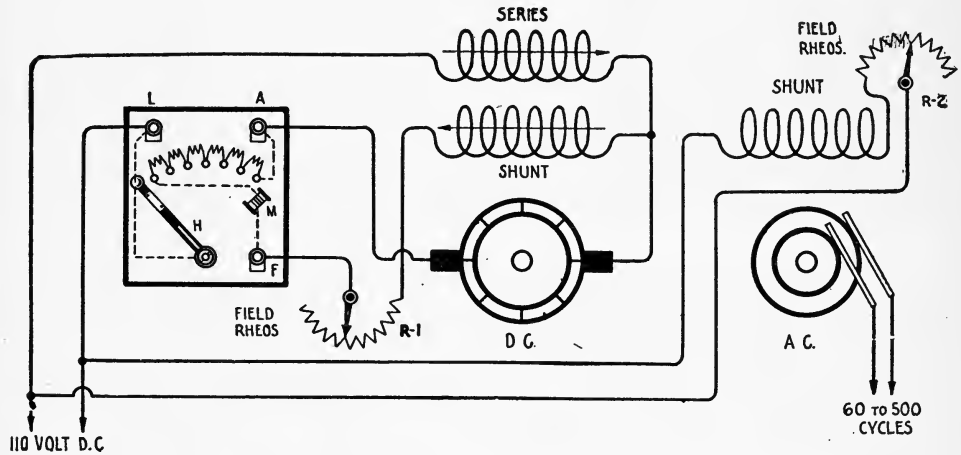

Fig. 76—Hand Starter Connected to Motor Generator with Differential Motor Winding.

One terminal of the solenoid winding 11 is connected to the positive pole of the D. C. line at point 12. The circuit continues through the fixed resistance 9, shunted by the switch 10, through the contacts 13 and 14 of the overload relay, through contacts 15 and 16 of the antenna switch, to a terminal of the winding 20. which is of negative polarity. Hence it is readily observed that the solenoid winding is connected in shunt to the D. C. line when either contacts 15 or 16 or the starting switch 17 is closed.

The switch 10 in shunt to the resistance 9 is automatically opened by the plunger A of the automatic starter when it is in the full vertical or running position.

The resistance coils of the motor starter, connected in series with the D. C. line to the armature, are progressively cut out of the circuit at contacts 1, 2, 3 and 4 by the bar 6. When the circuit to the solenoid 11 is closed, the plunger A with the bar 6 moves in a vertical position, the acceleration being regulated by a piston drawn through a vacuum chamber. When contact is made between the bar 6 and point 1, the circuit to the armature includes the entire set of resistance coils.

When the circuit to the winding 11 is interrupted, either at point 17 or at the serial switch contacts 15 and 16, the plunger A drops downward and through the medium of contacts 6 and 7, the resistance coil 8 is connected in shunt with the D. C. armature. At this stage of operations the momentum of the armature causes it to become temporarily a D. C. generator and current of large value flows for a few moments through the resistance 8. The magnetic field thus set up by the armature causes a powerful dragging action on the field

poles bringing the armature to a quick stop. Reviewing the foregoing: When the handle of the type SH aerial changeover switch (or any other type) is thrown to a transmitting position, the motor generator is automatically started, provided the main D. C. line switch is closed. It will be brought to a quick stop when the antenna switch is placed in the receiving position, provided the switch 17 remains open. If the switch 17 is closed, the motor generator can be kept in a continuous state of operation during the receiving period.

The speed of acceleration of the starter arm can be very closely regulated by means of an adjusting screw attached to the bottom of the vacuum chamber. It usually requires 12 seconds to bring the starter up to the full running position.

When it becomes necessary to make repairs or adjustments to the generator or the A. C. power circuits, the generator field switch 26 should be open. *When the motor generator is to remain idle for an indefinite period, the main D. C. line switch should be opened to break the circuit to the field winding of the motor.*

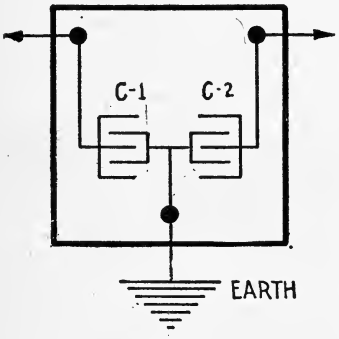

Fig. 77—Protective Condensers.

In the diagram of Fig. 76 the complete circuit of a *differentially wound motor* coupled to a *simple alternating current generator* is shown, including the connection of the field rheostats and the hand starter. The student should give this diagram careful consideration as it serves to show the complete fundamental circuit of various types of motor generators in the Marconi service. This diagram should be used in answer to the Government examination query regarding the fundamental circuits of the motor generator.

57. Protective Condensers. When a wireless telegraph transmitter is in operation, a powerful electrostatic field is set up in the region about the aerial wires. *If the power apparatus is installed in such a manner that the low voltage wires leading to the motor generator or other apparatus, lie parallel or in proximity to the antenna wires, currents of very high potential will be induced in the power wires which may puncture the insulation.* A path is then afforded for the low voltage current which may cause an arc, completely short-circuiting the windings of a motor generator. In other words, this induction sets up a difference of potential between the various windings or between the windings and the frame of a motor generator which may result in a disastrous burnout. The low voltage wires can be well protected by installing them in iron conduit, the latter in turn, being thoroughly connected to the earth. The induced currents will flow on the surface of the pipe and be neutralized by the earth connection, and thus do no harm to the power wiring. The power wires of commercial radio installations are either installed in iron conduit or in lead-covered cables, but in addition to this protection, *protective devices* known as *protective condensers* or *protective resistances* are employed.

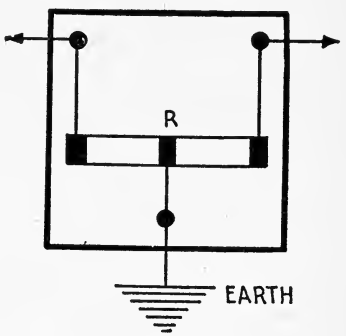

Fig. 78—Protective Resistance Rod.

Protective condenser units consist of two one-half microfarad condensers connected in series mounted on an insulating support as in Fig. 77. The middle connection is extended to the earth and the remaining terminals connected across the field or armature windings of a motor generator or between these windings and the frame. Differences of potential that may be induced in such windings are thereby neutralized and reduced to zero through the earth connection.

Carbon or *graphite rods* of high resistance are often employed for protective purposes as shown in Fig. 78. A single graphite rod having resistance of about 5,000 ohms is mounted on an insulating support and connected to earth at the middle point. The two remaining terminals are connected to the windings of the motor generator to be protected. These rods

have sufficient resistance to prevent appreciable leakage of the low voltage current but possess sufficient conductivity to pass the induced current of high voltage.

Protective rods or protective condensers are connected:

(1) In shunt to the motor armature.
(2) In shunt to the generator armature.
(3) In shunt to the field windings of the motor.
(4) In shunt to the field windings of the generator.

The diagram of Fig. 79 shows how protective condensers are attached to the motor generators in modern Marconi sets. Condensers A, B, C and D are of ½ or 1 microfarad capacity each. One terminal is connected to a binding post and the other terminal to the frame of the motor generator. *The frame of the motor generator is connected to the earth* at the binding post or at any other convenient point. These condensers are generally mounted in a containing rack on the top of the motor generator and protected from injury by a cast iron case.

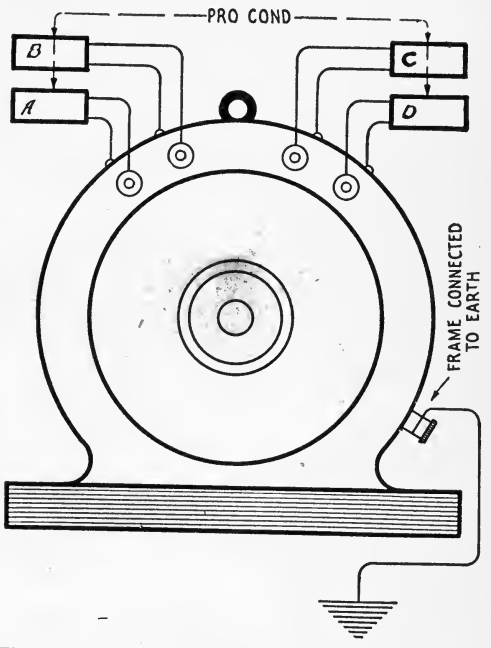

Fig. 79—Showing How Protective Condensers are Connected to Marconi Motor Generators.

In naval radio systems, fuses are connected in series with the protective condensers to protect the power mains in case of puncture of the dielectric.

58. Care of the Motor Generator. —When first coming in contact with a motor generator of any type, the student should note particularly how the brushes are held in the rocker arm and how the connections are attached to and between the various brush holders. He should also note the connections inside the frame from the motor to the generator. Particular observance should be made of the *thrust bearing* mounted on the end of the shaft to take up the *"end play."* In the case of the 2 K. W. 500 cycle motor generator, the method of attaching the rotary spark gap to the end of the generator shaft should be carefully gone over.

Proper care of the motor generator is assured if the following general rules are observed:

(1) Keep motor brushes clean and free from copper dust. Use sand paper only, avoid emery cloth.
(2) Clean commutator occasionally with a fine grade of sand paper.
(3) Oil bearings frequently. Open up petcocks occasionally, to assure that oil container has the necessary supply.
(4) Make sure that all petcock valves are tight so that they will not loosen by vibration.
(5) Wipe off frame of motor generator, brush holders, and rocker arm occasionally to prevent accumulation of carbon dust and grease.
(6) Do not overspeed motor. Normal speed can be observed by the reading of the frequency meter or by applying a speed indicator to the end of the motor generator shaft. Observe either wattmeter or ammeter occasionally to insure that the normal load of the generator is not exceeded.
(7) When removing armature from motor generator, it is generally more convenient to take off the generator end plate.
(8) Be careful not to injure commutator by scraping against the field poles.
(9) See that protective condensers are at all times properly connected.
(10) Punctured condensers should be removed or disconnected from the circuit.

(11) **In the case of the 2 K. W. 500 cycle motor generator, adjust overload relay for 35 amperes.**

(12) **If a single resistance coil in either the hand starter or the automatic starter burns out, close the circuit by placing a jumper around the burned out portion.**

(13) **If field rheostat burns out, close the circuit by a jumper. If burned beyond repair, substitute 3 or 4 16 C. P. lamps, connected in parallel.**

(14) **Tighten up all connections frequently. These should be gone over once per month.**

59. How to Remove Motor Generator Armature.—In case it becomes necessary to remove the armature of the Marconi 2 K. W. 500 cycle motor generator for the purpose of repairs, it is necessary first to remove the casing of the spark gap. Follow this by

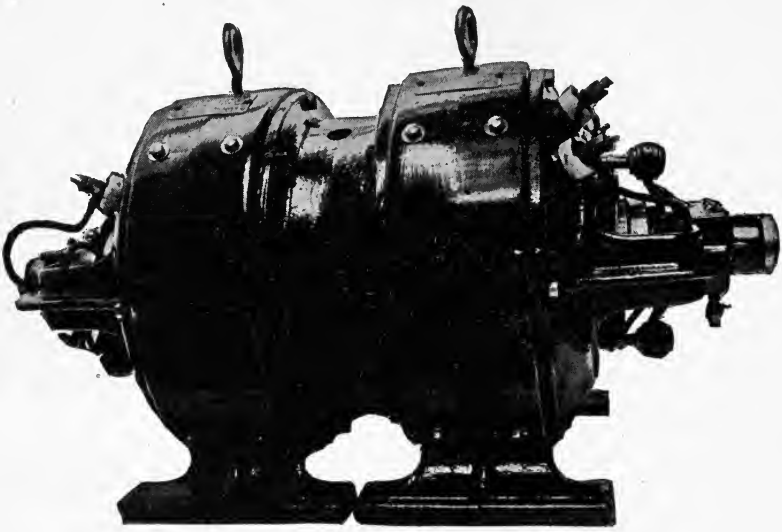

Fig. 79a—1 K. W., 60-cycle Motor-generator (Two Bearing Unit).

taking out the wedge-shaped key in the end of the generator shaft. If the rotary disc is given a slight tap with the hammer, the key will be released and the disc may be removed from the shaft. After this, the bearing bracket can be removed from the generator end. The brushes should then be removed from the commutator and the collector rings. After these operations have been gone through, the armature can be pulled out and a new one inserted, if necessary. When the armature is replaced, the oil rings should be held up to permit the shaft to pass through the bearings. Care should be taken to see that the oil rings are working properly and that the bearings are thoroughly oiled for the initial test. Before starting the motor generator careful inspection should be made to see that all parts are properly secured and in working order.

It should be noted that the mica of the commutator of this machine is undercut about 1-32 inch, and before it gets flush with the commutator bars, the mica should be cut out again.

PART V.

STORAGE BATTERIES AND CHARGING CIRCUITS.

60. The Necessity for a Storage Battery in a Radio Installation. 61. General Construction and Action. 62. The Charging Process. 63. The Fundamental Actions of a Storage Cell. 64. The Electrolyte. 65. The Hydrometer. 66. How the Capacity of a Storage Cell Is Rated. 67. Fundamental Facts Concerning the Storage Cell. 68. How to Charge a Storage Cell. 69. How to Determine the Value of the Charging Resistance. 70. Lamp Bank Resistance. 71. The Use of the Ammeter and the Underload Circuit Breaker. 72. The Ampere Hour Meter. 73. Overcharge. 74. How to Charge a Battery When the Voltage Exceeds That of the Charging Generator. 75. How to Determine the Polarity of the Charging Generator. 76. Determination of the State of Charge and Discharge of a Battery. 77. Keeping the Level of the Electrolyte. 78. Protecting the Cells From Acid Spray. 79. General Instructions for the Portable Chloride Type of Accumulators. 80. General Operating Instructions for the Exide Cell. 81. The Edison Storage Battery. 82. The Charge and Discharge of the Edison Cell.

60. The Necessity for a Storage Battery in a Radio Installation.—The International Radio-Telegraphic regulations require that an auxiliary source of direct or alternating current be available for operation of the motor generator or a low powered emergency transmitter in case of an accident to a vessel at sea which might put out of action the ship's generator.

The United States regulations (Act of August 13, 1912) require that the auxiliary radio transmitter be capable of transmitting to a distance of 100 miles. A small A. C. or D. C. generator operated by a gasoline or oil engine is permissible as a source of current supply under the United States statute, but the general custom is to employ a *battery of storage cells* for direct operation of the motor generator or emergency transmitter.

Two general types of storage cells are used in connection with emergency transmitters—*the lead plate, sulphuric acid cell* such as the *"chloride"* and *"exide"* types manufactured by the Electric Storage Battery Company and the Edison *nickel iron-alkali cell.* Certain fundamental facts concerning the charge and discharge of storage cells and the standard circuits for their use will now be considered, which is to be followed in another chapter (Part X) by a complete description of the charging panels employed in commercial marine radio installations.

61. **General Construction and Action.**—It is not really electricity which is stored up in a storage cell, but the flow of current from a direct current dynamo through the cell from plate to plate *performs a certain amount of chemical work.* Whenever required this stored up chemical energy can be released in the form of an electric current which will pass from plate to plate through an external circuit. The common type of lead cell comprises a set of prepared lead plates immersed in a dilute solution of sulphuric acid, but a certain electrochemical process known as *"charging"* must be gone through in order that the cell may deliver a current of electricity.

There are two general methods by which the lead plates for a storage cell may be prepared:

(1) A paste of litharge or oxide of lead mixed with a dilute solution of sulphuric acid may be applied to perforations in a lead grid, and then by means of a current of electricity and a suitable electrolyte the surface of some of these plates may be coated with peroxide of lead while other plates become simply spongy.

(2) Large lead plates may be immersed in a certain electrolyte and connected to the terminals of a dynamo. By repeated charge and discharge, some of the plates may be coated with peroxide of lead while the others simply become spongy.

Reviewing the development of the storage battery, we find:

(1) That the earlier types of storage cells comprised two lead plates immersed in a dilute solution of sulphuric acid. The terminals of the plates were connected to a direct current dynamo for a period of several weeks. By repeated charges and discharges, the surface of the plates received a coating of so-called "active material."

(2) Later it was determined that the formation of the plates could be hastened by chemical means previous to the charging process and the manufacture of the plates was accordingly cheapened.

(3) In certain types of present day cells, for instance, the exide lead cell, the active material is applied to the plates mechanically, in the form of a paste.

62. The Charging Process.—In general the charging process of a storage cell is as follows:

When two ordinary lead plates or sets of plates are placed in a dilute solution of sulphuric acid of the correct proportion and a direct current of electricity from a dynamo passed from one plate through the solution to the other, the resulting chemical decomposition deposits a coating of peroxide of lead on one plate while the other plate becomes gray and spongy or porous. When one set of plates is fairly well coated with lead peroxide and the other set becomes spongy, the cell is said to be *"charged."* If the terminals of these plates are now joined together by a conductor (the charging generator having been disconnected), a current of electricity will flow from plate to plate.

The plate coated with lead peroxide is known as the *positive* plate of the storage cell and the other, the *negative* plate. When joined together by a copper conductor, current flows in the external circuit from the positive to the negative plate and the resultant chemical change undoes the work of charging, e. g., part of the peroxide of lead of the positive plate and the active material on the negative plate is converted to lead sulphate which covers the surface. When the plates are fairly well coated with sulphate, the cell is said to be *discharged.* In order that current may be drawn from the cell again, the plates must be connected to a source of direct current and the charging process repeated.

The processes involved in the charge and discharge of storage cells may be better understood from the explanation given by the Electric Storage Battery Company in the following paragraph.

63. The Fundamental Actions of a Storage Cell.—When a lead storage cell is put on *discharge,* the current is produced by the acid of the solution going into and combining with the porous part of the plate called *"active material."* In the positive plate, as stated before, the *active material* is *lead peroxide* and in the *negative plate* it is *metallic lead in a spongy form.*

When the sulphuric acid in the solution combines with the lead in the active material, a compound known as *"lead sulphate"* is formed.

As the discharge progresses, the solution becomes weaker by the amount of the acid used in the plate, which incidentally produces the compound of acid and lead called "lead sulphate." This sulphate continues to increase in quantity and bulk, thereby filling the pores of the plate. As the pores of the plate become filled with sulphate, the free circulation of acid in the plate is retarded, and since the acid cannot then get into the plate fast enough to maintain the normal action, the battery becomes less active, as is indicated by a rapid drop in voltage.

During the charging period direct current must pass through the cells in the direction opposite to that of discharge. This current will reverse the action which took place in the cells during discharge. It will be remembered that during discharge the acid of the solution went in and combined with the active material, filling its pores with sulphate and causing the solution to become weaker. Reversing the current through the sulphate in the plate restores the active material to its original condition and returns the acid to the solution. Thus, during charge, the solution gradually becomes stronger as the sulphate in the plate decreases, until no more sulphate remains and all the acid has been returned to the solution, when it will be of the same strength as before the discharge and the same acid will be ready to be used over again during the next discharge. Since there is no loss of acid by this process, none should ever be added to the solution.

The whole object of charging therefore is to drive from the plates the acid which is now absorbed by them during discharge.

64. The Electrolyte.—The liquid in a storage cell is known as the electrolyte which in the case of the lead cell is a 20 per cent. solution of sulphuric acid. It is important to have the electrolyte of the right strength or the cell will not function properly. The strength of the electrolyte or the proportion of the acid to water is expressed in terms of *specific gravity.*

The *specific gravity* of a compounded solution is a measure of its density or weight as compared to that of chemically pure water. If water be taken as unity (or 1) it is found that certain compounded solutions of acid, etc., are heavier than water by a certain amount. Thus the specific gravity of the electrolyte of one type of lead plate storage cell is approximately 1.215, meaning that if a cubic centimeter of water weighs one gram, one cubic centimeter of the electrolyte weighs 1.215 grams. It is, therefore, evident that the greater the proportion of the acid in the electrolyte of a storage cell, the higher will be the reading of the specific gravity.

65. The Hydrometer.—The gravity of the solution of a storage cell is measured by an instrument known as a *hydrometer,* a sketch of which is shown in Fig. 80. The long glass rod A-B has the bulb at one end loaded with shot or mercury. When dropped into a solution of acid it sinks to a certain depth, depending on the weight of the liquid. If placed in chemically pure water, the hydrometer would sink to the bottom or at least below the level of the liquid, but if it is placed in a dilute solution of sulphuric acid, a part of the tube protrudes above the surface. The reading of the hydrometer scale at the surface of the solution is a measure of the specific gravity. The specific gravity of the chloride portable storage cell varies between 1.205 and 1.215 and for the various exide cells between 1.280 and 1.300.

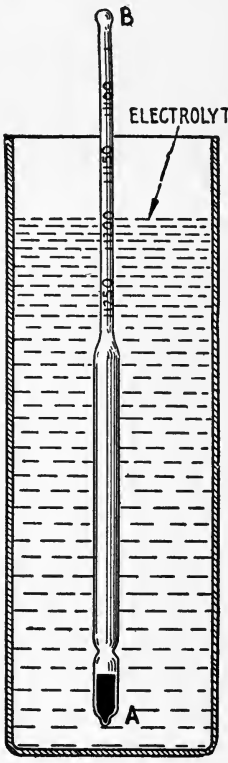

Fig. 80—The Hydrometer.

66. How the Capacity of a Storage Cell Is Rated.—The capacity of a storage cell is rated in *amperehours.* The amperehour is the unit employed to express the equivalent quantity of current represented by current of one ampere flowing through a given circuit for an hour of time. The storage cells used with commercial radio sets are rated at 60 to 224 ampere hours

capacity according to the power of the particular installation. The cells of larger capacity are used for auxiliary lighting service as well as for operation of the radio-transmitter.

A clearer interpretation of the practical application of the term amperehour as applied to the rating of storage cells may be obtained from the following explanation. For example, the chloride type of cell is rated on an 8 *hour basis* and the *exide cell* on a 4 *hour basis.* Thus if the chloride cell is rated as having capacity of 60 amperehours, the normal discharge rate is determined by simply dividing the rating 60 by 8 or 7½ amperes, which is the normal current in amperes to be taken from the cell during discharge, and in the same manner the normal discharge rate of a 60 amperehour exide cell is found to be 15 amperes. The normal discharge rate of the chloride lead cells (in use in the Marconi Service) is also the normal charging rate, but different charging rates are given for the exide lead cell according to the rated capacity of the battery. Generally at the beginning, the batteries are charged at a heavy rate, but as the charge progresses the charging current is reduced.

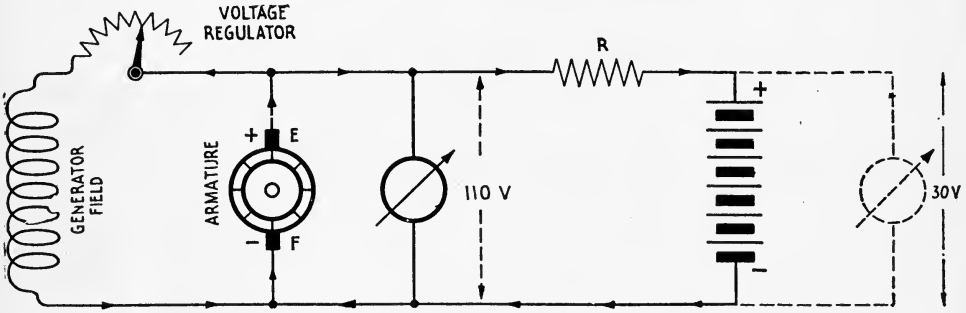

Fig. 81—Simple Charging Circuit.

67. Fundamental Facts Concerning the Storage Cell. The student should bear in mind certain facts concerning the storage cell:

(1) It has low internal resistance and therefore delivers a very strong current.
(2) Due to the absence of polarization, as in the primary cell, the current output does not decrease as rapidly.
(3) The "charging" process requires considerable time—a matter of hours to convert the surface of the plates to so-called "active material."
(4) During the charging period, a stated number of amperes must pass through the cell—the actual value being designated by the maker.
(5) A normal rate of discharge is given by the manufacturers which must not be exceeded except in special types.
(6) The fully charged voltage of the lead cell averages 2.1 volts on open circuit, values as high as 2.5 or 2.6 volts being obtained with the charging current flowing.
(7) The lead cell is said to be discharged when the voltage of the individual cell falls to 1.7 or to 1.8 volts provided the reading is taken at normal rates of discharge current.
(8) The fully charged voltage of the Edison cell is 1.2 volts.
(9) The Edison cell is said to be discharged when the voltage of the cell, at normal discharge rates, falls to .9 volts.
(10) The Edison cell and the lead cell differ both in material, general construction, and electrolyte.

68. How to Charge a Storage Cell.—*A storage battery is "charged" by connecting the positive terminal of the battery to the positive terminal of a direct current dynamo, and the negative terminal of the battery to the negative terminal of the dynamo,* but a resistance or regulating rheostat must be connected in series with the charging circuit, otherwise, an excess of current will flow and the battery and perhaps the generator put out of commission. This is due to the fact that the storage cell possesses very low internal resistance.

An elementary charging circuit is shown in Fig. 81 where the brushes of the generator

E, F, are connected to the positive and the negative terminals of a 30 volt battery with a *regulating resistance R* connected in series. The resistance of R varies as the normal charging rate of the particular battery under charge, from 5 amperes in the smaller types of cells to 50 or 100 amperes in the larger types. The resistance coil may be of fixed or variable value. It is sometimes fitted with a single blade switch, permitting a portion of the coil to be short circuited, to provide two values of charging current. It is made up of a resistance wire alloy, constructed to withstand continuous flow of current at the normal rating of the battery without overheating.

When the circuit from the charging generator is closed, current flows from plate to plate through the electrolyte until the surface is converted to "active material," the process requiring several hours, according to the degree to which the cell has been discharged. In any case the charging should continue until there is no further rise in either the specific gravity or the voltage.

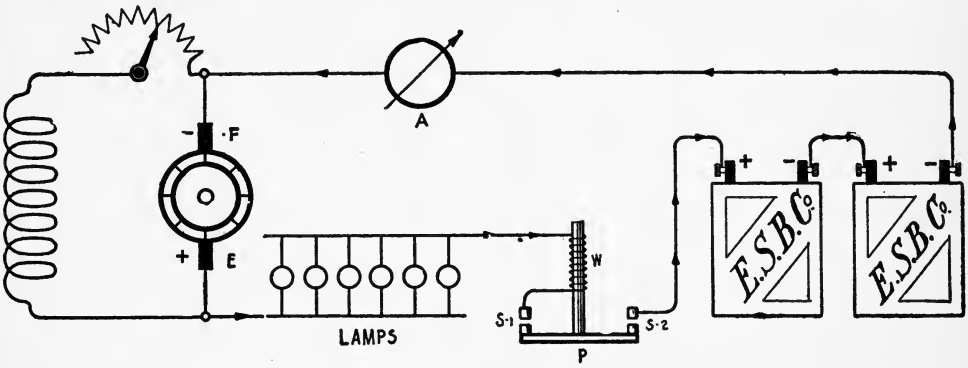

Fig. 82—Diagram of Simple Charging Circuit Including Lamp Bank Resistance and Underload Circuit Breaker.

It should be kept in mind that THE VOLTAGE OF THE CHARGING DYNAMO MUST ALWAYS EXCEED THE MAXIMUM VOLTAGE OF THE STORAGE BATTERY BECAUSE THE VOLTAGE OF THE BATTERY EXERTS A BACK PRESSURE OR COUNTER E. M. F. ON THE CHARGING SOURCE AND IF THE VOLTAGE OF THE DYNAMO IS LESS THAN THAT OF THE BATTERY THE LATTER WILL NOT BE CHARGED.

69. **How to Determine the Value of the Charging Resistance.**—The resistance of the series charging rheostat for a given battery may be determined by Ohm's law. Assume that the battery, Fig. 81, has, when fully charged, a voltage of 30 volts, that the normal charging rate as given by the manufacturer is 6 amperes and the voltage of the generator 110 volts; then the battery exerts a back pressure of 30 volts on the generator and the net effective voltage is 110 — 30 volts or 80 volts.

For ordinary direct current circuits according to Ohm's law,

$$R = \frac{E}{I}$$

but in this case the value of R is determined by

$$R = \frac{E\text{-}e}{I}$$

where E = the voltage of the charging generator,
e = the fully charged voltage of the battery.
I = the normal charging current as given by the manufacture.

Then in the example cited,

$$R = \frac{110 - 30}{6} = 13.3 \text{ ohms.}$$

70. Lamp Bank Resistance.—A bank of 16 or 32 C. P. lamps are frequently employed to adjust the flow of current through a battery undergoing charge. A circuit of this type is indicated in Fig. 82. Since the resistance of the battery is small compared to that of the lamps, the flow of current through the cells is governed by resistance of the lamps.

A 16 C. P. incandescent lamp having a carbon filament passes ½ ampere under an E. M. F. of 110 volts hence 15 such lamps connected in parallel will pass 7½ amperes, about the correct value for the smaller types of lead cells. The strength of the charging current can be regulated in small steps by turning on or off a certain number of lamps.

71. The Use of the Ammeter and the Underload Circuit Breaker.—To permit the charging current to be carefully regulated, the *charging circuit should include an ammeter* as at A, Fig. 82.

A very important protective mechanism for a storage battery charging circuit is an *underload circuit breaker.* The function of this breaker is to open the charging line when the voltage of the charging generator falls below the voltage of the battery. The battery is thus protected from discharge in case the charging generator is stopped without first disconnecting the batteries. A very simple type of underload breaker used on the small panel sets of the Marconi Company is shown in Fig. 82. A solenoid winding W is connected in series with the charging circuit and carries the full value of the charging current, the resulting flux acting upon the plunger P which carries the crossbar and the copper contacts S-1 and S-2.

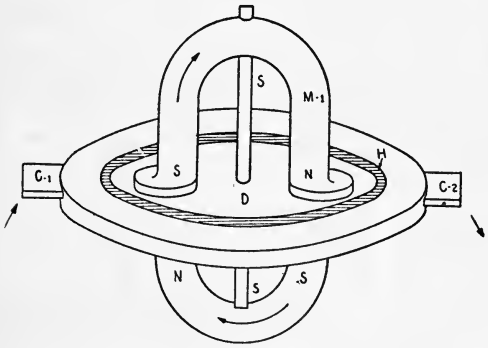

Fig. 83—Motor of Ampere Hour Meter.

When pushed up by hand, plunger P closes the circuit from the charging generator to the battery. The winding W is thus magnetized and holds the iron plunger in this position until the charging circuit is actually interrupted or the voltage of the generator falls below the battery. In event of either happening, the plunger drops downward, breaking the circuit.

72. The Ampere-Hour Meter. A particularly useful instrument for denoting the state of "charge" or "discharge" of a storage battery is the *ampere-hour meter,* which in essence is a specially constructed small motor connected in series with the charge and discharge of a storage battery.

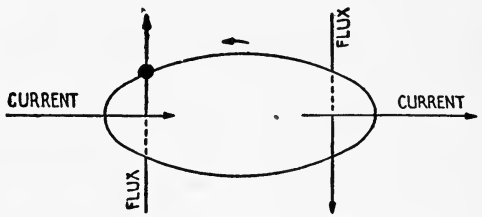

Fig. 84—Sketch Showing the Direction of Fluxes in Ampere Hour Meter Motor.

The motor is geared to a pointer moving over a dial calibrated in ampere hours, and therefore permits a direct reading of the quantity of current flowing during the discharge of a storage cell.

A diagram of the motor of the Sangamo ampere hour meter is given in Fig. 83. It consists of a copper disc D, floated in a pan of mercury between the poles of a permanent magnet to which current is lead by the contacts C-1, C-2. The current of electricity enters the contact C-1, passes through the comparatively high resistance mercury H, to the edge of the low resistance copper disc D, across the disc to the mercury H, and out at contact C-2. The magnetic flux cuts across the disc on each side from N to S, making a complete circuit through M-1 and M-2. The relative directions of the magnetic flux and the current of electricity as well as the resulting motion are shown in Fig. 84.

According to the laws of electromagnetic induction, if a current-carrying conductor cuts a magnetic field at right angles, a force is exerted upon the conductor tending to push it

at right angles to both the current and the flux; hence the disc of the meter revolves at a uniform rate.

When fitted with an eddy current damper or generator which requires a driving force directly proportional to the speed of rotation, the mercury motor generator becomes a meter. The speed of such a meter is a measure of the current or the rate of flow of the electricity through the motor element and each revolution of the motor corresponds to a given quantity of electricity. Then by connecting a revolution counter to this motor generator we have a means of recording the total quantity of electricity in ampere hours that is passed through the meter.

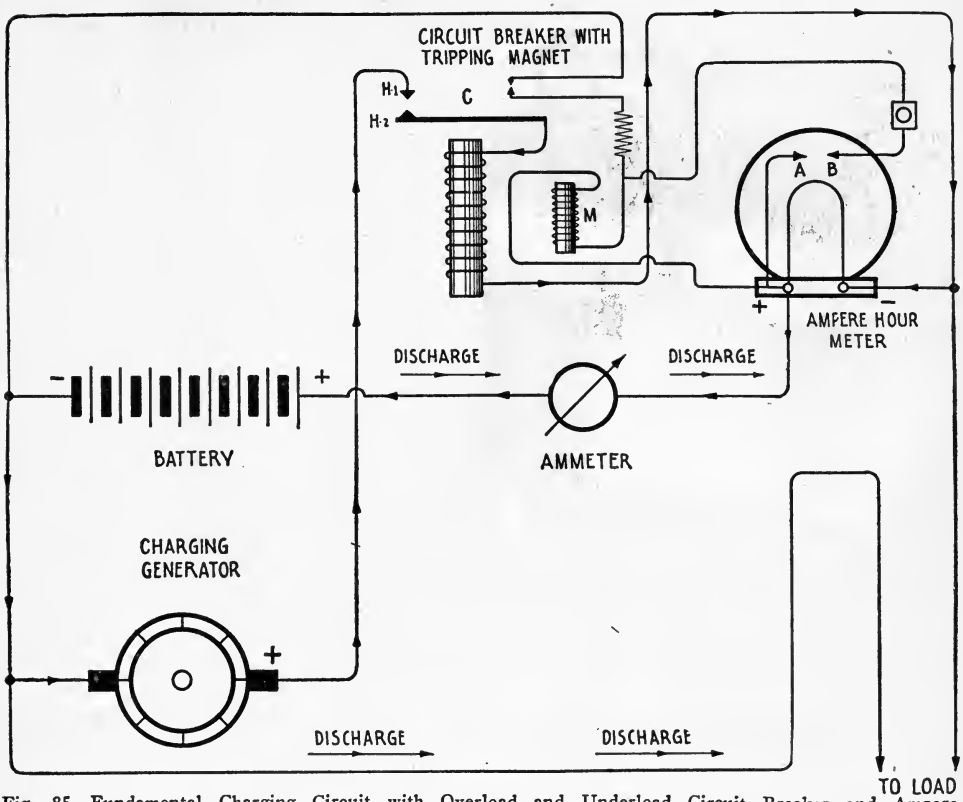

Fig. 85—Fundamental Charging Circuit with Overload and Underload Circuit Breaker and Ampere Hour Meter.

During discharge of a storage battery the pointer of the ampere hour meter moves from the zero position of the scale in a clockwise direction toward the full scale reading, but when the battery is placed on charge the pointer moves in a counter-clockwise direction toward the zero division of the scale. When it has reached this point, the contacts A and B Fig. 85, are closed and the *circuit breaker is tripped by the no voltage release magnet M.* This cuts off the charging current. Current flows through winding M only during the time required to throw the breaker, the current being turned off automatically, through a set of contacts, by the breaker armature. The circuit for the no-voltage release magnet is closed when the circuit breaker proper is set by hand.

Fig. 85 is a fundamental diagram of the charge and discharge circuit of a storage battery installation having a Sangamo ampere hour meter. The meter is connected in the circuit in such a way as to indicate the *quantity of current taken in by the battery during the charging period* and that *taken out by the motor generator or auxiliary lights on discharge.*

The direction of the current through the ampere hour meter on discharge is opposite to that when the battery is on "charge," hence the movement of the motor is reversed accordingly.

For sake of clearness the necessary switches for placing the battery on charge or discharge have been omitted.

The short arrows, Fig. 85, indicate the direction of the charging current while the batteries are on charge and the long arrows indicate the direction of current during discharge. This diagram is not intended to convey a description of the mechanical construction or operation of the circuit breaker, but merely serves to show the complete fundamental charging circuit.

73. **Overcharge.**—Theoretically we should be enabled to draw the same quantity of current from a storage battery upon discharge as put into it on charge, but practically this cannot quite be done. The plates of the battery must be given an occasional overcharge to keep them in good working condition, that is, there must be put into the battery under normal conditions a greater quantity of current than is taken out of it. Ampere hour meters are constructed to take care of the required overcharge automatically by a device known as a resistor which cannot be explained in detail here. Briefly it causes the pointer of the ampere hour meter to move to the zero position of the scale from a given higher reading, at a slower rate than that which brought it to the maximum reading thus giving the requisite overcharge. But with all this, the readings of the ampere hour meter can not quite keep pace with the state of the storage battery, hence, it is necessary from time to time to move the pointer of the ampere hour meter from the zero position to a reading corresponding to from 20 to 50 ampere hours, after which the battery is placed on charge until the pointer again returns to the zero position.

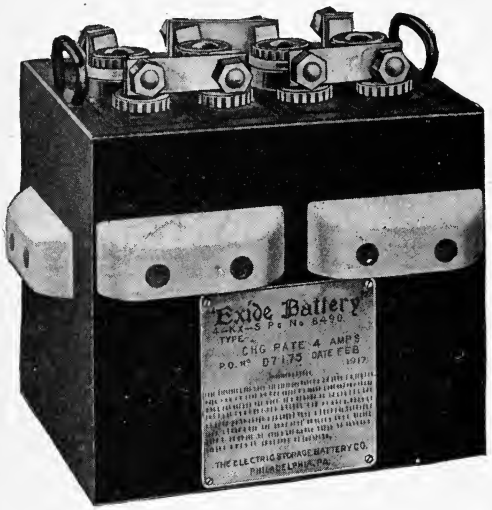

Fig. 85a—Portable Exide Storage Cell, Supplied with Marconi Emergency Sets.

74. **How to Charge a Battery when the Voltage Exceeds that of the Charging Generator.**—As mentioned in a previous paragraph, the voltage of the charging generator must exceed the combined fully charged voltage of the cells. Since the auxiliary battery for a radio set consists of 60 cells, and their voltage combined is 126 volts, they cannot be charged in series from a 110 volt source of direct current. The battery must be split into two units of 30 cells each, which are connected in parallel and finally to the terminals of a charging generator, but on discharge the cells are connected in series.

A completely satisfactory diagram of this connection appears in Fig. 86, where the four-blade switch, when thrown to the *"charge"* position, connects battery A and battery B in parallel, but in the discharge position reconnects them in series giving approximately 126 volts for the operation of a standard motor generator. This diagram shows (1) the position of the charging resistance and the underload circuit breaker in the charging circuit, (2) the voltage of the generator, (3) the voltage of the individual battery units and (4) the final discharge voltage of the cells. The charging dynamo in the case of a marine radio installation is the ship's generator, which is situated at some point in the ship's engine room.

It has been mentioned that two values of charging current are employed for the exide type of cells, a heavy value for the start of the charge and a lesser value at the completion of the charge, but no special appliances are fitted to the Electric Storage Battery Company's

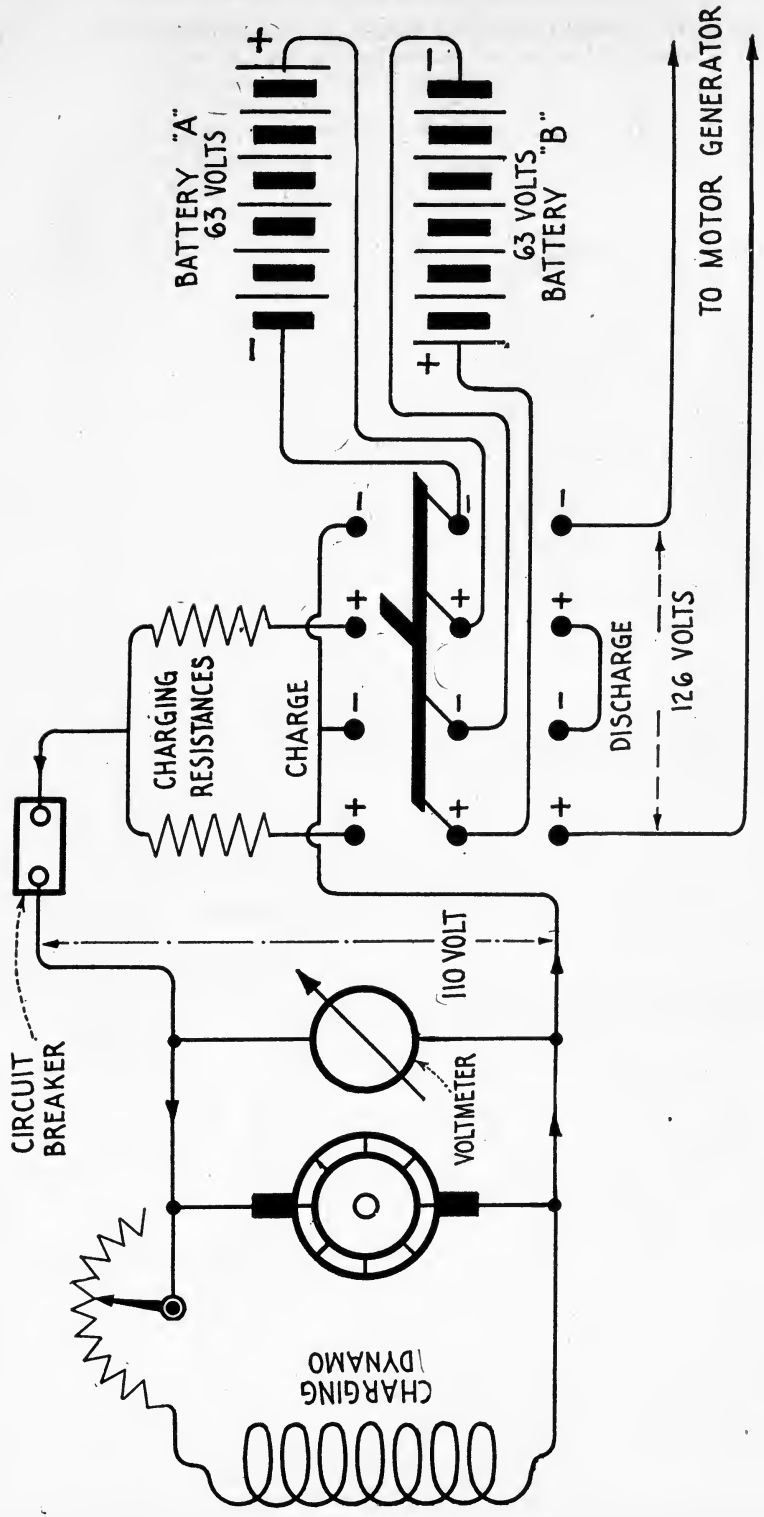

Fig. 86—Diagram for Charging Batteries in Parallel and Discharging in Series.

ship's charging panel whereby these two values can be obtained. The flow of charging current is automatically taken care of by the battery, the counter E. M. F. of which rises as the charge progresses. This gradually reduces the charging current without extra appliances.

75. How to Determine the Polarity of the Charging Generator.—We have mentioned that during *charge the positive pole of the storage batteries must be connected to the positive pole of the dynamo.*

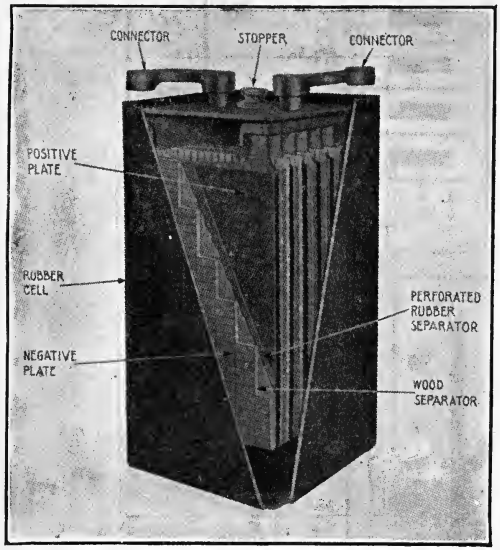

Fig. 86a—Detail of Exide 11 M. V. Storage Cell.

The polarity of the charging mains may be determined in three ways:

(1) By a direct current voltmeter of the magnetic type;
(2) By an electrochemical polarity indicator;
(3) By dipping the terminals of the dynamo in a glass of plain or salt water.

Direct current voltmeters with magnetic mechanism have a (+) and (—) mark on the binding posts. If connected improperly to a source of direct current the pointer instead of swinging in the direction of the full scale position will move to the left of the zero position, but when connected properly, the pointer moves from left to right. The wire of the dynamo connected to the (+) binding post of the voltmeter is the positive wire and the other, of course, the negative wire.

Chemical polarity indicators have a solution of iodide of potassium mixed with starch sealed in a glass tube provided with terminals. When connected to the terminals of a charging line, current flows through the liquid and decomposes the solution, turning the positive terminal of the tube blue.

The polarity of the charging source may be ascertained by dipping the terminals of a D. C. line in a glass of plain water as in Fig. 87 or preferably salt water. Bubbles will appear at the negative terminal of the line. The negative wire should be connected to the negative pole or terminal of the battery.

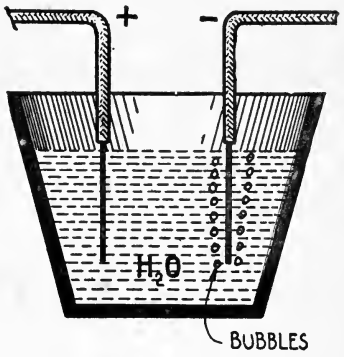

Fig. 87—Method of Determining the Polarity of a Generator.

76. Determination of the State of Charge and Discharge of a Battery.—The following instructions apply to the lead plate cell. It is not difficult to determine the state of charge and discharge of a storage battery if the circuit includes an amperehour meter. To illustrate the utility of this instrument, assume a 60 amperehour battery which is being discharged through the windings of a motor generator. Fully charged, the pointer of the amperehour meter rests at zero but as the discharge progresses the pointer gradually moves in a clockwise direction and if it then rests at 40, it is an indication that 40 amperehours of current have been taken from the battery which, of course, is not completely discharged. In order that the battery may be ready always for emergency use, the changeover switch on the charging panel should be immediately thrown to the "charge" position, the underload circuit breaker closed, whereupon the pointer of the amperehour meter will, as the charge progresses, move counter clockwise or towards the zero position of the scale.

When this position is reached the charging current is thrown off automatically by means of the no voltage release magnet attached to the underload circuit breaker.*

In event the equipment is *not* fitted with an amperehour meter, the full charged condition of the chloride cell may be determined, by charging at normal rates for two hours after gassing begins and for the exide cell, one hour after gassing begins.

Each cell should then indicate 2.08 volts on open circuit and the *gravity of the solution should have reached a maximum value.*

The operator should understand that a storage cell is considered to be fully charged when during charging there is no further rise in either gravity or voltage; and that in any case a maximum value of voltage and gravity should be aimed for rather than a final value.

The state of a storage battery may be obtained in another way by placing it on discharge at normal rates and observing the reading of the voltmeter with the current flowing. If the reading per cell is less than 1.8 volts, the battery should be placed on charge immediately. It should be kept in mind that the specific gravity of the electrolyte falls on discharge and rises on charge, hence a hydrometer may be used in place of the amperehour meter for determining the condition of a cell but the amperehour meter is the most convenient for the purpose.

In large isolated battery units, a temperature correction table is given to permit changes in temperature to be accounted for when taking readings of the specific gravity, but such tables are not furnished for the battery sets employed in marine radio sets.

77. Keeping the Level of the Electrolyte.—There is no loss of electrolyte in the charge or discharge of a battery, except the loss due to spraying. The acid does not evaporate but the water does. Hence from day to day enough water must be added to keep the electrolyte at a level of ½ to ¾ inches above the plates.

Replenishing of the water is more important and must be attended more frequently in hot climates than in temperate zones.

78. Protecting the Cells from Acid Spray.—At the completion of a charge, all cells should be thoroughly wiped off first with a damp cloth followed by a dry cloth. Surface leakage of the current is thus prevented.

The cells should also be protected from salt spray, the accumulation of dirt and dust, etc. Contacts and connections must be kept scrupulously clean and should be thoroughly examined from time to time.

79. General Instructions for the Portable Chloride type of Accumulators.—The following instructions apply to the *portable "chloride"* accumulator of the Electric Storage Battery Company:

The proper polarity having been obtained, charge the battery at the rate given on the name plate until there is no further rise in the voltage of each cell of the battery and each cell has been gassing or bubbling freely for at least two hours and there is not further rise in the specific gravity of the electrolyte over the same period.

If the temperature of the electrolyte rises to 100 deg. Fahrenheit during the charge, the current should be reduced or stopped until it lowers.

The voltage at the end of the charge may be between 2.4 and 2.6 volts per cell, depending on their temperature and age.

The higher voltages are obtained on new batteries with low temperature; on all batteries at high temperatures, the lower voltages are obtained.

It therefore must be understood that in determining the completion of a charge, a fixed or definite voltage is not to be considered, but rather a maximum voltage as indicated by there being no further rise in the voltage over a period of two hours. It is of the utmost importance that the charge be complete.

Great care must be taken not to bring a naked flame near the openings in the top of the battery during or immediately following a charge.

The proper specific gravity of the electrolyte at the end of charge is 1.210, but a variation of from 1.205 to 1.215 is allowable.

*As already explained the battery must be given a small overcharge occasionally and therefore when the pointer has returned to the zero position, it is moved by hand to point 15 or 20 (or possibly higher depending upon the capacity of the battery) the battery being again placed on charge until the pointer returns to the zero position.

Do not adjust the specific gravity except when the battery is fully charged.

In ordinary use, there is no occasion to adjust the electrolyte of the cell oftener than *once in every three or four years.*

After adjusting, charge for an hour in order to thoroughly mix the liquid just added with the electrolyte.

By all means *do not add electrolyte until it is determined that the specific gravity cannot be brought up to the proper point* by charging.

The sediment which gradually accumulates in the bottom of the jars must not be allowed to touch the bottom of the plates as if it does serious injury may result. It is best to overhaul the cells and remove the sediment at least once a year.

If the battery is not to be used for a considerable period, care should be taken that it is charged once every two months and that the plates are kept covered by regularly adding water.

If it is not possible to charge at least once every two months, the battery may be taken entirely out of service as follows: Fully charge the battery, remove the vent caps, pour out the electrolyte by turning the case upside down, fill with fresh, pure water and allow to stand 12 or 15 hours. Then pour off the water, wipe the case dry, grease the terminals and the battery can stand indefinitely.

80. General Operating Instructions for the Exide Cell. The following instructions apply specifically to the Exide cells supplied to marine radio sets, particularly the 60 cell M. V. 11 type. (E. S. B. Co.)

Keep the level of the electrolyte always above the top of the plates by replacing evaporation with pure, fresh water (never anything else) to a height of one-half inch (not more) above top of plates. The best time for adding water is just before a charge. Do not use metallic receptacles for holding the water.

Keep flames of all kinds (match, candle, lantern, cigar, etc.) away from battery at all times.

Battery is to be "floated" at all times, except when charging or discharging. When floating, both lamps on battery switchboard will burn dimly. If either lamp goes out, immediately replace it with another of same rating.

Twice each month, preferably when in port, charge the battery by opening the 6 pole switch, closing the circuit breaker, and again closing the 6 pole switch to the charge side. Move the needle of the ampere hour meter back to about 50 and charge until the pilot cell gravity and the voltage of each side have remained constant for one hour and all cells have been gassing or bubbling freely for the same length of time. This means that, under normal floating conditions, the charge will be of about one and one-quarter hours' duration. After the charge reset the needle of the ampere hour meter to zero. Raise the cover of the battery box during this charge.

After a discharge of any kind immediately put the battery on charge and continue the charging until the needle of the ampere hour meter has returned to zero.

In order to check the generator polarity and to guard against the battery becoming accidentally discharged through the reversal of the generator, read the voltmeter frequently with the voltmeter plug in openings marked "Bus."

If the polarity has changed, throw over the switch marked "Reversing Switch."

Before the semi-monthly charge, read and record the specific gravity of each cell of the battery.

On the day of the semi-monthly charge, after the charge has been completed, read and record the specific gravity of the pilot cells.

On other days read and record the specific gravity of the pilot cells at the same time each day. These readings will indicate the state of charge of the battery and will be a check on the "Floating."

On the semi-monthly charges the vent plugs should be replaced after charges are completed.

If the gravity of any cell shows a marked falling off relative to the rest of the cells, promptly investigate the cause and correct it.

If a jar develops a leak, promptly replace it.

If a cell becomes "dead" from a leaky jar, cut it out of circuit by opening up the connector and restore the circuit with a jumper.

When charging, keep the bus voltage at 110 volts, as if it is low the charging rate will be reduced and the time required to charge correspondingly increased.

Keep everything about the battery clean and dry.

Keep terminals and connections tight and free from corrosion.
Do not allow any impurities to get into a cell.

81. The Edison Storage Battery.—The Edison cell differs from the lead cell both in the construction of the plates and the electrolyte. The active materials of this cell are iron oxide and nickel hydrate. The electrolyte is a 21 per cent. solution of potassium hydrate mixed with a small amount of lithium hydrate.

The negative plate consists of a nickel-plated steel grid, into the pockets of which are hydraulically pressed, perforated, corrugated steel pockets which have been filled and packed with iron oxide, to which has been added a small amount of metallic mercury.

The positive plate consists of a nickel-steel grid to which are secured perforated steel tubes reinforced by seamless steel springs. These tubes are filled with alternate layers of nickel hydrate and very thin plate nickel firmly and carefully packed by a loading machine.

82. The Charge and Discharge of the Edison Cell.—The process taking place in an Edison cell during charge and discharge is as follows:

The first charging of an Edison cell reduces the iron oxide to a metallic iron, while converting the nickel hydrate to a very high oxide, black in color. On discharge, the metallic iron goes back to iron oxide and the high nickel oxide goes to a lower oxide, but not to its original form of green hydrate. On every cycle thereafter the negative charges to metallic iron and discharges to iron oxide while the positive plate charges to a high

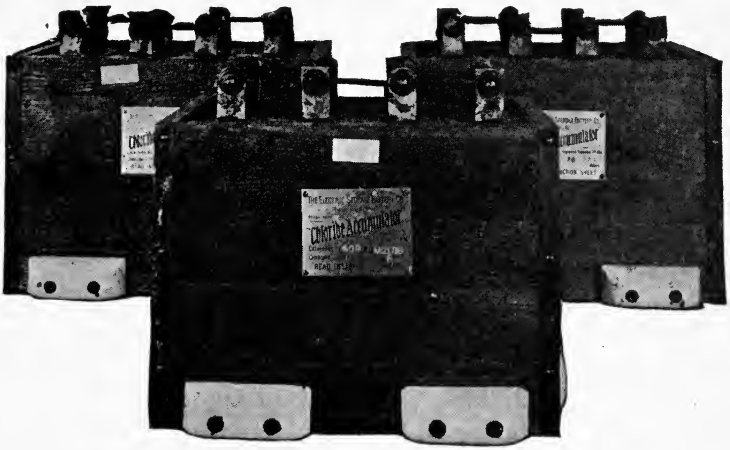

Fig. 87a.—Group of Electric Storage Battery Co.'s Portable Chloride Storage Cells.

nickel oxide. Current passing in the direction of charge or discharge, decomposes the potassium hydrate of the electrolyte and the oxidation and reduction of the electrode are brought about by the action of its elements. An amount of potassium hydrate equal to that decomposed is always reformed at one of the electrodes by a secondary chemical reaction, in consequence there is none of it lost and its density remains constant.

The final result of charging is, therefore, the transference of oxygen from the iron to the nickel electrodes and that of discharging is the transference back again.

A hydrometer reading of this cell is not required as the specific gravity of the electrolyte does not change with the state of charge or discharge and consequently the only direct method to measure the state of charge is with an ampere hour meter, the hydrometer being of no use.

PART VI.

THE RADIO TRANSMITTER

CONDENSERS—OSCILLATION GENERATORS—RADIATION OF ELECTRICAL WAVES—DAMPING OF OSCILLATIONS.

83. Methods of Generating Radio Frequency Current. 84. The Condenser. 85. Connections for Condensers. 86. How to Place a Charge in a Condenser. 87. Analysis of a Spark Discharge. 88. Effect of Resistance on Oscillations. 89. Electrical Resonance. 90. The Open Circuit Oscillator. 91. The Length of the Electric Wave. 92. The Determination of Wave Length From the Inductance and Capacity. 93. Logarithmic Decrement of the Oscillations. 94. Methods of Exciting Oscillations in an Aerial. 95. The Reaction of Coupled Circuits. 96. The Standard Waves of Commercial Wireless Telegraphy. 97. Fundamental Circuit of a Complete Radio Transmitter. 98. Simple Explanation of the Circuits. 99. Numerical Values for a Standard Radio Set.

The electric waves for commercial wireless telegraphy are set into motion by alternating currents or electrical oscillations at frequencies varying from 25,000 to 1,000,000 cycles per second. We shall confine this chapter to an explanation of the apparatus for the production of *damped electrical oscillations* which are employed almost universally for wireless ship to shore communication.

83. Methods of Generating Radio Frequency Current.—In order to distinguish alternating currents of the order of frequency employed in wireless telegraphy from those of a lower frequency corresponding to audible vibrations, the following arbitrary terms are in use; an alternating current of frequency in excess of 10,000 cycles per second is termed a current of *radio-frequency;* below 10,000 cycles per second, it is called a current of *audio-frequency.*

Fig. 88—Oscillations of Constant Amplitude.

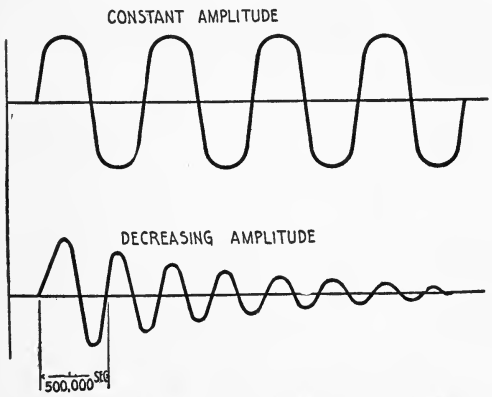

Fig. 89—Oscillations of Decreasing Amplitude.

A current of radio-frequency may consist of either *continuous* or *discontinuous oscillations.* A group of oscillations of continuous amplitude are shown in Fig. 88; a group of discontinuous oscillations appear in Fig. 89.

Continuous oscillations are generated:

(1) By the radio frequency alternator;
(2) By some form of the D. C. arc generator;
(3) By a battery of vacuum tube bulb.

Discontinuous oscillations are generated:

(1) By the charge and discharge of a Leyden jar or battery of condensers.

Electric waves set into motion by alternating current of constant amplitude are called *continuous or undamped waves* and those set into motion by discontinuous oscillations occurring in groups are called *discontinuous waves.* Electrical oscillations of decaying amplitude are also called *damped oscillations.*

Since damped oscillations are generated by the periodic charge and discharge of some form of condenser, certain fundamental facts concerning the condenser will now be considered.

84. The Condenser.—The condenser may be defined as a device to store up electrical energy in electrostatic form and the ability of any material to do this, is termed its *electrostatic capacity* or simply *capacity.*

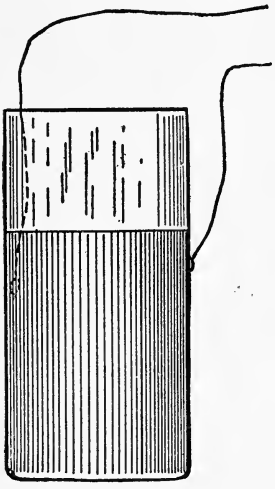

Fig. 90—Simple Copper Plated Leyden Jar.

The most common form of condenser used in wireless systems is the Leyden jar shown in Fig. 90. A glass jar having walls about one-eighth of an inch in thickness is coated with tin-foil to within two inches of the top, both inside and outside, connection being made to the inner coating by means of a chain or copper strip. Modern jars are coated with a deposit of silver or copper by an electrolytic process. Another type of condenser consists of a flat plate of glass coated with tinfoil or copper immersed in oil.

Condensers for radio telegraphy may be generally classified under two headings:

(1) High Potential Condensers;
(2) Low Potential Condensers.

Those in the first category have an insulating medium between opposed conducting surfaces of glass, micanite, ebony, or the plates may be sealed in an air-tight chamber pumped to a pressure of 250 pounds.

Those in the second category have an insulating medium of paper, thin sheets of hard rubber, or specially impregnated cloth.

High potential condensers are employed in circuits where the pressure is several thousand volts, while low potential condensers are generally used in circuits having less than 500 volts, the latter figure being an arbitrary one.

A number of condenser jars or Leyden jars connected together are termed a *battery of condensers.*

85. Connections for Condensers.—Condensers may be connected either in series or in parallel. If connected in parallel as in Fig. 91 the total capacity is determined by adding together the individual values, or:

$$C = C\text{-}1 + C\text{-}2 + C\text{-}3.$$

Thus the jars in Fig. 91 have combined capacity of .002 + .003 + .004 or .009 microfarad.

A series connection is shown in the diagram, Fig. 92, where the outer coating of one jar is connected to the outer coating of the next, the inner coating of this jar connected to the inner coating of the next jar and so on.

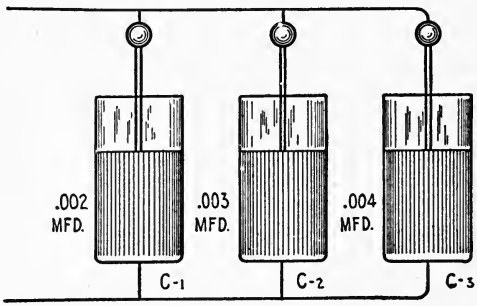

Fig. 91—Condenser Jars in Parallel.

If the jars have equal values of capacity, their combined capacity is obtained

by merely dividing the capacity of one jar by the number of jars in the circuit, but if the jars have unequal values, the formula of reciprocals applies:

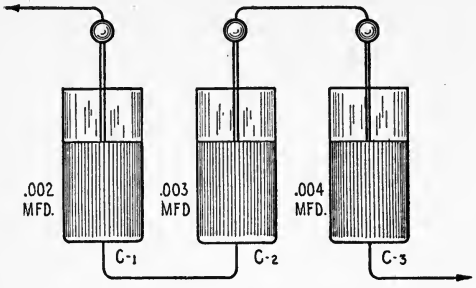

Fig. 92—Condenser Jars in Series.

$$C = \frac{1}{\frac{1}{C\text{-}1} + \frac{1}{C\text{-}2} + \frac{1}{C\text{-}3}}$$

Therefore the capacity of the jars of Fig. 92 $= \dfrac{1}{\frac{1}{.002} + \frac{1}{.003} + \frac{1}{.004}}$

$= .00092$ microfarads.

86. How to Place a Charge in a Condenser.—The condenser of a radio transmitter may be charged from two sources:

(1) By the step-up voltage induction coil;
(2) By the alternating current step-up transformer.

The alternating current transformer is almost universally employed in radio sets to charge the condenser, because it overcomes the limitations of the magnetic interruptor. A transformer can convert a practically unlimited amount of power into high voltage current whereas the induction coil with a magnetic interruptor is limited to about 1 K. W.

A condenser can be given a heavy charge by the apparatus shown in Fig. 93. A high-voltage A. C. transformer, 10,000 to 30,000 volts, is connected to the terminals of three condenser jars, and when the current is turned on, a violent discharge takes place at the gap S-1.

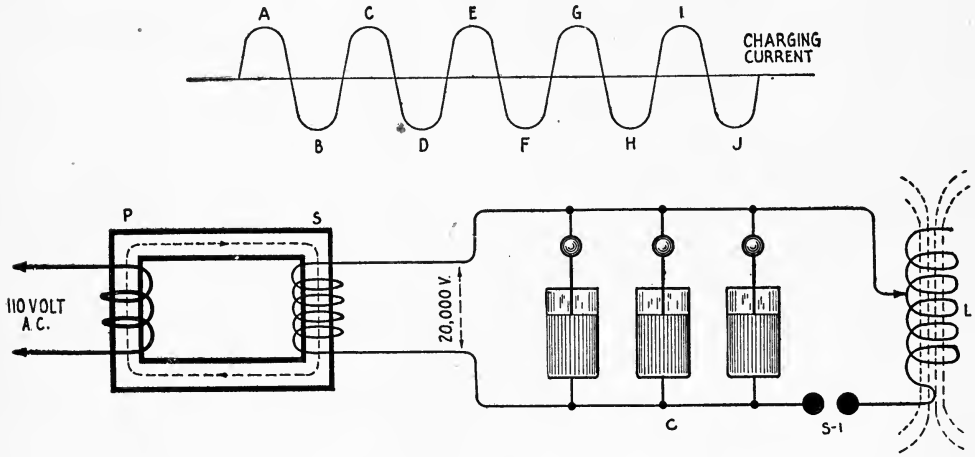

Fig. 93.—Apparatus for Production of Radio Frequency Oscillations.

In the diagram Fig. 93 P is the primary winding of an *alternating current transformer* taking in current at the pressure of 110 volts, which is transformed in the secondary winding S to a pressure of 20,000 volts. C is a *battery of condensers* and L a *radio-frequency coil* consisting of a few turns of rather coarse wire or copper tubing (without an iron core). S-1 is the *spark discharge gap,* the usual form being two brass or zinc rods about ½ inch or less in diameter.

When current is flowing through the primary winding P, with correct separation of the spark gap electrodes, a violent spark discharge will take place following each alternation

of the charging current or at the points, A, B, C, D, E and F shown. The discharge upon analysis is found to consist of groups of radio-frequent oscillations which alternate through the condenser and inductance at an extremely rapid rate* per second of time. More clearly, if the frequency of the charging current is 500 cycles per second (or 1,000 alternations), the condenser C will be charged 1,000 times per second and 1,000 spark discharges will take place at the gap S. This will result in the flow of 1,000 groups of radio-frequent oscillations through the discharge circuit.

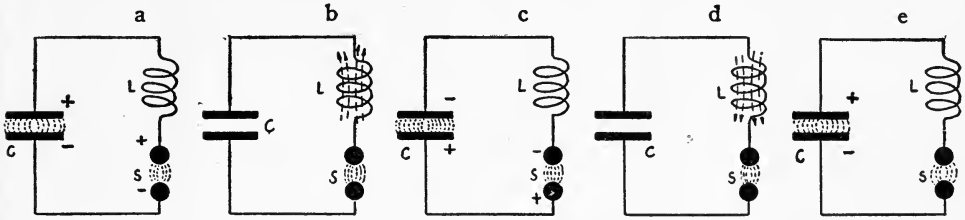

Fig. 94—Complete Cycle of Events in the Discharge of a Condenser.

The term *spark frequency* is employed to designate the number of spark discharges bridging the gap per second of time. In certain types of radio sets the spark frequency equals the alternations of the charging current, but in other types the frequency of the sparks may vary in accordance with the general design of the apparatus (to be explained in the chapter following).

87. Analysis of a Spark Discharge.—A spark discharge such as that created by the condenser Fig. 94 consists of a series of cycles of alternating current of constantly decreasing amplitude, the frequency of which may be very great. These are known as *damped* oscillations, a single group of which are shown in Fig. 89.

The complete cycle of events in the discharge of a condenser may be summarized as follows: Referring to the diagrams, Fig. 94-a-b-c-d-e: Just previous to the first discharge the charge in the condenser takes the form of an electrostatic field which is stored up between the plates as in Fig. 94a. The strain is such that a spark leaps from the positive electrode to the negative electrode of the gap, that is the collapse of the electrostatic field causes a current to flow across the spark gap through the inductance L which sets up a magnetic field around the coil L and connecting leads as in Fig. 94b. Since all of the electrostatic field is converted to current, the *magnetic lines of force collapse back upon the coil L* (and connecting leads), the induced current resulting therefrom recharging the condenser to the opposite polarity as in Fig. 94c. Although charged in the opposite sense, a quantity of electricity less than that of the initial charge is stored between the plates, some of the energy having been expended by the resistance of the circuit and the production of heat, light and sound. The condenser now discharges across the spark gap in the direction opposite to that indicated in 94b and the coil L once more is surrounded by a field (Fig. 94d), but which is opposite in polarity to that of Fig. 94b. These lines of force collapse and recharge the condenser to the polarity indicated at the beginning of the cycle in Fig. 94a, but a charge less in quantity is stored between its plates than at the beginning of discharge.

All this may be summed up by saying that when an isolated charge of electricity is applied to a condenser, and the plates are connected together by an external circuit, their charges do not completely neutralize at the first instant of discharge but, in fact, several alterations of current take place before equilibrium is restored.

This gradual extraction of energy from the oscillations set up by the condenser is termed the *damping of the oscillations* and the decrease in amplitude of the successive cycles can be expressed in a logarithmic percentage.

In the oscillation circuits of a commercial radio-transmitter a number of complete

* The student should compare the time period of a single cycle in a condenser discharge to that of a 500 cycle alternator. A complete cycle takes place in the circuit of the latter in $\frac{1}{500}$ of a second but a single cycle in a group of oscillations of a condenser discharge may take place in various fractions of a second varying from $\frac{1}{25{,}000}$ of a second to $\frac{1}{2{,}000{,}000}$ of a second.

cycles of current may take place, before the charge originally placed in the condenser is completely dissipated.

The frequency of the oscillations in a condenser discharge circuit may be very great, in fact, a single cycle may take place in $\frac{1}{1{,}000{,}000}$ of a second, or, in other words, at the rate of 1,000,000 cycles per second, or at even higher frequencies.

The *frequency of the oscillations* during the discharge of a condenser varies inversely as the square root of the product obtained in multiplying the inductance of the circuit in henries by the capacity in farads, or

$$N^* = \frac{1}{2\pi\sqrt{LC}}$$

If L be converted to centimeters and C to microfarads, the formula becomes:

$$N = \frac{5{,}033{,}000}{\sqrt{LC}}$$

As an example, assume that the condenser C, Fig. 95, has capacity of .001 microfarads and the coil L inductance of 25,000 centimeters (or 25 microhenries) then the frequency

$$N = \frac{5{,}033{,}000}{\sqrt{25{,}000 \times .001}} = 1{,}000{,}000 \text{ cycles per second approximately.}$$

The quotient of this problem does not imply that 1,000,000 *cycles of current actually took place in one second but that during the period of oscillation, the condenser discharged through the inductance at this rate.* It must be remembered that the condenser is being charged by an alternating current and in the case of the 500 cycle alternator it will be charged 1,000 times; hence in one second there are a number of idle periods during which the condenser receives no charge.

The student should not confuse the actual *number of oscillations* in a circuit such as shown in Fig. 95 with the *frequency of the oscillations.* As has just been explained the *oscillation frequency* is determined by the dimensions (inductance and capacity) of the oscillatory circuit whereas the number of oscillations per single spark is a function of the *total damping* of the circuit. It should be understood that an oscillation circuit like that of Fig. 95 if charged by an alternating current always will produce, during discharge, oscillations of constantly decreasing amplitude or *damped oscillations.*

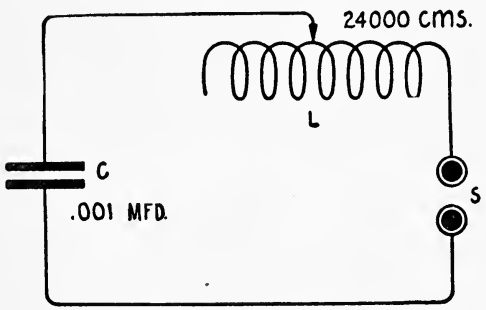

Fig. 95—Closed Oscillation Circuit.

A circuit like that of Fig. 95 is termed a *circuit of radio-frequency.* The complete apparatus may be called an *oscillation generator* and the successive cycles of current are termed *high frequency* or *radio-frequency* electrical oscillations. When this apparatus is employed to generate oscillations of radio-frequency for the production of electric waves, the circuit is denoted as the *closed oscillatory circuit* to distinguish it from the *open or radiating circuit.*

88. Effect of Resistance on Oscillations.—If in any given oscillation circuit,

* If the effective resistance of R of an oscillatory circuit be taken into account, the formula for frequency becomes $N = \frac{1}{2\pi}\sqrt{\frac{1}{LC} - \frac{R^2}{4L^2}}$ but in the closed oscillation circuits of a practical radio telegraph transmitter, the value of R is rather small and is usually ignored.

a certain critical value of resistance is exceeded, the discharge of the condenser will not be oscillatory. The relation between the resistance of a circuit and the non-oscillatory condition is expressed as follows: If the resistance R is greater than $2\sqrt{\frac{L}{C}}$, the circuit is non-oscillatory; if resistance is equal to $2\sqrt{\frac{L}{C}}$ the circuit is just oscillatory. If the resistance is less than $2\sqrt{\frac{L}{C}}$ the circuit will be oscillatory and will be suitable for the production of radio-frequency oscillation.

In this equation R is expressed in ohms, L in henries, and C in farads. The value of $2\sqrt{\frac{L}{C}}$ is seen to be the critical resistance to cause a given circuit to be non-oscillatory.

The elements of a closed oscillation circuit in a radio-transmitter are connected together with very heavy stranded copper wire or copper tubing which, excluding the resistance of the spark gap and other losses, tends to keep the resistance at a minimum; in fact, practical oscillation circuits do not have anywhere near the critical value of resistance.

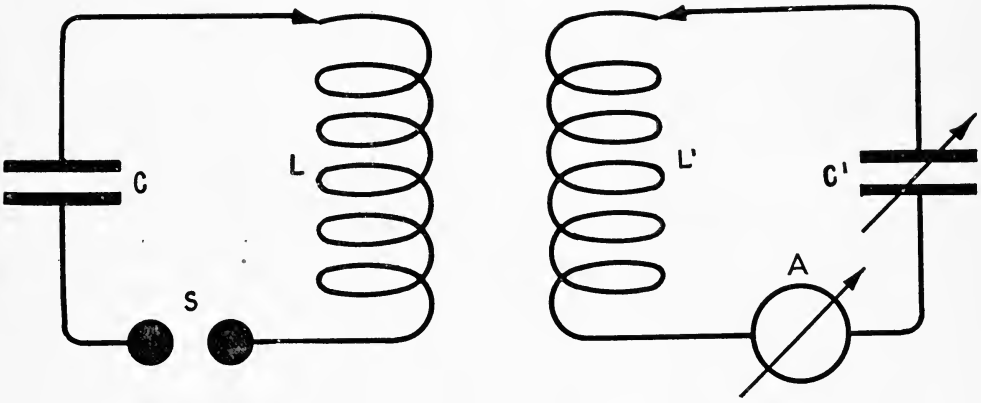

Fig. 96—Circuits for Demonstrating the Phenomenon of Resonance.

Assuming the resistance of the oscillation circuit of Fig. 95 to be negligible, the *frequency of the oscillations can be varied over given practical limits by variation of either the capacity or the inductance.* If turns are added at the coil L, the current oscillates through the circuit at a lower frequency; but if turns are taken out at L, the frequency of the oscillations increases. In a similar manner, increase of capacity at the condenser C will reduce the frequency of the oscillations and decrease of capacity will increase the frequency of the oscillations. In a radio transmitter the capacity of the condenser C is a fixed quantity, and therefore, the frequency of the oscillations is changed by the variable inductance.

89. Electrical Resonance.—The phenomenon of resonance is very striking in circuits of radio-frequency. In order that the energy of the oscillations flowing in one circuit may be transferred most effectively by electromagnetic induction, the two circuits must have the same natural frequency of oscillation. In the diagram of Fig. 96 two circuits of radio-frequency, L, C, S and L^1, C^1, A are magnetically coupled at the coils L and L^1. If circuit L, C, S is set into oscillation and the inductance of L^1, C^1, A carefully adjusted, a point will be found where the hot wire ammeter gives a maximum deflection. At all other points on the inductance L, the hot wire ammeter will show a lower reading. It can be shown that the adjustment of the second circuit where the deflection of the ammeter is maximum, is such that the two circuits have substantially the same period of oscillation or the same natural frequency, and it is under such adjustments only that large values of current can be induced in the circuit L^1, C^1, A.

It was shown in paragraphs 45 and 46 that a much greater current will flow in an alternating current circuit if it contains inductance and capacity of such value that the reactance of capacity and the reactance of inductance are equal and opposite. This condition exists in the circuit L^1, C^1, A of Fig. 96 when the ammeter gives the maximum deflection, e. g., the reactance of the inductance L^1 equals the reactance of the condenser C^1 and therefore the flow of current in circuit L^1, C^1, is governed by its frictional resistance. The maximum amount of energy will be obtained under these conditions.

Two or more circuits of radio-frequency are said to be in electrical resonance when the product of the inductance multiplied by the capacity gives a like figure in each. Or, stated in another way, two circuits are in resonance when they have the same *oscillation constant*. This factor is obtained from the $\sqrt{L\,C}$. Circuits having like oscillation constants will have the same discharge frequency when set into oscillation, and, therefore, they are in electrical resonance. Applying this

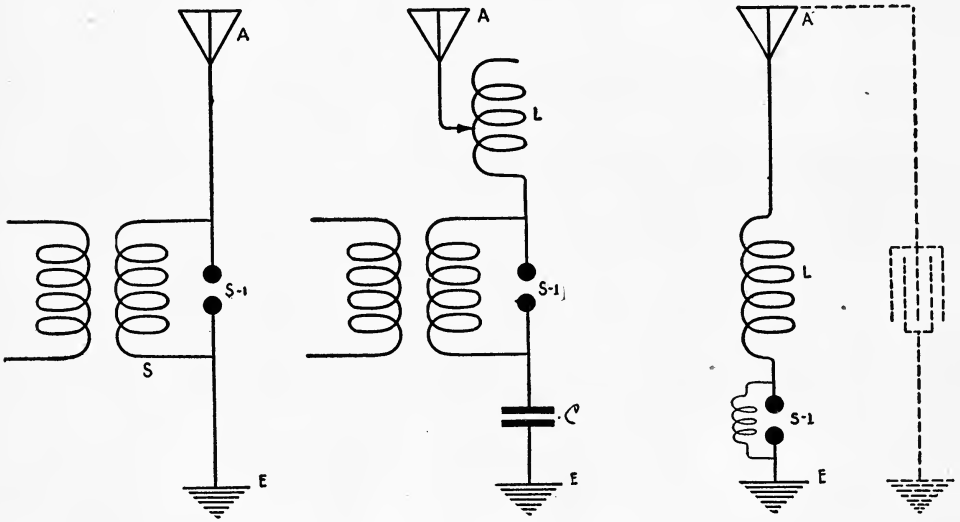

Fig. 97a—Plain Aerial Excitation.
Fig. 97b—Showing Position of Short Wave Condenser and Aerial Tuning Inductance.
Fig. 97c—Illustrating the Effective Capacity of an Aerial.

to the circuit of Fig. 96 we see that no matter how large or how small the values of L and C, L^1 and C^1 may be, if $\sqrt{L\,C} = \sqrt{L^1\,C^1}$, the circuits are in substantial resonance.

As an example: If in Fig. 96, L = 25,000 centimeters; C = .001 microfarads; L^1 = 5,000 centimeters and C^1 = .005 microfarads; then $L \times C = L^1 \times C^1$ (for $\sqrt{L\,C}$ or $\sqrt{L^1\,C^1} = 5$).

90. The Open Circuit Oscillator.—In the closed oscillation circuits of figures 95 and 96, the capacity of the condenser and the inductance of the coil are said to be *concentrated,* the static field being stored up mainly between the plates of the condenser and the magnetic field mainly about the coil.

An open circuit oscillator*, such as shown in Fig. 97a, may have distributed inductance and capacity or both distributed and concentrated values of inductance and capacity as in Fig. 97b.

*The capacity of this vertical wire lies in its ability to store up static lines of force and the inductance lies in its ability to store up magnetic lines of force.

In these diagrams a vertical wire* 100 ft. or more in length extends into space and is connected to earth at the opposite end. A spark gap is included in the circuit at S-1. Although the inductance and capacity of this circuit are distributed throughout its length, it remains a circuit of radio-frequency capable of being set into oscillation. If the spark gap S-1, Fig. 97a, is connected to a source of high voltage S such as the secondary winding of a transformer, an electrostatic field will be stored up in the region about the wire and a discharge will take place across the spark gap. This discharge will consist of radio-frequency oscillations like those of closed oscillation circuits with the exception that a certain amount of the energy will be radiated in the form of electromagnetic waves.

As in the closed circuit, the frequency of the antenna oscillations can be increased or decreased by change of inductance or capacity, but since the vertical conductor has fixed dimensions, the oscillation frequency in practice is changed by artificial means at the base of the aerial. For example, in the apparatus of Fig. 97b, the frequency of the oscillations can be reduced by increase of inductance at L or it may be increased by inserting a condenser at C.

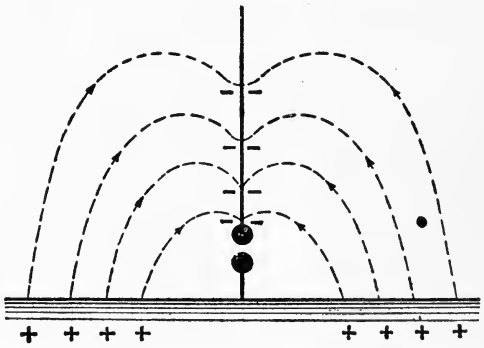

Fig. 98—Electrostatic Field About Aerial Previous to Spark Discharge.

In the diagram of Fig. 97c, the effective capacity of an antenna is represented by a condenser in dotted lines. This in no measure illustrates the true conditions of affairs in the region about a vertical wire, but it may serve to make the oscillating properties of a vertical conductor more or less self-evident.

An open circuit oscillator in radio-telegraphy is known as an *aerial* or an *antenna,* and it is said to be a radiator of electromagnetic waves. In commercial practice, aerials may have 2, 4 or 6 wires connected in parallel.

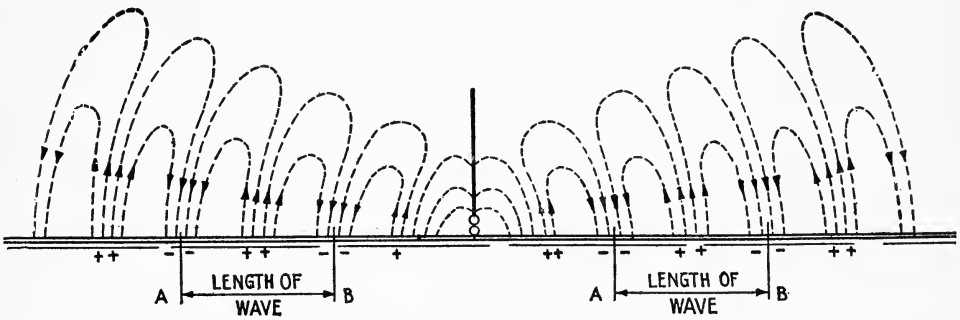

Fig. 99—Detached Loops of Electrostatic Strain.

The complete process of radiation of electromagnetic waves is a complex subject which will only be treated in a popular manner here. The vertical wire of Fig. 98 and the earth may be considered as two sides of a condenser having a certain capacity, and when the spark gap is connected to a source of high voltage, electrostatic lines of force will be stored up in the space surrounding the aerial and when the maximum charge has been reached, a discharge takes place across the spark gap. Immediately the spark discharges, part of the electrostatic field is converted into current and the remainder into a wave motion.

The wave motion consists of an expanding static field (as shown in Fig. 99) which is

accompanied by a magnetic field both being radiated at right angles to each other and to the direction of propagation. (The magnetic field for a single cycle of current in the oscillator is shown in Fig. 100). This wave motion is propagated through space at a velocity of 186,000 miles per second corresponding to 300,000,000 meters.

At a distance from the aerial system and near to the earth we may crudely represent the fluxes of this wave motion by the circles and arrows of Fig. 101. The vertical arrows represent the electrostatic field and the small circles the magnetic field. If these two fluxes act upon another vertical conductor (or elevated capacity) of identical natural frequency of oscillation as the transmitter aerial, a feeble current will be induced which can be detected by several methods. If means are provided to control the energy of the radiating station in the form of the dots and dashes of the telegraph code and if appropriate devices are supplied at the receiving station whereby the received energy can be interpreted or made audible, we then have a complete system of wireless telegraphy.

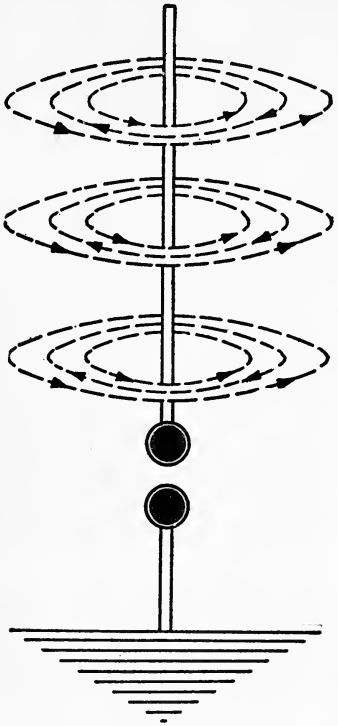

Fig. 100—Magnetic Field around an aerial for three alternations of current.

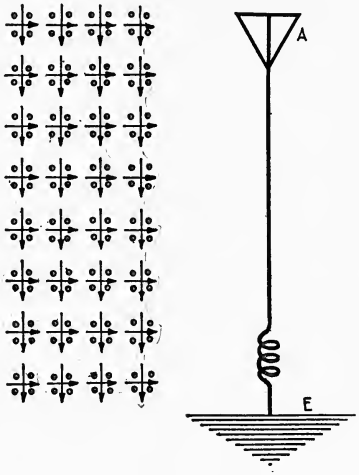

Fig. 101—Aerial in Path of Advancing Electromagnetic Wave.

91. The Length of the Electric Wave.—If we were to determine the length of a single wave, in a wave motion like that of the diagram Fig. 102, we would simply measure the physical distance between two points in the successive waves where the disturbance is at a maximum or a minimum, as from A to B or C to D, or between any two points of equal disturbance. Similarly the distance between two points in two successive electric waves where the electrostatic or the electromagnetic field is maximum and in the same direction would be the wave length of the electromagnetic wave. The distance from A to B in Fig. 99 represents the length of one complete wave, which can be expressed in feet or in meters. *The standard wave lengths of commercial radio-telegraphy are* 300, 450 *and* 600 meters corresponding approximately to 1,000, 1,500 and 2,000 feet.

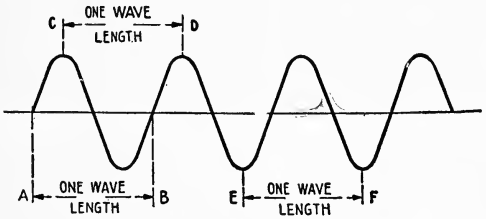

Fig. 102.—Showing Measurement for the Length of a Single Wave.

The relation between the velocity of electric waves, the length of a single wave and the number generated per second, can be explained as follows: Assume, for example, that 1,000,000 waves pass a given point in a second of time and that each wave is of 300 meters length; then the distance through which the first wave has travelled in one second will be equal to the number of waves multiplied by the length of one wave or 1,000,000 × 300 or 300,000,000 meters. In other words, the distance travelled by the wave motion in one second is the velocity of the wave. This may be written:

Velocity = (Number of waves) × (Length of a single wave), which may also be written:

$$\text{Length of a single wave} = \frac{\text{the velocity of electric waves}}{\text{the number of waves}}$$

It has been proven by experiment that the velocity of electromagnetic waves is practically the same as the velocity of light which may be taken as 186,000 miles per second or the equivalent of 300,000,000 meters. Keeping in mind that a single cycle of current in an open circuit oscillator sets into motion a single electric wave, the foregoing formula can be written:

$$\text{Length of one wave} = \frac{300{,}000{,}000}{\text{frequency of the oscillations}}$$

Hence if a vertical conductor oscillates at a frequency of 500,000 cycles per second, the length of one wave in the resultant wave motion will be $\frac{300{,}000{,}000}{500{,}000} = 600$ meters.

If the wave length is expressed by the symbol λ, the velocity of electric waves by V and the frequency of the oscillations by N, the formula may be written:

$$\lambda = \frac{V}{N}$$

A table of standard wave lengths corresponding to various oscillation frequencies follows:

Wave Length in Meters.	Frequency in Cycles per Second.
200	1,500,000
300	1,000,000
450	666,666
600	500,000
1000	300,000
2000	150,000
3000	100,000
6000	50,000
8000	37,500
10000	30,000

92. The Determination of Wave Length from the Inductance and Capacity.—The length of the wave radiated from an open circuit oscillator can be calculated directly from knowledge of the effective* inductance and the effective capacity of the aerial. The formula may be written:

$$\text{Wave length} = 38 \times \sqrt{L\,C}$$

where L = the inductance in centimeters;
and C = the capacity in microfarads.

If an inductance coil is introduced at the base of an aerial, the formula must be modified to read:

$$\text{Wave length} = \frac{6.2832}{K} \times 9.5 \times \sqrt{L\,C}$$

where K = a certain correction factor (see appendix, section C).

The wave length of a straight vertical aerial of the type indicated in Fig. 97a can be determined approximately from the physical dimensions. The length of the wave radiated from a grounded vertical oscillator is found to be approximately 4.3 to 4.5 times its length. Therefore if the vertical wire of Fig. 97a is 100 ft. in length, a single electric wave would have length of 4.3 × 100 = 430 ft. and since 1 meter = 3.25 feet, the wave length is approximately 132 meters. If the aerial consists of several wires connected in multiple, the factor 4.3 does not apply owing to the increase in the capacity of the aerial system. However, in the case of a 4 wire aerial, the wires being spaced about 2½ ft. apart, we may assume the factor of 4.4 to 4.8 which multiplied by the total length of the aerial in feet or meters gives an approximation of the fundamental wave length.

*The effective capacity is the capacity of the aerial as an element of an oscillation circuit. This value varies with each change of λ.

When we speak of the *wave length of a closed oscillation circuit* reference is made to the particular frequency at which the circuit oscillates and to the length of a single wave in the resultant wave motion if the circuit were radiative. Thus if the frequency of a given closed oscillation circuit is 500,000 cycles per second, it would correspond in the case of an open circuit oscillator to a wave length of 600 meters. Hence, we would state that the wave length of the closed oscillation circuit is 600 meters.

The wave length of a closed oscillation circuit may be computed as follows:

$$\text{Wave length} = 59.6 \times \sqrt{L\,C}$$

where L = the inductance of the circuit in centimeters;
and C = the capacity of the condenser in microfarads.

We see from this that if a given closed oscillation circuit had inductance of 10,000 centimeters and capacity of .01 microfarads, the wave length would be $59.6 \times \sqrt{100} = 596$ meters.

93. Logarithmic Decrement of the Oscillations.—When electrical oscillations are created in an antenna or other circuit by means of condensers discharges, each electric spark discharge creates a train of oscillations which die away. The oscillations are assumed to decay away according to the law that the ratio of any oscillation to the one preceding is constant. This constant ratio is called *the damping* of the oscillation and the *Naperian logarithm of the ratio of one oscillation to the preceding one is called the logarithmic decrement.*

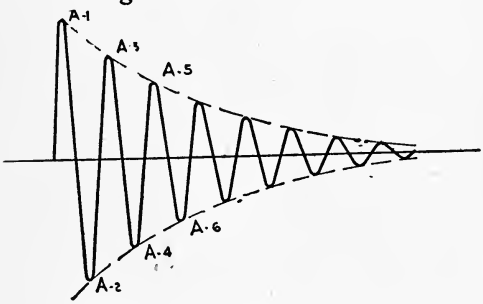

Fig. 103—Highly Damped Oscillations.

Thus in the group of oscillations of Fig. 103, the maximum amplitudes of successive alternations are represented by A^1, A^2, A^3, A^4, etc., and

$$\frac{A^1}{A^3} = \frac{A^3}{A^5} = \frac{A^5}{A^7}, \text{ etc.}$$

In terms of logarithms we may write

$$\frac{A^1}{A^3} = \epsilon^{\delta}$$

where ϵ = base of the Naperian system of logarithms;
δ = a constant termed the logarithmic decrement.

By transposition

$$\delta = \log.\ \epsilon\ \frac{A^1}{A^3}$$

If we assume that the oscillations in a circuit are extinguished when the amplitude of the last oscillation is .01 of the initial oscillation, the complete number of oscillations (M) in a spark discharge can be computed as follows:

$$M = \frac{\log \frac{A^1}{A^x} + \delta}{\delta}$$

If we denote the last oscillation by A^x then $\frac{A^1}{A^x} = 100$, and since the Logarithm of 100 = 4.605 then

$$M = \frac{4.605 + \delta}{\delta}$$

Hence in a group of oscillations

Where $\delta = 0.1$

$$M = \frac{4.605 + 0.1}{0.1} = 47 \text{ complete oscillations.}$$

The *tuning qualities* of a train of electric waves from any given transmitting station depend greatly upon the decrement of the oscillations and, therefore, the determination of the quantity is an important measurement. It is found by experiment that a *transmitter having less than 24 complete oscillations in the antenna circuit* per single spark discharge, possesses undesirable tuning qualities and will interfere with the operation of other radio stations not tuned to the same wave length.

Fig. 104—Feebly Damped Oscillations.

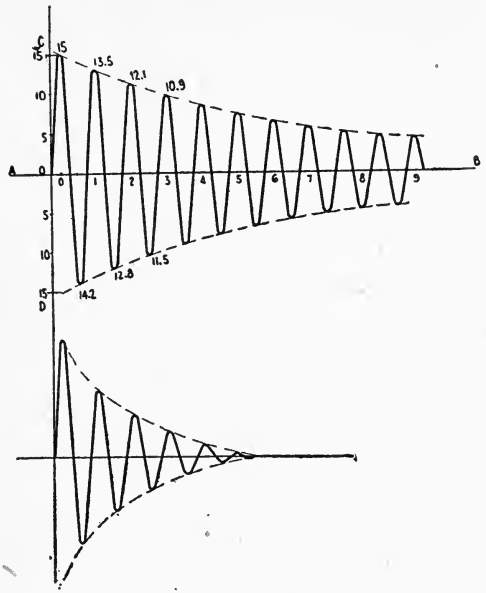

Fig. 105—Oscillations with Excessive Damping.

A group of 24 complete oscillations corresponds to a decrement of 0.2 for a complete oscillation which is the arbitrary figure enforced by U. S. Statutes. This means that if the oscillations in a given antenna circuit have a decrement of 0.2, the logarithm of the ratio of $\frac{A^1}{A^3}$ will be 0.2. (The number corresponding to the logarithm 0.2 is 1.2, hence the ratio of $\frac{A^1}{A^3}$ must be 1.2 for a decrement of 0.2.)

A group of *oscillations of feeble damping* are shown in Fig. 104; a *highly damped group* in Fig. 105. If the conditions of damping depicted in Fig. 104 apply to an open circuit oscillator at any given radio station, the energy of the radiated wave is largely confined to a single frequency and the effect at the receiving apparatus is termed in operators' language *"sharp tuning,"* meaning that very careful adjustment is required at the receiving station to place the receiving apparatus in resonance with the distant transmitter, i. e., the transmitting apparatus is said to be "sharply tuned." But with the conditions of Fig. 105 the transmitter is *"broadly tuned"* and the radiated wave said to have *"excessive damping."*

These trade expressions are more or less comparative because the damping of the receiver is not taken into account. However, the terms may be applied in a practical way. In any given transmitter, oscillations of great amplitude or strength but of feeble damping are really desired, but in certain types of apparatus the conditions favorable to one offset the conditions favorable to the other; hence we are required to effect a compromise.

The exact meaning of the logarithmic decrement of the oscillations in radio-telegraphy may be better understood by considering the oscillating movements of a pendulum in mechanics. Suppose for example a plumb bob is attached to the end of a string and suspended freely as in Fig. 105a; drawn to one side and released, the bob will vibrate to and fro until the oscillation is completely damped out. If a piece of cardboard, for instance, were attached to the string, the oscillations of the pendulum would come to a stop in a much shorter period, e. g., they would be said to be *highly damped.* This corresponds to the damping of the oscillations in a radio oscillation circuit having considerable resistance.

Now the time period of one complete oscillation of the pendulum can be obtained by counting the oscillations for one minute and dividing their number by 60. Hence if 60 com-

plete oscillations took place per minute, the time period of one oscillation would be one second. This could be easily arranged if the string of the pendulum had a certain length and the bob a certain weight.

Assume that the bob oscillated in front of a scale calibrated in inches as in Fig. 105a and that at the beginning of the first oscillation it was drawn from the zero position outward to a distance of 15 inches. On account of wind friction, at the end of one-half oscillation the bob would not have travelled 15 inches from the zero position. Under suitable conditions it would move outward, let us say, 14.2 inches and in the return swing, its movement would be still less, say 13.5 inches. That is, the swing of the second oscillation would be 1½ inches less than the initial oscillation.

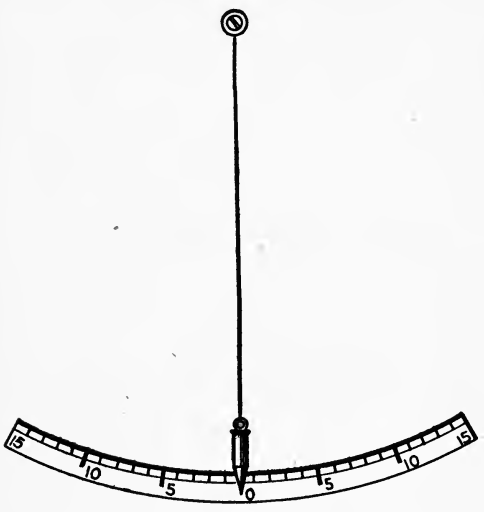

Fig. 105a—Pendulum for Illustrating Damping.

If we observe the length of the successive swings and plot the results as in Fig. 104, we would obtain a group of decaying oscillations which would bear the following ratio to one another. If the horizontal axis A, B is divided into seconds, and the amplitude of the right and left swings of the pendulum shown by the notations on the vertical axis, (0 to 15, in either direction) then the amplitude at the termination of a complete period or at any partial period of oscillation will be as follows: at the end of the first half period, the amplitude of the oscillation will be 14.2; at the end of a complete period, 13.5. After the pendulum has been in oscillation for 1½ seconds, the amplitude will be 12.8 and at the end of two seconds, 12.1 and so on.

It is to be especially noted that the ratio of the amplitude of the successive oscillations is constant, e. g., $15/13.5 = 1.11$; $13.5/12.1 = 1.11$, and so on. This ratio will be constant to the end of the swings of the pendulum because it is a law of all mechanical oscillating motions, that the oscillations will die away at such rates that the ratio of successive amplitudes remains constant. This is the condition assumed to exist in the spark discharge circuits of radio transmitters.

It should now be clear that if the friction to the oscillation of the pendulum were increased by attaching a cardboard damper to the pendulum, the swings would die out more rapidly and the ratio of the successive amplitudes would take a higher figure. The damping of the oscillations would thus be increased. We see from this that slow damping corresponds to a great number of swings of the pendulum whereas rapid damping corresponds to a small number of swings of the pendulum.

Now the ratio of the amplitude of two successive oscillations is called the *damping factor* and the *logarithm of this ratio* is called the *logarithmic decrement.* In the problem cited the ratio is 1.11 and if reference is made to any table of Naperian logarithms, the logarithm of 1.11 will be found to be approximately 0.10. Similarly if the ratio were 1.22, the logarithmic decrement would be 0.2, the limit allowed by law.

The decrement of the oscillations flowing in the aerial of a modern radio-transmitter is frequently .05 per complete cycle, hence for each spark there will be $\frac{4.605 + .05}{.05}$ or 92 complete oscillations.

It is now apparent that the feebler the decrement, the greater will be the number of oscillations per spark and provided their amplitude does not fall too much, the stronger will be the current induced in the receiving aerial per spark of the transmitter. This combined with the favorable tuning qualities of a feebly damped transmitter brings about very desirable conditions.

The damping of a circuit of a radio-frequency depends upon the effective capacity, inductance and resistance of that circuit. These quantities are related in the following manner:

$$\delta = 1.57 \times R^1 \times \sqrt{\frac{C}{L}}$$

Where R^1 = high frequency resistance in ohms,
C = capacity in farads,
L = inductance in henries,
δ = decrement per semi-oscillation.

The ratio of $\frac{C}{L}$ changes the values of R^1 but we may state generally that increase of L or decrease of C will reduce the damping of the oscillations, e. g., decrease the logarithmic decrement.

Assume a circuit of .01 microfarads capacity, inductance of 10,000 centimeters and resistance of 3 ohms, then

$$\delta = 1.57 \times 3 \times \sqrt{\frac{.00000001}{.00001}} = 0.148$$

Practical measurement of the logarithmic decrement will be described in Part XI.

94. Methods of Exciting Oscillations in an Aerial.—The antenna circuit can be set into oscillation in ordinary spark telegraphy in several different ways as follows:

(1) By direct excitation (plain aerial connection);
(2) By inductive coupling to a closed oscillation circuit;
(3) By conductive coupling to a closed oscillation circuit;
(4) By capacitive coupling to a closed oscillation circuit;

Direct excitation of the aerial has been shown in Fig. 97a, where the spark gap is connected directly in series with the antenna circuit. The winding S is the secondary of an induction coil wherein the pressure of the current is several thousand volts. This coil is generally fitted with a magnetic interrupter and energized by a 15 to 30 volt storage battery.

The advantage of this method of exciting oscillations in the aerial lies in the simplicity of the connections but there are several objections to its use. The principal objection is the fact that the oscillations are rapidly damped out and the waves radiated from the aerial will interfere with the reception of signals at other stations even when not tuned to the frequency of this transmitter. The second disadvantage is that the insulation of the aerial is subjected to an abnormal strain caused by the high voltage necessary and by the low frequency current of the induction coil being superposed on the radio-frequent oscillations.

The oscillations in the antenna circuit of the plain aerial transmitter will be damped out less rapidly if fair amounts of inductance are inserted at the base as at L, Fig. 97b. Under these conditions, the decrement of the oscillations may compare favorably with modern methods of excitation.

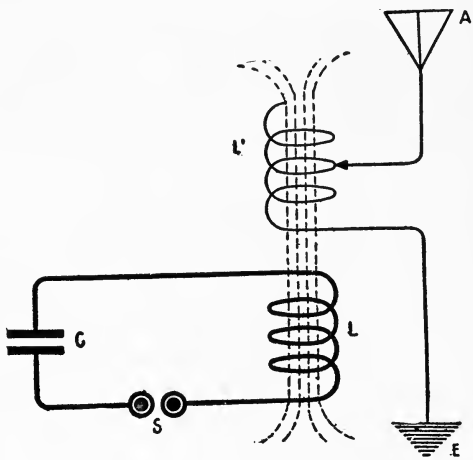

Fig. 106—Inductively Coupled Transmitter.

Indirect methods of antenna excitation are shown in Figures 106, 107 and 108. The principal advantage of these methods of coupling lies in the fact that the closed circuit condenser acts as a reservoir of energy and since the capacity of the condenser in the closed oscillation circuit is generally several times that of the capacity of the aerial, it permits the closed circuit to use large amounts of power for the same wave length, spark frequency and

voltage which results in the production of more powerful oscillation. Then by proper adjustment of coupling, these oscillations may be transferred to the antenna systems at a certain rate and radiated in the form of electro-magnetic waves.

Inductive coupling of the open and closed oscillation circuits is shown in the diagram, Fig. 106. The spark gap S is now placed in the closed oscillation circuit, the oscillations generated in the latter are transferred to the antenna through the oscillation transformer, L, L-1.

When the condenser discharges through L, the lines of force cut through L^1, setting up in the aerial circuit oscillations of similar frequency provided the aerial circuit is carefully tuned to the closed circuit. Winding L is seen to serve the double purpose of governing the frequency of the oscillations in the condenser circuit and transferring them by magnetic induction to the aerial circuit.

If L and L^1 are closely coupled, the oscillations in the aerial system will be damped out rapidly due to a part of the energy being retransferred back to the spark circuit, but if L and L^1 are loosely coupled (drawn apart) the oscillations in the aerial circuit will be damped out less rapidly. We see from this that the tuning qualities of the transmitter are largely controlled by the coupling of the oscillation transformer. It is usual to adjust the coupling to a degree that will give oscillations of fairly feeble damping provided the flow of the current in the antenna circuit is not seriously reduced thereby.

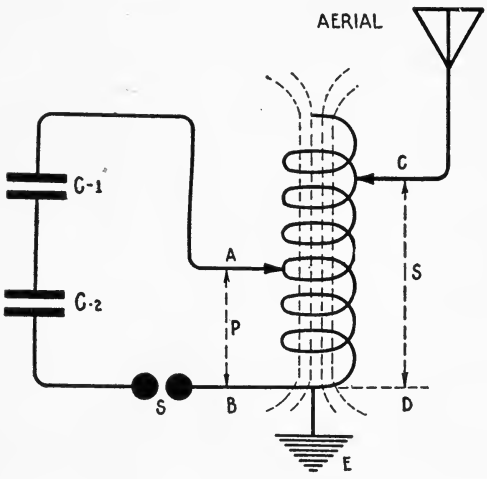

Fig. 107—Conductively Coupled Transmitter.

Conductive coupling of the closed and open oscillation circuits is shown in Fig. 107, where an auto transformer is employed to transfer the oscillations to the antenna. In this diagram the turns from A to B constitute the primary winding and the turns from C to D, the secondary winding. When condensers C-1, C-2, discharge through winding P, an alternating magnetic field threads through S, which follows the primary current. Oscillations of radio-frequency are thus induced in the secondary circuits. The advantage of this method of coupling lies in the simplicity afforded by the use of a single helix for transforming the oscillations. The inductively coupled system, on the other hand, requires a primary and secondary helix with the necessary mechanical arrangements for adjustment of the coupling. There is little difference in the degree of efficiency obtained by these two methods of coupling; but the coupling between the closed and open oscillation circuits can be more easily adjusted by the inductive transformer than by the conductive transformer. If the earth connection to the helix in Fig. 107 is fitted with a contact clip, the turns included from C to D can be placed at a distance from the turns in use between A and B and in this manner the coupling between the

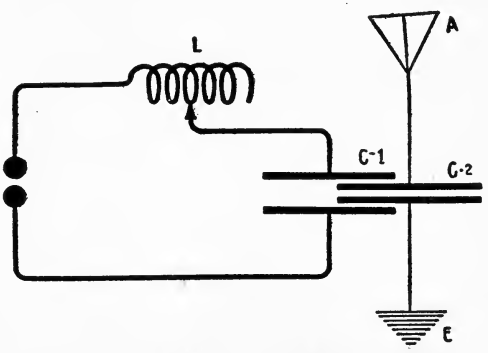

Fig. 108—One Method of Capacitive Coupling.

two circuits can be closely adjusted, but, of course, with greater difficulty than in the inductive system.

In the *capacitive coupling* shown in Fig. 108, a condenser C-2 is connected in series with the aerial system and is also placed between the plates of the condenser C-1, which is a part of the closed oscillation circuit. Part of the electrostatic field of C-1 is transferred to C-2 and accordingly oscillations will flow in the aerial circuit.*

The majority of radio stations employ the inductive method of coupling.

95. The Reaction of Coupled Circuits.—We might expect that when the open and closed oscillation circuits of a radio-telegraph transmitter are adjusted independently to a frequency corresponding to a wave length of 600 meters and afterwards the circuits are coupled for the transference of energy, the radiated wave would be of the same length but this may not be the case. Under certain conditions of coupling, oscillations of two frequencies occur in the antenna circuit.

For example, if the closed and open circuits are set for the wave of 600 meters, we may find (by means of a wavemeter) two waves being radiated from the aerial, one 630 meters in length and the other 570 meters in length, corresponding to two distinct frequencies of oscillation. These two frequencies are caused by the reaction of the magnetic field of the open circuit upon the closed circuit, and vice versa, that is, the oscillations flowing to and fro through the primary circuits induce currents in the secondary circuit and the magnetic field of the secondary currents tends to react and induce currents in the primary. This interchange of energy goes on until the current in the primary can no longer bridge the spark gap when the process stops. This interlinkage of the lines of force of the two windings causes the effective self-induction of the antenna coil either to increase or decrease according to which of the two circuits is driving the other, and results in the production of two sets of oscillations.

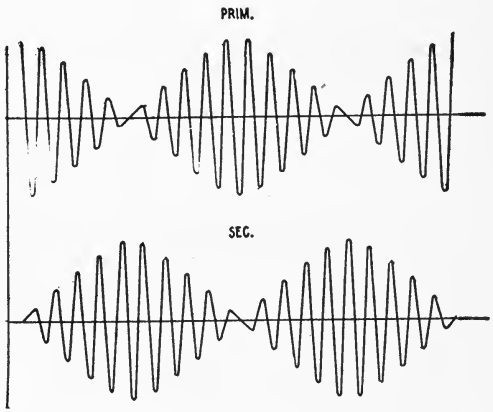

Fig. 109.—Showing Complex Oscillations in Improperly Adjusted Transmitter.

The resulting oscillations of coupled circuits may be shown by the diagram of Fig. 109, where two groups of oscillations in the closed and open circuits are represented. It will be noted that the oscillations in the closed circuit have maximum amplitude when those in the open circuit have minimum amplitude, and vice versa. In the sense of a second of time the two sets of oscillations take place simultaneously, but in the sense of a fraction of a second they do not reach their maximum amplitude simultaneously.

When the antenna oscillates at two distinct frequencies, two waves of different length are set into motion. This is an undesirable condition, (1) because the receiving apparatus generally can be tuned only to one of the radiated waves, the energy of the other being lost; (2) a needless amount of interference is caused thereby to the operation of other radio stations.

The true coefficient of coupling between two circuits of this character is determined by the following formula:

$$K = \frac{M}{\sqrt{L_1 L_2}}$$

where L_1 and L_2 = self-inductance of the primary and secondary circuits respectively,
M = coefficient of coupling.

It is the custom to determine the coupling from actual measurement of the radiated waves, or

*This is coupling by electrostatic induction. Direct or conductive electrostatic induction may also be used.

$$K = \frac{\lambda_2^2 - \lambda_1^2}{\lambda_2^2 + \lambda_1^2}$$

Where λ_2 = longer wave,
λ_1 = shorter wave.

Also if λ_3 equals the wave length to which the primary and secondary circuits are adjusted independently, then

$$\lambda_2 = \lambda_3 \sqrt{1 + K}$$
$$\lambda_1 = \lambda_3 \sqrt{1 - K}$$

In other words, if the value of the coupling K is known, the two wave lengths can be calculated before actual measurement.

When the primary winding of the oscillation transformer is placed close to the secondary winding, perhaps partially telescoped into it, the set is said to have *"tight coupling"* or *"close coupling,"* but when these two windings are drawn apart the coupling is said to be *"loose."*

Now if oscillations of two frequencies flow in an aerial system, and afterward the coupling is gradually reduced, the two sets of oscillations gradually merge into oscillations of a single frequency and generally with this adjustment, the radiated wave is feebly damped or of low decrement; *i. e.,* it has the damping of the antenna circuit.

The student should note this carefully: *With the plain spark discharger in the closed circuit, "close coupling" of the primary and secondary windings generally causes a "broad wave" to be radiated from the aerial system, while "loose coupling" results in the radiation of a "sharp wave." The terms are, of course, merely relative.* (See Appendix, Section G.)

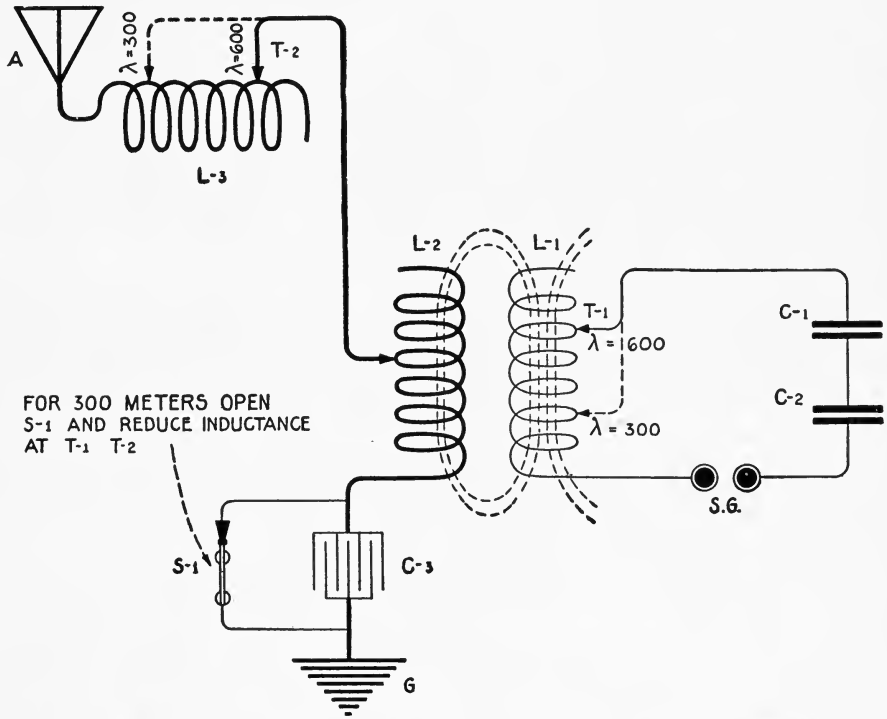

Fig. 110—Diagram Showing Changes Necessary to shift from 600 meter to 300 meter Wave.

96. **The Standard Waves of Commercial Wireless Telegraphy.**—The rules of the International Radio-Telegraphic Convention require the use of *two standard waves* for the dispatch of commercial wireless traffic, *namely* 300 *and* 600 *meters.* Either of these waves must be employed for calling another station but

after communication is established, waves of any length between 300 and 600 meters may be used. The rules also specify that by special license vessels may employ waves in excess of 1600 meters.

For ordinary marine traffic, naval stations of the United States employ waves varying in length from 600 to 1600 meters. High power naval and commercial stations use waves varying from 1600 meters to 10,000 meters. The United States regulations limit amateur stations to the use of a 200 meter wave with power input of 1 K. W. If the amateur station is located within five miles of a naval station their sets are limited to an input of ½ K. W.

The standard marine radio sets of the Marconi Wireless Telegraph Company of America vary in power from ¼ K. W. to 2 K. W. and are designed for three waves of 300, 450 and 600 meters length.

The average ship's aerial in the Marconi service has a fundamental wave length of 325 meters, capacity of approximately .001 microfarads and inductance of 70,000 centimeters. In order that the standard waves of 300 and 600 meters may be radiated, an extra inductance must be included at the base for the 600 meter wave and a condenser must be connected in series for the 300 meter wave. This coil and condenser are called: (1) *the aerial tuning inductance;* (2) *the short wave condenser.* The aerial tuning inductance varies from 20,000 to 80,000 centimeters inductance and the short wave condenser usually is of fixed capacity, approximately .0005 microfarads. The position occupied by these devices in the antenna circuit is shown in Fig. 110. The condenser is shunted by a switch S-1 which is closed for the 600 meter wave. The tuning inductance L-3 is fitted with a plug contact permitting one turn or a fraction of a turn to be inserted in the circuit at A^1.

The method of shifting from one standard wave to the other in a commercial set is shown in Fig. 110. Assume the open and closed circuits to be set for the 600 meter wave: Then if the circuits are to be adjusted for 300 meters, the following procedure is involved:

(1) The variable contact T-1 at the primary winding of the oscillation transformer is set at a lesser value of inductance (as indicated by the dotted lines);
(2) Similarly the variable contact of the aerial tuning inductance L-3;
(3) The switch S-1 shunting the short wave condenser is opened.

If the condenser of the closed circuit exceeds .015 microfarads capacity, its capacity must be reduced for the 300 meter wave, to say, .006 microfarads.

When a condenser is connected in series with an open circuit oscillator, the total capacity is affected just as it is when two ordinary condensers are connected in series, i. e., the capacity is reduced and the resulting value will be less than the capacity of the smallest condenser in the circuit. We have already shown that the wave length of an open circuit oscillator $= 38 \sqrt{LC}$; hence a decrease of the value of C will decrease the length of the radiated wave.

The equation for the wave length of the open or antenna circuit then becomes:

$$\lambda = \frac{59.6}{K} \sqrt{LC}$$

Where K = a correction factor the ratio of the capacity of the short wave condenser to that of the aerial or $\frac{C_2}{C_1}$

The table for this ratio—value of K—appears in Section C of the appendix. This section also includes the values of K for the ratio of $\frac{L_1}{L_2}$

Where L_1 = the distributed inductance of the aerial;
and L_2 = the inductance of the loading coil at the base. (See Par. 92).

If very large values of concentrated inductance are inserted at the base of the aerial, the correction factor may for all practical purposes be ignored.

97. Fundamental Circuit of a Complete Radio Transmitter.—We have shown how alternating current can be obtained from a generator and how it can be raised to a pressure of several thousand volts by a step-up transformer. It has been explained that this current of high pressure can be stored up temporarily

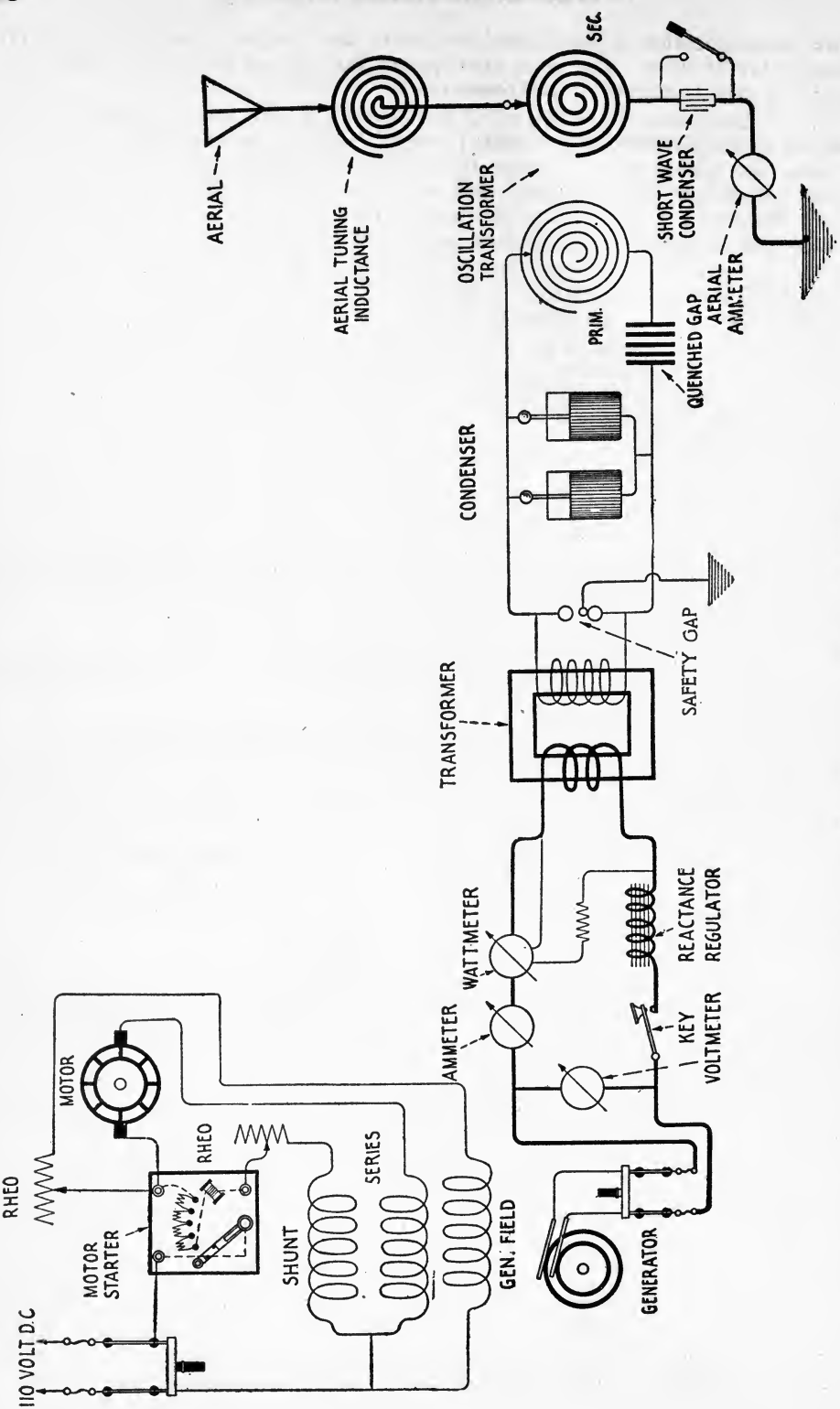

Fig 111—Fundamental Circuit of Modern Transmitter.

in a condenser and discharged through the closed circuit in the form of radio-frequent oscillations, and that these oscillations can be transferred to an aerial circuit, where a part of their energy is radiated in the form of an electromagnetic wave. We see, then, that the principal parts of a radio-transmitter are:

(1) The alternating current generator;
(2) The alternating current step-up transformer;
(3) The condenser;
(4) The oscillation transformer;
(5) The aerial or antenna;
(6) The short wave condenser;
(7) The aerial tuning inductance;
(8) The transmitting key.
(9) The spark gap.

The student should now focus his attention on the diagram of Fig. 111 where direct current enters the motor at the left of the drawing but eventually at the extreme right, an alternating current of radio-frequency flows in the antenna circuit.

A complete transmitting set consists of the following apparatus:

(1) A motor generator to convert direct current to alternating current.
(2) A starting box to regulate the flow of current through the motor armature during the starting period.
(3) Field rheostats to regulate the frequency and the voltage of the generator.
(4) A step-up transformer to raise the voltage of the alternating current to a value in excess of 10,000 volts.
(5) An ammeter to measure the current flowing through the transformer.
(6) A voltmeter to measure the voltage at the terminals of the alternator.
(7) A wattmeter to measure the power input to the transformer.
(8) A reactance regulator to regulate the flow of current through the primary winding of the transformer.
(9) A telegraph key to permit the current to be interrupted in the form of the dots and dashes of the Morse code.
(10) A battery of condensers for the production of radio-frequent oscillations.
(11) A spark discharge gap to discharge the energy stored up in the condenser.
(12) An oscillation transformer to transfer current at radio frequencies from the condenser circuit to the aerial circuit.
(13) An aerial ammeter to determine conditions of resonance between the condenser circuit and the aerial circuit.
(14) A short wave condenser to decrease the time period of oscillation of the antenna circuit.
(15) An aerial tuning inductance to increase the time period of oscillation of the antenna circuit.
(16) An aerial change-over switch to shift the aerial alternately from the transmitting apparatus to the receiving apparatus.
(17) An aerial to radiate energy in the form of electromagnetic waves.

98. Simple Explanation of the Circuits.—A simple explanation of the functioning of this apparatus follows: *Direct current,* at pressure of 110 volts, *enters* the *motor armature* through the *starting box* and sets it into rotation. The *alternator* in turn *generates alternating current* at pressures varying from 110 to 500 volts according to the design of the machine.

When the *telegraph key* is *closed,* current *flows* from the *generator armature* through the *primary winding of the transformer* setting up magnetic lines of force which intersect or cut through the *secondary winding* inducing therein a current at pressures varying from 10,000 volts to 25,000 volts.

Now the voltage and the frequency of the alternating current can be adjusted by the *generator field rheostat* and the *motor field rheostat.* For example, if resistance be added at the motor field rheostat, the motor will increase its speed and, accordingly, the frequency of the generator will be increased. This will also tend to increase the voltage of the generator. If resistance be added at the generator

field rheostat, the voltage of the generator armature will be reduced and conversely if the resistance of this rheostat is decreased, the voltage of the generator will increase.

The terminals of the *secondary winding* of the high voltage transformer are connected to the terminals of a *battery of condensers* where the energy is stored up temporarily in the form of *electrostatic* lines of force. When the limit of charge for each alternation of charging current has been reached, the condenser will *discharge across the spark gap through the primary winding* of the oscillation transformer, the discharge consisting of a number of *radio-frequent oscillations.* The frequency of the oscillations will decrease if *inductance is added* at the *primary winding* or increase if the inductance be reduced. An increase or decrease of the capacity of the condenser affects the frequency in the same manner, e. g., *a reduction of capacity will increase the frequency of the oscillations while an increase of capacity will reduce the frequency of the oscillations.*

The *oscillations* flowing *in the closed circuit* are *transferred* to the *aerial circuit* through the oscillation transformer and a portion of the energy is *radiated from the antenna* in the form of *electromagnetic waves.* In a simple single wire aerial system, the wave length of this wave motion will be approximately 4.3 times the length of the oscillator. The length of the radiated wave in fact varies inversely as the frequency of the oscillation. The higher frequencies such as 500,000 and 1,000,000 cycles per second correspond to the shorter waves 600 meters and 300 meters respectively, while lower frequencies of oscillation from 30,000 to 100,000, for example, correspond to the longer waves from 10,000 meters down to 3,000 meters.

If a *receiving aerial* be erected at a *distant station* and its natural time period of oscillation adjusted to the frequency of the oscillations flowing in the transmitter aerial, feeble currents will be induced in it which by appropriate devices may be heard in the *receiving telephone.* More clearly, the fluxes of the advancing wave will induce currents in the receiving aerial having substantially the frequency of the oscillations in the transmitting aerial. By appropriate devices within the station, these currents can be translated into the language of the sender.

99. Numerical Values for a Standard Radio Set.—In order to familiarize students with the power consumption, the capacity and inductance of the various elements in a Marconi transmitting set, the following data is presented. The motor of the 2 K. W. 500 cycle panel transmitting set takes 4.3 H. P., the generator delivers 2 K. W. Current enters the motor armature at 110 volts D. C., but the voltage developed at the generator armature is approximately 380 volts on open circuit and approximately 120 volts when the transmitting key is depressed. The frequency of the generator is 500 cycles (this frequency is now standard).

The transformer is of the closed core type; the secondary potential is 14,500 volts. The capacity of the condenser for the 450 and 600 meter waves is .012 microfarads, but for the 300 meter wave it is reduced to .006 microfarads.

The primary winding of the oscillation transformer has maximum inductance of approximately 10,000 centimeters correspondingly lesser values being used for the shorter waves. The secondary winding has approximately 30,000 centimeters while the two aerial tuning inductance coils have combined inductance of about 80,000 centimeters. The aerial ammeter has range 0-25 amperes, the wattmeter, 0-3 kilowatts.

For the standard ½ K. W. set the motor is rated at 1 H. P., the generator at ½ K. W. The voltage at the transformer is about 15,000 volts and the capacity of the closed circuit condenser .004 microfarads. The inductance of the primary at the wave of 600 meters is approximately 25,000 centimeters. Lesser values are, of course, employed for the 300 and 450 meter waves. The secondary inductance would, of course, be the same as with the 2 K. W. set.

PART VII.

APPLIANCES FOR A RADIO TRANSMITTER

SPARK DISCHARGERS — OSCILLATION TRANSFORMERS — CONDENSERS—TRANSFORMERS.

100. In General. 101. Spark Dischargers for Radio Telegraphy. 102. Adjustment of the Spark Note. 103. Oscillation Transformers. 104. Aerial Tuning Inductance. 105. The Short Wave Condenser. 106. High Potential Condensers. 107. High Frequency "Choking" Coils. 108. High Voltage Transformers. 109. Reactance Regulators. 110. Aerial Changeover Switch. 111. Transmitting Keys.

100. In General.—Although the apparatus of the radio transmitter has been described and discussed in a fundamental way, certain important parts of the complete set will require more detailed treatment. Principal among these are the *various types of spark gaps, condensers, oscillation transformers, signalling keys, etc., each of which may take one of several designs or may differ in their mode of functioning.*

101. Spark Dischargers for Radio-Telegraphy.—The functions of the spark *gap in a radio-transmitter are:* (1) *to keep the closed oscillation circuit idle until the condenser is fully charged;* (2) *to discharge the energy stored up in the condenser in the form of radio-frequent oscillations;* (3) *to quench the spark, i. e., to restore the gap to its non-conducting state, when the energy has once been transferred to the antenna.*

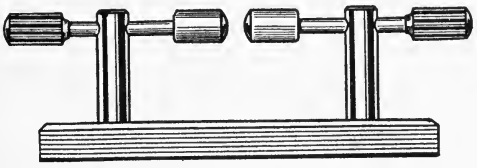

Fig. 112—Simple Spark Discharger.

The ideal gap would be one of infinite resistance during the charging period of the condenser but of zero resistance during discharge—a condition partially realized in the rotary gap but not completely fulfilled.

The transmitting sets of the Marconi Company employ four general types of spark dischargers as listed below:

(1) Plain spark discharger;
(2) Non-synchronous rotary discharger;
(3) Synchronous rotary discharger;
(4) Quenched spark or multiple plate discharger.

(a) In its most common form the *plain spark discharger* is composed of two brass, zinc, or copper rods about ¼ or ⅜ inch in diameter slightly rounded at the discharge tips and mounted on an insulated base as in Fig. 112, appropriate means being supplied whereby the length of the gap may be carefully and closely regulated. By careful adjustment of the condenser capacity, the voltage of the generator, and the length of the gap, a single spark discharge for each alternation of the charging current can frequently be obtained, but it is somewhat difficult to

maintain this state of adjustment; in fact, in the majority of cases, multiple discharges are found.

The chief difficulty with the plain gap is the tendency to form an arc with consequent impurity of the oscillation. Various methods have been devised to prevent the gap arcing such as the use of several gaps in series, or the applying of an air blast either at right angles to the discharger or through hollow electrodes to the center of the spark discharge. The latter method is particularly successful for not only is arcing prevented but a very clear spark note is obtained as well. Gaps of this construction are generally used in transmitting sets employing 60 cycle current transformers or induction coils as a source of high voltage current. (See Section G, Appendix.)

(b) The *non-synchronous rotary spark discharger* generally consists of a circular disc of metal or some insulating material fitted with 8 or 10 metal sparking points equally spaced about the circumference, the disc being mounted on the shaft of a direct current motor with a speed controlling rheostat connected in series. The disc revolves between two stationary spark electrodes which can be carefully regulated in respect to the revolving electrodes. When the two stationary electrodes are connected in series with the closed oscillation circuit of a transmitter, the spark will discharge *whenever an electrode of the disc comes opposite the stationary electrodes and the pitch of the note will vary as the speed of the motor.*

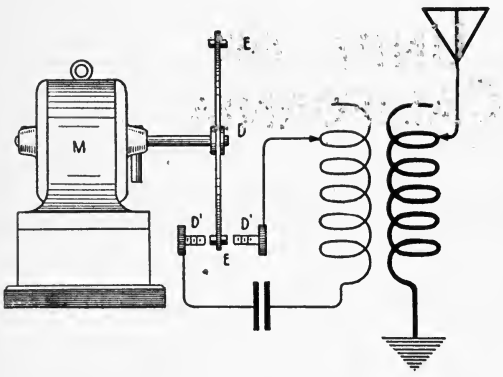

Fig. 113—Non-synchronous Rotary Discharger.

The non-synchronous rotary discharger is usually fitted to 60 cycle alternating current transmitting sets, to produce a spark discharge of musical pitch, but it may be employed with alternating current transmitters of any frequency as well.

The construction of the *non-synchronous gap* is shown in the drawing, Fig. 113, where an insulated disc D is mounted on the shaft of the motor M. Equally spaced about the periphery are the spark electrodes, E, E, which extend through the disc. Two stationary electrodes, D^1, D^1, are mounted on a base and are connected to the condenser and inductance as shown. At the moment one of the electrodes on the disc comes between the stationary electrodes, the spark will discharge and owing to the equal spacing of the spark points, the spark note partakes of a musical pitch. Experiments with this gap indicate that the most effective results are obtained (with 60 cycle current) when the disc is driven at a speed that will give from 200 to 300 spark discharges per second. The discs are fitted with the correct number of spark electrodes to give a spark of this frequency when driven by a motor at speeds varying from 1,800 to 2,400 revolutions per minute.

A modified type of the non-synchronous gap is shown in Fig. 114 where ten stationary sparking points are mounted on two brass sectors. A light contact arm, A, B, carrying two spark discharge points is attached to the shaft of a high speed motor. The advantage of this design is

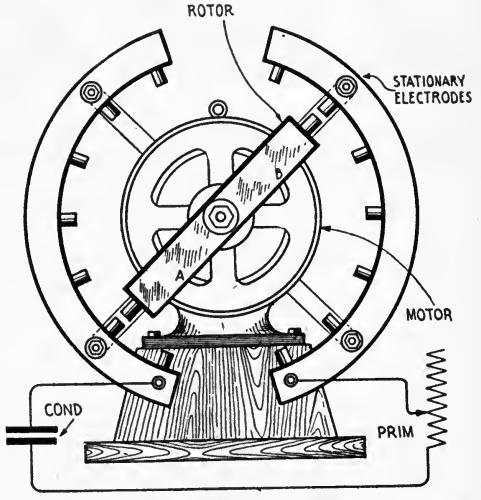

Fig. 114—Another Type of Non-synchronous Discharger.

that the spark discharge shifts rapidly from one set of stationary electrodes to the other thereby preventing the discharge points from overheating. Other modified types of this discharger are in use but they operate on the same fundamental principle.

The principal advantage of the *non-synchronous discharger* is that it produces a musical spark tone from a source of low frequency alternating current. As will be seen from the diagram of Fig. 115, although the condenser is discharged at a uniform rate, successive discharges are not of constant amplitude. In Fig. 115 the successive maximum amplitudes of the charging current are indicated at points a, b, c, d, e, f, g, etc., and the instant during the cycle at which the spark discharges by the mark X. It is easily seen that the spark frequency is very much greater than the frequency of the charging current, but the successive spark discharges are not of constant power; but since they are timed uniformly, a semi-musical note composed of fundamental tones coupled with a number of overtones is produced, having a pitch far more pleasing to the ear than that obtained by the plain discharger. By very careful adjustment of the speed of the rotor, a non-synchronous gap can be made to discharge the condenser at points of equal amplitude during successive alternations of the charging current. This results in a more uniform spark note than that obtained by ordinary adjustments.

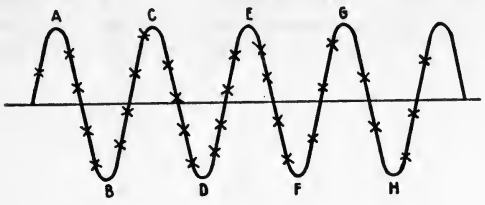

Fig. 115—Showing how the Spark Discharge is Superposed on Charging Current.

(c) For several well defined reasons the *synchronous rotary spark discharger* has found almost universal favor. Contrary to the non-synchronous type, the disc is mounted on the shaft of the alternating current generator to permit the discharge of the condenser to be accurately timed with the alternations of the charging current.

The disc of the synchronous discharger may be either of metal or of some insulating material that will withstand the peripheral strain but for mechanical reasons, the metal disc is preferred. This is firmly keyed to the generator shaft but not necessarily insulated* therefrom. The disc always will have discharge electrodes of the same number as the field poles of the generator, and if the stationary electrodes are arranged so that they can be shifted through a small arc, then by careful adjustment a high pitched "screeching" spark note will be secured. A note of this characteristic is particularly desirable for copying signals through the interference of static discharges at the receiver; particularly if the frequency of the charging current is 500 cycles per second.

In event that the frequency of the charging current is 500 cycles, the condenser will be charged and discharged 1,000 times per second, and the resultant spark note will have a musical pitch corresponding thereto.

The construction of the disc discharger supplied with the 2 K. W. 500 cycle sets of the Marconi Company is shown in Fig. 116, where a heavy steel disc carrying 30 copper spark electrodes is firmly keyed to the motor generator shaft. The disc is enclosed in a steel muffling drum which also acts as a support for the two stationary electrodes A, B, which are thoroughly insulated therefrom. In addition, this drum is designed so that it can be shifted through an arc of approximately 25° by the adjusting rod R. This adjustment permits the most favorable sparking point to be located and results in *synchronous discharges,* giving a clear, musical spark note.

Not only must the correct position of the stationary electrodes be found for successful working, but they must be adjusted to give the shortest possible discharge gap without the electrodes actually touching. In the Marconi gap, the stationary electrodes can be lowered .003 of an inch at a time, and the electrodes locked in position to prevent actual contact with the revolving disc.

The muffling drum is thoroughly ventilated by a set of air scuppers cast on the disc which supply a uniform blast of air for cooling the quenched gap of the Marconi panel sets as well.

*The disc of the rotary gap, in the 2 K. W. 500 cycle set of the Marconi Company is connected to earth.

The necessity for mounting the disc discharger on the shaft of the alternator will be at once apparent for if the disc were mounted on an independent motor, any variation in the line voltage would cause the "coming together of the electrodes" and the alternations of the charging current to fall out of step, but when the disc is mounted on the shaft any reduction of the frequency of the charging current will be immediately compensated for by the simultaneous reduction of the speed of the disc.

In the diagram of Fig. 116, the moving electrodes (mounted on the disc) are shown at 1, 2, 3, 4, etc. The spark, for example, passes from stationary electrode A to an electrode on the disc, through the disc and out at electrode B. The effective length of the rotary discharge gap is much greater than the actual distance between the stationary and revolving electrodes would indicate; actually the spark discharge begins long before the electrodes

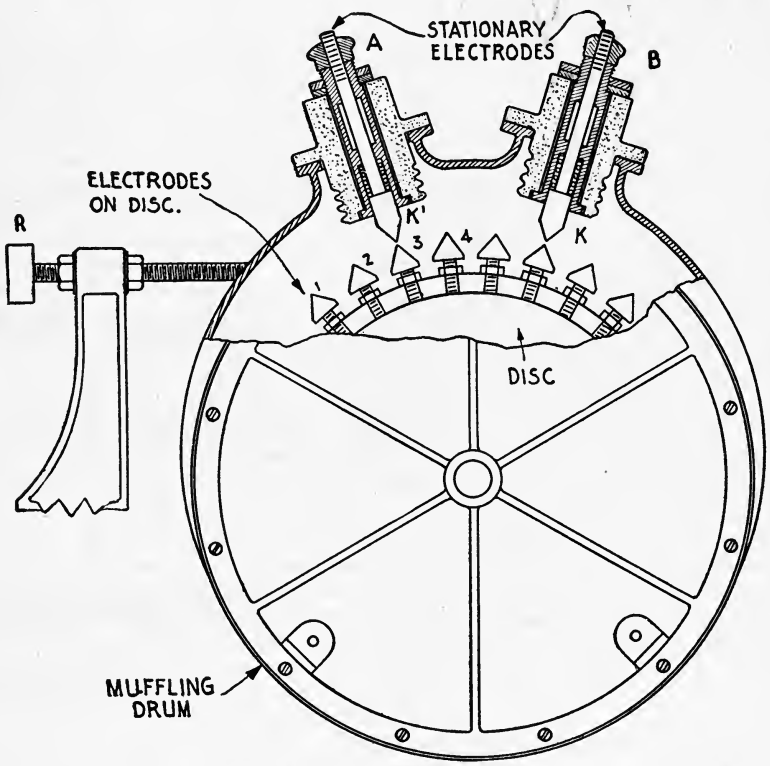

Fig. 116—2 K. W. Synchronous Disc Discharger of the American Marconi Company.

are directly opposite. Hence for favorable working the minimum distance between the electrodes should be about .005 inch. This will give a clear spark discharge and will not subject the condenser to abnormal strain.

One great advantage of the synchronous discharger is that it permits the handling of very large powers. In fact, the Marconi Company have constructed and successfully operated such dischargers at 500 K. W. with marked results.

An additional advantage of this gap is that it prevents the oscillations in the aerial circuit being retransferred to the closed circuit resulting in more efficient radiation; in other words the quenching is reliable.

The one-half kilowatt sets of the American Marconi Company are fitted with

synchronous dischargers which are practically a duplicate of the larger size gaps such as furnished with the 2 K. W. sets.

(d) The construction of the *quenched spark discharger* is shown in Fig. 117 where a number of heavy copper plates separated by fiber insulating washers micanite, or other insulating material, are placed in an iron rack and compressed by means of a pressure bolt. The thickness of the washers is chosen so that the space between the sparking surfaces of a single set of plates does not exceed .01 inch.

A groove is cut in each plate over which the inside edge of the washer rests. This prevents the spark discharging at the very edge of the washer which would

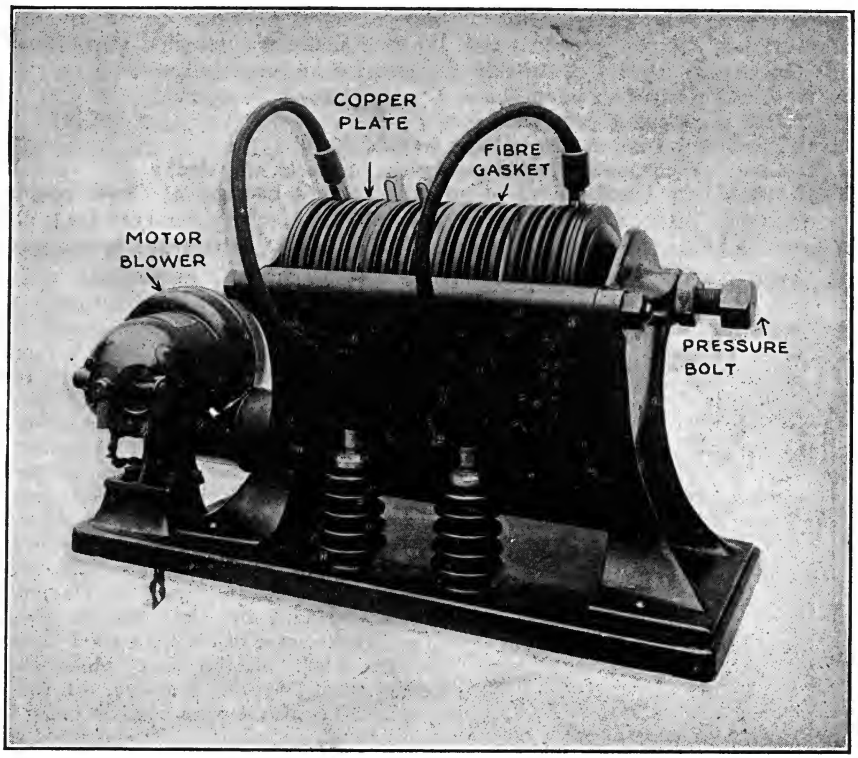

Fig. 117—Modern Quenched Spark Discharger with Motor Blower.

soon cause a short circuit. The insulating washers are specially treated so that the discharge surface is airtight. This not only aids in quenching out the primary oscillations, but gives a noiseless discharge as well.

It will be noted from the photograph, that the gap is cooled by a small motor-driven blower mounted on the base which forces a draught of air through the base of the rack against the cooling flanges of the plates.

Since the quenched discharger had been found to be effective with comparatively low voltages, the potential of the transformer secondary rarely exceeds 15,000 volts, pressures as low as 6,000 volts being frequently employed. Approximately 1,200 volts are required for each gap and the number that will be used in any case depends upon the voltage of the transformer.

The great advantage of the quenched gap lies in its ability to prevent the energy of the oscillations induced in the aerial circuit being retransferred to the condenser circuit, even when the oscillation transformer is closely coupled. Therefore the antenna oscillates

at single fundamental frequency and will radiate a single wave. The ideal spark gap is one which permits the closed circuit to oscillate for a period of just sufficient length to build up the oscillations in the aerial circuit to their maximum amplitude. Then the oscillations in the condenser circuit should cease permitting the antenna to continue in oscillation until its energy is dissipated.

If the coupling between the open and closed circuits is sufficiently loose, quenching of the primary oscillations will be obtained with practically any type of gap but the advantage of this particular type lies in the fact that quenching is secured with very close coupling, which gives increased values of antenna current. The precise action taking place in a transmitter employing a quenching gap can be shown as in Fig. 118 where a group of oscillations in the open and closed circuits of a transmitter appear. It will be seen that the closed circuit oscillates for a very brief period, or until the oscillations in the aerial circuit reach their maximum amplitude after which the oscillations in the closed circuit will be "quenched" out.

Summarizing the foregoing, it will be seen that the quenched gap offers several advantages, if used in properly designed and tuned circuits:

(1) It is noiseless in operation;
(2) Has no moving parts;
(3) Permits the use of low voltage transformers;
(4) Gives synchronous discharges (when properly adjusted);
(5) Gives very large values of antenna current because of closer coupling.

The quenched discharger has not been found satisfactory for very high powers and in such installations some form of the Marconi disc discharger is employed.

102. Adjustment of the Spark Note.—It is highly important that the spark gap of any radio transmitter be adjusted to give a uniform discharge, having, if possible, a musical pitch. A uniform spark discharge not only permits the signals to be more easily deciphered at the receiving station through atmospheric or static discharges, but also permits better formation of the characters of the telegraph code on the part of the sending operator. In addition, *the pitch of the note has a marked effect on the response of the receiver telephone diaphragm,* there being a critical spark frequency for maximum response with different types of telephones.

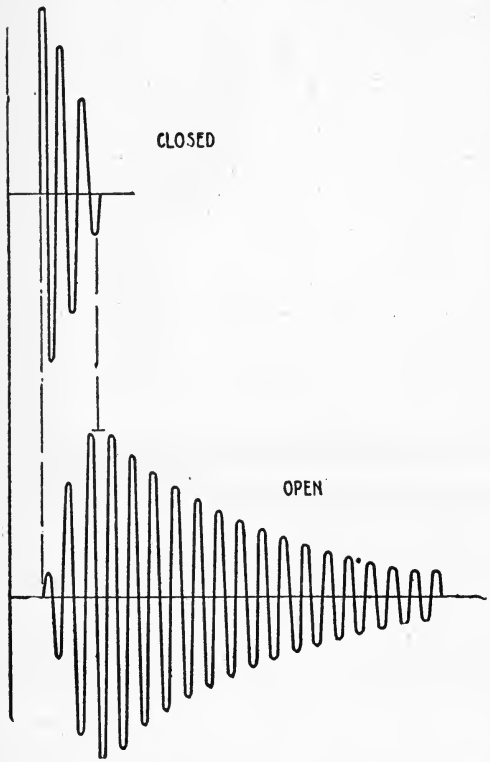

Fig. 118—Showing the Oscillations in Closed and Open Circuits of a Properly Adjusted Transmitter.

In the case of the *plain spark discharger,* the pitch of the note while governed primarily by the frequency of the alternator, is also dependent upon other factors such as,

(1) The length of the gap;
(2) The voltage of the generator;
(3) The capacity of the condenser;
(4) The design of the spark electrodes;
(5) The nature of the surrounding medium whether gas or air.

Now the capacity of the condenser in the usual radio set is a fixed quantity, hence, the correct note for this gap is found by increasing or decreasing the length of the discharge gap or by adjustment of the transformer voltage.

Blunt discharge electrodes give an irregular spark note whereas sharp pointed electrodes give a high pitched note, but they generally diminish the amplitude of the oscillation. A compromise between all these conditions is usually effected.

The correct spark tone for the rotary gap is obtained by adjusting the position of the

stationary electrodes until synchronous discharges are obtained, and also by regulating the length of the gap and the voltage of the transformer.

The note of the quenched gap is adjusted by variation of the number of gaps or by regulation of the generator voltage. By proper adjustment, synchronous discharges are readily obtained as will be evidenced by the uniformity of the note. (See Appendix, Section G.)

103. Oscillation Transformers.—The functions performed by the oscillation transformer of a radio-transmitter may be summed up as follows:

(1) Transfers energy from the closed circuit to the open circuit;
(2) Permits the wave length of either circuit to be increased or decreased (by variation of the self inductance of either coil);
(3) Permits some adjustment of the damping of the oscillations flowing in the aerial system.

The degree of coupling between the primary and secondary circuits of an oscillation transformer can be altered in three ways:

(1) By drawing the windings apart mechanically;
(2) By variation of the self inductance of either winding;
(3) By turning one winding at a right angle to the other.

All three methods are in use. The oscillation transformer used in the 2 K. W. 240 cycle sets and the 60 cycle sets of the Marconi Company is shown in Fig. 119. The primary winding has eight turns of copper tubing approximately 15 inches in diameter, spaced 1 inch apart, the tubing being about ⅜ inch in diameter. The adjacent turns of the primary winding are well insulated by means of specially designed porcelain insulators. The secondary is made up of heavy stranded insulated copper cable wound on a hard rubber spool. Since the inductance of the secondary is fixed, variation of the frequency of the oscillations is secured by adjustment of the aerial tuning inductance. The secondary winding is mounted so that it can be turned at a complete right

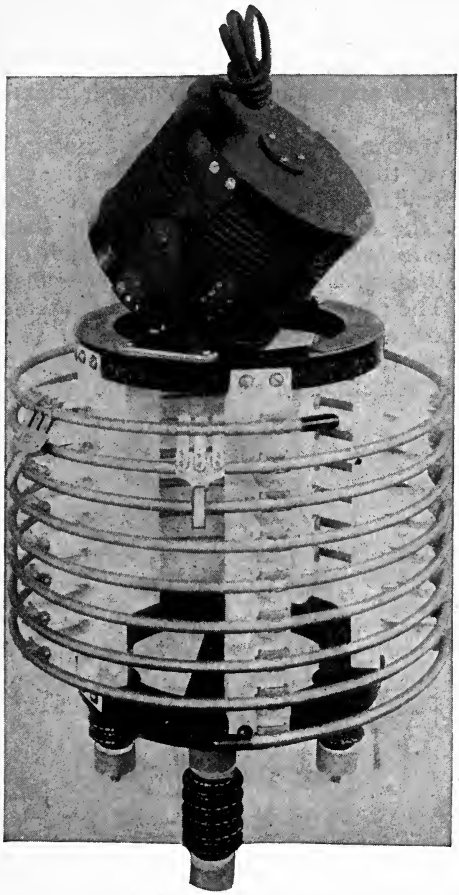

Fig. 119—Type A Oscillation Transformer of the American Marconi Company.

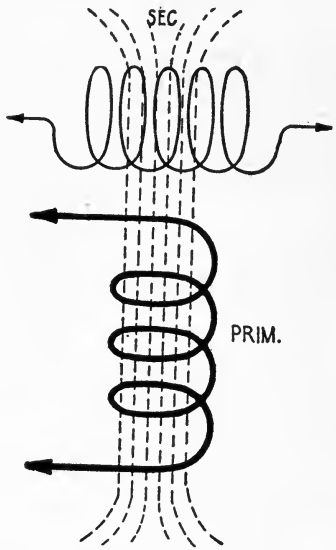

Fig. 120—Showing the Effect of Turning Secondary at Right Angles to Primary.

angle to the primary or at any required intermediate position, which permits close regulation of the transformer coupling. The effect of tilting the secondary at a right angle to the primary is shown in Fig. 120 where the coupling is practically zero. It will be seen that the lines of force of the primary are parallel with the

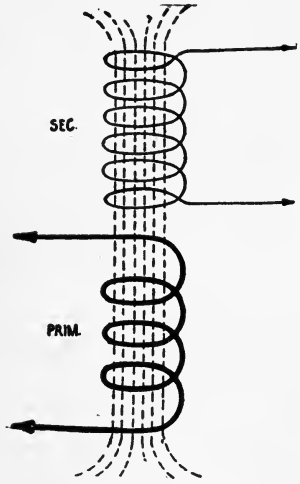

Fig. 121—Showing Position of Maximum Coupling of Type A Oscillation Transformer.

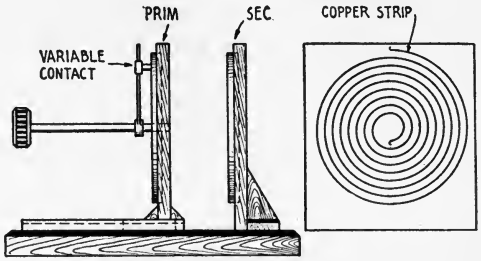

Fig. 122—Pancake Type Oscillation Transformer.

turns of the secondary and therefore no induction takes place in the secondary but in the position, Fig. 121, the lines of force cut the secondary turns at a right angle and the coupling is maximum.

In all transmitting sets it is advantageous to have the inductance of the primary or the secondary winding *continuously variable,* i. e., the construction must be such that the *entire inductance can be gone over inch by inch with a sliding contact.* An oscillation transformer of this type is shown in Fig. 122. The primary and secondary windings consist of a spiral of copper ribbon placed edgewise on an insulating disc. The handle is fitted with a sliding contact which permits any amount of inductance to be inserted in the circuit, inch by inch. The same handle that varies the inductance is used to draw the primary and the secondary windings apart, thus varying the coupling.

In a certain foreign radio system, an inductance element known as a variometer inductance is employed to change the degree of coupling between the closed and open circuits of radio-frequency. Briefly, it consists of the windings A and B, Fig. 123, comprising two coils which can be magnetically opposed to each other. The coils are connected in series and when directly opposite the inductance is at a minimum value, but when B is drawn away from A the inductance gradually increases, maximum inductance being obtained when they are drawn completely apart.

If the variometer is connected in the aerial system as in Fig. 124, and its self-inductance gradually increased, the mutual induction between the open and closed circuits will be increased and therefore the coupling.

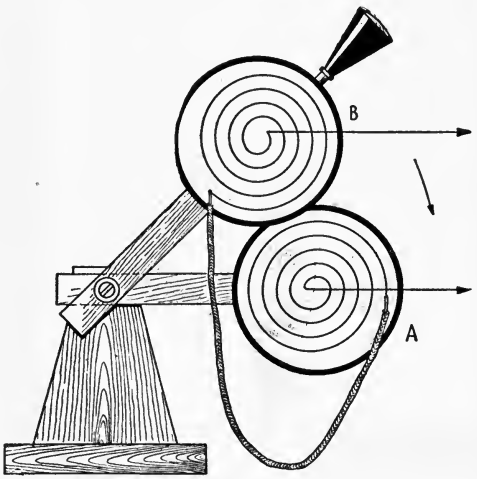

Fig. 123—Showing Fundamental Principle of the Variometer.

To be efficient and to have a minimum resistance, variometers must be wound with stranded copper cable made of a great number of small strands each of which is insulated from neighboring ones. A stranded cable made in this way is called "Litzendraht" which

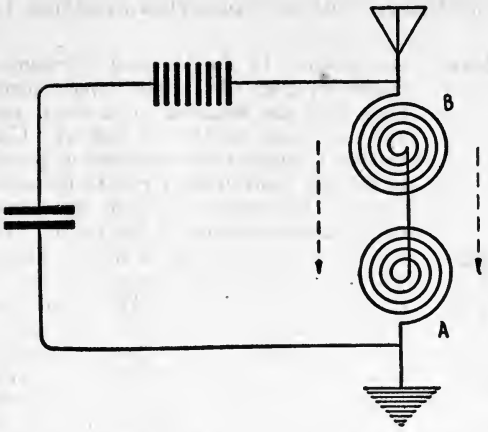

Fig. 124—Showing How Coupling is Changed by Variometer.

affords a conductor of maximum conductivity for high frequency currents.

Oscillation transformers may have fixed values of inductance for both the primary and secondary windings as in Fig. 125. In one type, the primary has a single turn of copper cable wound around 6 or 8 turns of smaller cable, constituting the secondary winding. The coupling is rather loose—about 8 per cent. for the average aerial. The necessary changes of wave length are obtained by variation of the capacity of the condenser in the closed circuit and the inductance of the aerial circuit.

104. Aerial Tuning Inductance.—The aerial inductance coil may be of the continuously variable type having a sliding contact which bears on an edgewise copper strip as in Fig. 126, or of the round barrel type made of stranded copper cable

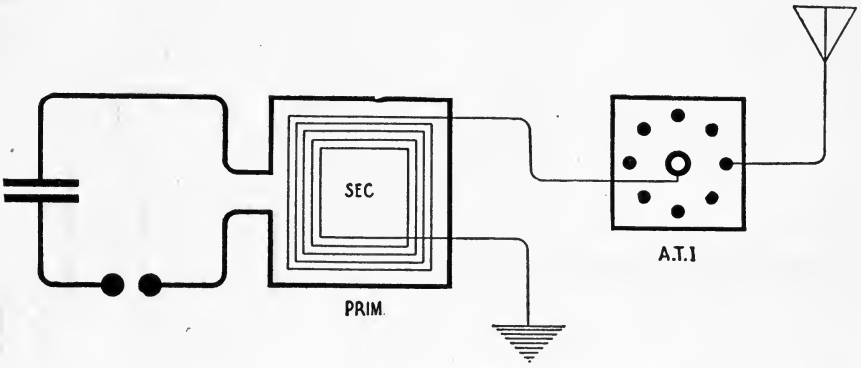

Fig. 125—Square Coil Type Oscillation Transformer.

as in Fig. 127. The inductance of the latter type is altered by means of a plug contact. It is, of course, essential that adjacent turns be well insulated from one another and separated so that there will be no sparking between them. Also the coil must be mounted on an insulated base or on specially devised insulators to prevent the high voltage current leaking to nearby conductors, or conducting material.

105. The Short Wave Condenser.—One form of this condenser as constructed by the Marconi Company, has four glass plates 15 by 15 inches covered with tinfoil 12 by 12 inches. Each plate has a

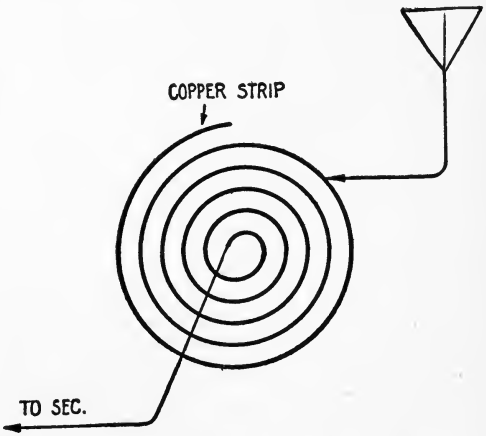

Fig. 126—Continuously Variable Aerial Tuning Inductance.

capacity of approximately .002 mfds. and since four are connected in series, the resulting value is .0005 mfds.

A very recent type of short wave condenser manufactured by the Marconi Company is shown in Fig. 128. Four copper plated glass jars are mounted on a metal rack and connected together as follows: Connection is made from the binding post E of the left hand inside jar A to the aerial system. The outer coating of jar A rests on the inside coating of the jar B. The outside coating of jar B makes contact with the outside coating of the jar D through the metal rack. The circuit continues on from that point in just the reverse direction, to that cited in the first case, finally ending at the binding post of jar C. The four jars are thus connected in series and have combined capacity of .0005 mfds. The short wave condenser may be connected in series with either the aerial wires or the earth lead.

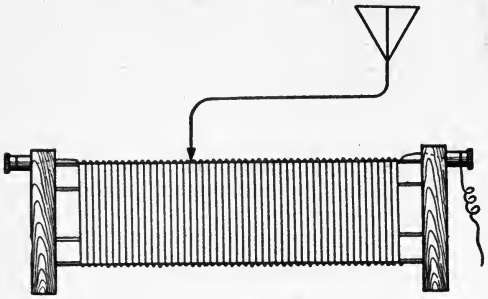

Fig. 127—Drum Type Aerial Tuning Inductance.

106. **High Potential Condensers.**—The Leyden jar type of condenser has been described in paragraph 84. The assembly of the flat plate condenser is shown in Fig. 129 where three banks of condenser plates are connected in series. The student should note from this diagram how the connecting tabs are brought out from the sheets of tinfoil and the manner in which the plates are stacked up. It will be seen from the detail that a *left hand tab plate* is stacked up against a *right hand tab plate* and so on until the required capacity is obtained. When one group is complete, the entire unit is bound with canvas tape and immersed in a tank of oil.

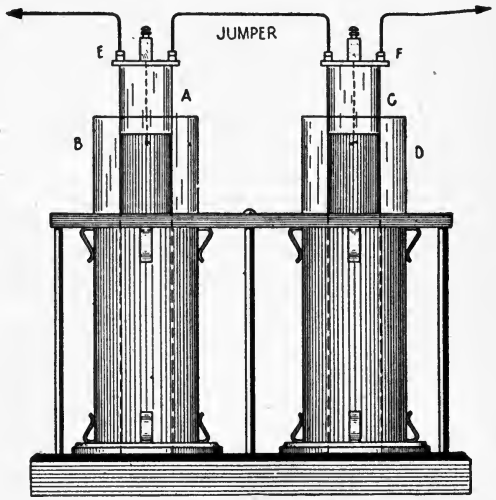

Fig. 128—Short Wave Condenser American Marconi Company.

The tinfoil is first attached to the condenser plates by means of a good grade of fish glue after which it is allowed to dry. The plate is then coated with shellac or hot paraffin and after drying again is ready for use.

Owing to the general inconvenience of assembling, an oil condenser of this type and the bother of replacing a broken plate, in case of breakdown, it is gradually being eliminated from ship sets. In case of accident, the copper plated Leyden jar affords a distinct advantage because a broken jar can be replaced within a few minutes. In event the charging current exceeds 15,000 volts a series parallel connection of condenser plates is required. This connection divides the voltage between the two banks and thereby reduces the strain on the dielectric.

Compressed air condensers are in use but the expense of construction does not warrant their general adoption. Briefly, the construction is as follows: A number of interleaved steel plates are enclosed in a cylindrical tank, one set of plates being insulated from the structure. The tank is pumped to pressure of 250 pounds air pressure which has sufficient dielectric strength to withstand potentials of 25,000 volts. The dielectric losses in a condenser of this type are, of course, zero and a permanent rupture of the dielectric medium is not possible. The tanks are very cumbersome and some difficulty is experienced in keeping them air tight.

107. **High Frequency "Choking" Coils.**—During the charge and discharge

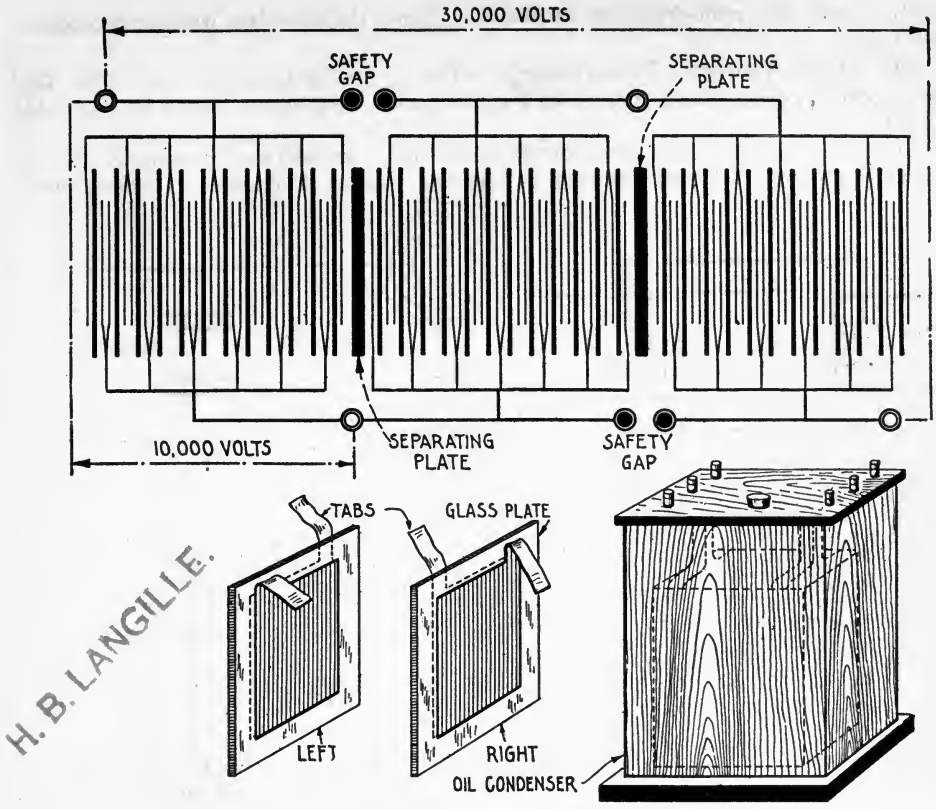

Fig. 129—Assembly of the Oil Plate Condenser.

of the condenser of the closed circuit, a back pressure is exerted on the secondary winding of the high voltage transformer. Although the impedance of the spark gap circuit is so low compared to that of the secondary winding of the transformer that the spark leaps the gap in preference, the discharge of the condenser may cause sufficient difference of potential between the turns of the secondary units of the transformer to puncture the insulation and short circuit adjacent layers. Possible punctures from this source may be obviated by means of "choking" coils of relatively high self inductance connected between the transformer and the condenser as shown at N^1 and N^2, Fig. 130. These coils consist of a few turns of fine wire wound in the form of a spiral, or in a single layer on a porcelain, glass or hard rubber tube. They offer but little impedance to the low frequency current flowing from the secondary winding of the transformer, but they

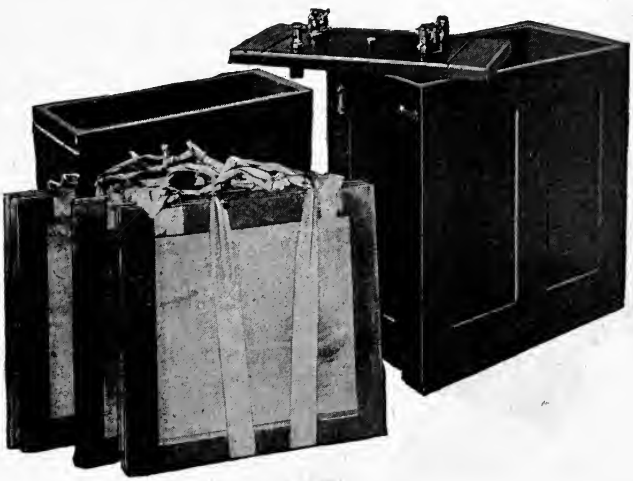

Fig. 129a—Marconi Glass Plate Condenser.

greatly impede the radio-frequency oscillations. Hence the secondary winding is protected from injury.

108. High Voltage Transformers.—The construction of the open and closed core types of transformers of the Marconi Company is shown in Figs. 131 and 132.

The primary coil of the open core transformer is wound on a core consisting of a bundle of fine iron wires bound in circular form. The core is covered with

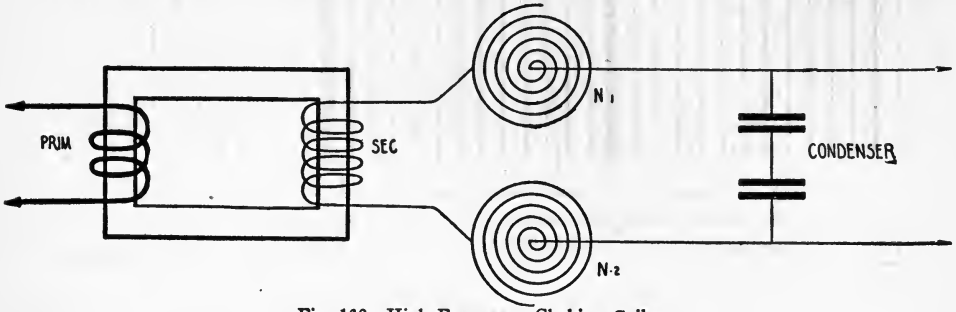

Fig. 130—High Frequency Choking Coils.

several layers of insulating tape followed by two or three layers of rather coarse copper wire, such as No. 10 or No. 12 S. C. C. The entire primary is then inserted in an insulating tube. The secondary winding is composed of several sections, each consisting of a number of thin pancakes wound with rather fine wire, such as No. 26 to No. 32.

Dry insulation is employed and in the larger sizes a blast of air is blown through the primary core to keep the transformer cool. The open core transformers are designed for primary potentials from 110 to 500 volts and for frequencies from 60 to 500 cycles. The secondary potential rarely exceeds 15,000 volts.

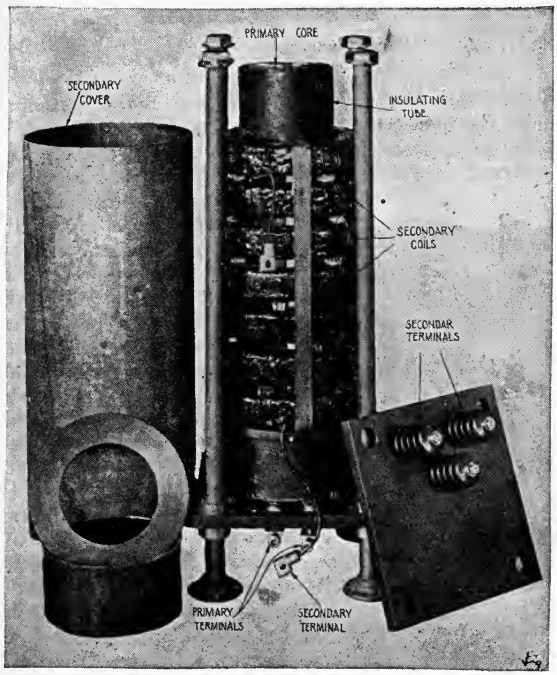

Fig. 131—2 K. W. 500 Cycle Open Core Transformer.

The transformer shown in Fig. 131 is one of the open-core type supplied with the 2 K. W. transmitters of the American Marconi Company. The primary core and winding are inserted in a Micarta insulating tube, but the secondary turns are split into groups, each consisting of several small pancakes of fine wire connected in series. The secondary turns are covered by an insulating tube which is thoroughly clamped in place. A safety spark gap mounted on the top of the transformer case has a third electrode, which is connected to earth. The primary terminals are underneath the base and the secondary terminals are mounted on the top.

Fig. 132 shows the construction of the closed core transformers. The core is rectangular and made up of thin sheets of iron which are insulated from one another. The primary and secondary windings are mounted one over the other on the middle leg. The entire transformer is immersed in a semi-liquid grease, which softens at about 115 degrees Fahrenheit.

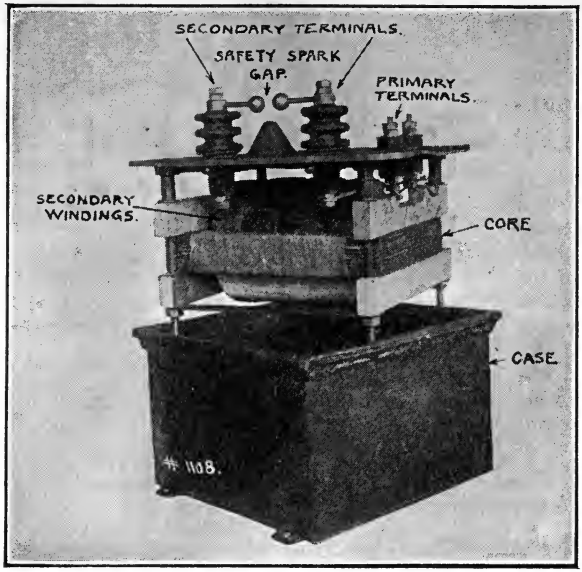

Fig. 132—Showing Construction of 2 K. W. Closed Core Transformer.

The closed core transformer is now supplied with all Marconi sets. It has the advantage of efficiency, and cheapness of construction, and requires but a small amount of space for erection.

A safety gap is provided to protect the secondary winding in case, the rotary gap is thrown out of synchronism with the charging current. In event of such happening, the spark will discharge across the gap and also to earth through a third electrode (the metallic cone-shaped projection on the case). The transformer case is connected to earth. If the transformer is to be taken apart to replace the windings, in cold climates, the case must be heated to melt the grease.

It is important that some part of the low frequency circuit of a radio-transmitter have a certain amount of magnetic leakage when the transmitting key is pressed, for it will be self-evident from the foregoing diagrams that when the spark discharges across the spark gap, the secondary winding of the transformer is practically on short circuit. The ordinary closed core transformer will under these conditions draw an excess of current with consequent danger of burning it out. If the transformer is provided with a magnetic leakage gap such as the air gap A in the transformer core, Fig. 133, the self-inductance of the primary winding will remain practically constant. Even on direct short circuit of the secondary, the transformer fitted with magnetic leakage gap will not burn out, and hence is particularly suitable for the excitation of radio-transmitters. In the Marconi sets, the requisite amount of magnetic leakage takes place at the generator, the armature being constructed to have very high values of self-inductance.

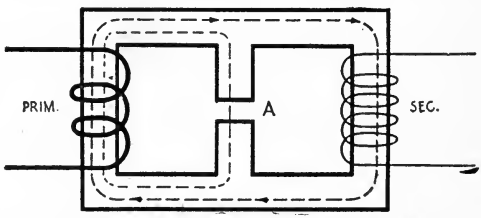

Fig. 133—Closed Core Transformer with Magnetic Leakage Gap.

The 2 K. W. 500 cycle transformers furnished with the Marconi panel transformers require no external reactance coil except when the set transmits at the wave length of 300 metres. To reduce the power for the reduced condenser capacity at this wave length, a small fixed reactance coil is connected in series with the primary winding.

If the primary power is to be reduced by steps a reactance regulator is required with any type of set.

109. Reactance Regulators.—The flow of current through an alternating current transformer is preferably regulated by a "choking" coil of high self-inductance rather than by a variable resistance. These coils, which are termed *choking coils* or *reactance regulators,* generally consist of a few turns of heavy insulated copper wire wound over an iron core.

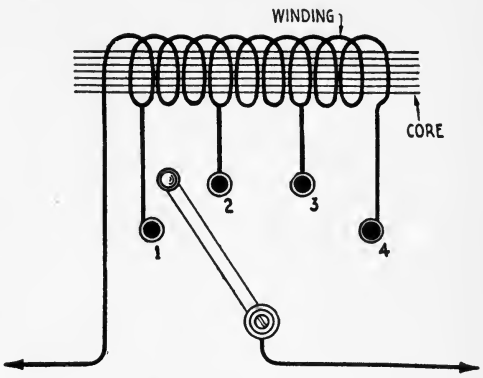

Fig. 134—Primary Reactance Coil.

Two types are shown in Figs. 134 and 135. When an alternating current passes through the coil, the corresponding magnetic lines of force rise and fall with the current, but the collapse of the field sets up a counter E. M. F. which acts as an effective resistance. The flow of current can be varied by a multipoint switch as in Fig. 134, or by drawing the iron core in and out of the windings as in Fig. 135. In the design of Fig. 135 a "U" shaped iron core is inserted in two windings connected in series. The self-induction of the coil is varied by moving the core in and out the windings.

Certain types of high potential transformers are designed for direct connection to the power mains, and therefore they do not require a reactance regulator.

110. Aerial Changeover Switch.—The object of the aerial switch is to connect the aerial alternately from the transmitting to the receiving apparatus. Because of the potentials of the transmitting apparatus, the receiving apparatus must be completely disconnected from the transmitting aerial by a switch with a break of at least 6 inches in length.

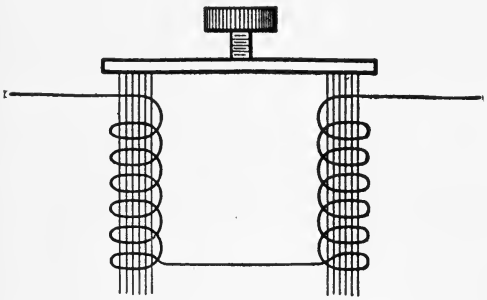

Fig. 135—U Shaped Reactance Coil.

An aerial switch of recent design, the type S. H. switch of the Marconi Company is indicated in Fig. 136 with the necessary diagram of connections for a commercial radio installation. When the handle of the switch is thrown upward, the apparatus is connected for receiving, but in the downward position the transmitting apparatus functions. The switch controls several other important circuits as well as the aerial circuit connection. Thus when the switch is thrown to the transmitting position,

(1) Contacts A, B, close the D. C. circuit to the generator field;
(2) Contacts C, D, close the circuit to the automatic motor starter or to a motor driven blower;
(3) Contacts E, F, close the circuit to the primary winding of the power transformer;
(4) The spring contacts R, R, spring together and connect the transmitting apparatus to the aerial system.
(5) The circuit to the primary winding of the receiving tuner is broken between G and K;
(6) Contacts L and M place the detector on short circuit;
(7) Contacts N and O short circuit the telephones.

The reverse connections and disconnections, of course, take place when the switch is thrown to the receiving position.

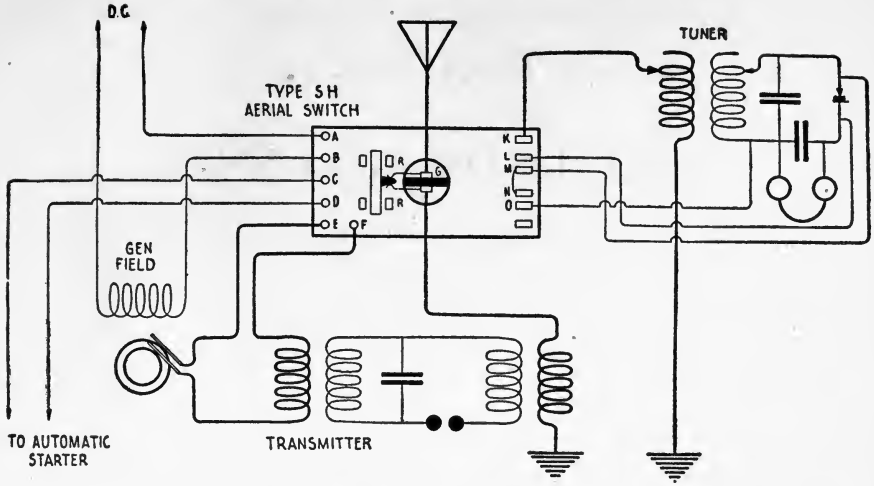

Fig. 136—Connections of a Modern Aerial Changeover Switch.

It will be evident from the foregoing that during the sending period at a given station, the receiving tuner is thoroughly disconnected from the antenna and during the receiving period the circuit to the field winding of the generator is interrupted because otherwise the current flowing to the meters will induce interfering currents in the receiver which may swamp out the radio signals from a far distant station. Other types of aerial change-over switches are described in Part IX.

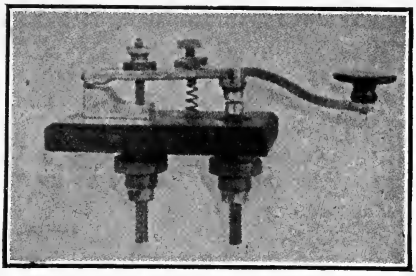

Fig. 137—A Hand Manipulated Telegraph Key.

111. Transmitting Keys.—The signalling keys for radio telegraphy are of heavier construction than those used in landline telegraphy because they are required to interrupt large values of current. It is found possible to break current up to 35 amperes by a hand manipulated key, but for current in excess of this value, a magnetically operated relay type of key is employed.

One type manufactured by the Marconi Company appears in Fig. 137. Earlier types had platinum points for breaking the current, but silver contacts of increased area have proven a satisfactory substitute.

The circuit of an electromagnetic key is shown in Fig. 138. A pair of magnets M, M^1 are wound to approximately 150 ohms resistance and connected to 110 volts D. C. through a small W. U. sending key. Extra large contacts A, B are mounted on the armature and stationary posts which may break 50 or 60 amperes without arcing. Another type has a solenoid winding with a plunger extending into a box of oil. The contacts make and break the circuit under oil, reducing arcing to a minimum.

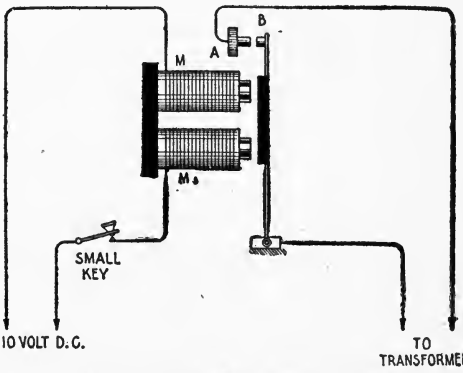

Fig. 138—Circuits of Magnetic Key.

In certain high power stations specially constructed electromagnetic keys interrupt the circuit from the secondary winding of the transformer instead of the primary. 500 kilowatts can be broken in this manner.

PART VIII.

AERIALS OR ANTENNAE

112. Function of the Aerial. **113.** Determination of the Wave Length From the Dimensions of an Aerial. **114.** Fundamental Considerations. **115.** Various Types of Aerials. **116.** Directional Aerials. **117.** Standard Marconi Aerial. **118.** The Deck Insulator. **119.** Installation of the Aerial. **120.** Earth Connection. **121.** Radiation. **122.** Antenna Decrement. **123.** Transmission Range.

112. Function of the Aerial.—The function of the *aerial or antennae* of any given radio station is two-fold:

(1) To radiate energy in the form of electromagnetic waves;
(2) To absorb part of the energy radiated by the distant transmitter.

The stations employing two aerials, one for transmitting and one for receiving are few in number; in fact, the great majority of wireless stations employ a single antenna for both purposes, which in its simplest form consists of a wire of *silicon bronze, copper* or *aluminum* supported vertically by an insulator from a mast or tower. The aerials for present day ship use consist of 2, 3 or 4 wires connected in parallel with adjacent conductors placed from 2½ to 3½ feet apart.

Not all aerials, however, are supported vertically; the great majority have a *flat top portion* which extends horizontally to a distance varying from 40 to 6,000 feet, the length depending upon the use to which the aerial is to be put or to the power of the station.

Experimentation and reasoning show that the various types of aerials do not radiate with equal intensity in all directions. A certain type, for instance, has a distinctly *directive characteristic* and will radiate its energy more strongly in a given direction. Still another type confines the greater part of its radiation to two opposite directions. Not only does the factor of radiation require to be taken into account but added to this are the *tuning qualities of the radiated wave,* which are somewhat affected by the design of the aerial. It is, therefore, well to review at once the *factors* governing the type of aerial adopted in any particular case.

Chief among the controlling factors are:

(1) The space available for erection;
(2) The total expense of installation;
(3) The radiating properties;
(4) The desired characteristic of the radiated wave (whether "sharp," "broad" or "directional").

Without regard to the foregoing considerations, the dimensions of an aerial are governed:

(1) By the length of the wave to be radiated;
(2) By the space available for erection.

As we have shown, an aerial possesses both *distributed capacity* and *inductance* which combined give it a defined period of oscillation when a charge of electricity is applied to it. These oscillations will set up a wave motion the length of which is related to the capacity and inductance of the system in the

following manner: If the capacity (C) be measured in *farads* and the inductance (L) in *henries,* the length of the wave will be equal to $4 \times V \times \sqrt{LC}$, where V = the velocity of electric waves in ether (300,000,000 meters per second).

Now the length of the radiated wave can be increased by connecting a coil of wire (aerial tuning inductance) at the base of the aerial, or decreased by connecting a condenser in series at the base, but there are certain limitations in either direction as will be presently explained. Moreover with concentrated inductance at the base of the aerial we can no longer use the simple formula above for determining the length of the wave which must now be modified to read, wave length $= \frac{2\pi}{K} \times V \times \sqrt{LC}$, where K is a certain correction factor the ratio of the inductance of the coil to the total inductance of the aerial.

Experiment indicates that it is not advisable to load an aerial with inductance to radiate a wave more than four times the natural wave length, because the insertion of greater amounts will reduce the flow of current considerably and thereby reduce the range of the transmitter. In fact, the maximum transmitting range is obtained in every case, when the aerial radiates at a wave length near to its fundamental wave. *The use of localized inductance decreases its decrement, but does not add to the energy of the oscillations.* Hence, large amounts of loading inductance are, in transmitter aerials, to be avoided. The addition of inductance in the antenna circuit up to a certain point is favorable to the *tuning qualities* of the radiated wave, but beyond this point, unless the capacity of the aerial be increased, the flow of current will be reduced considerably.

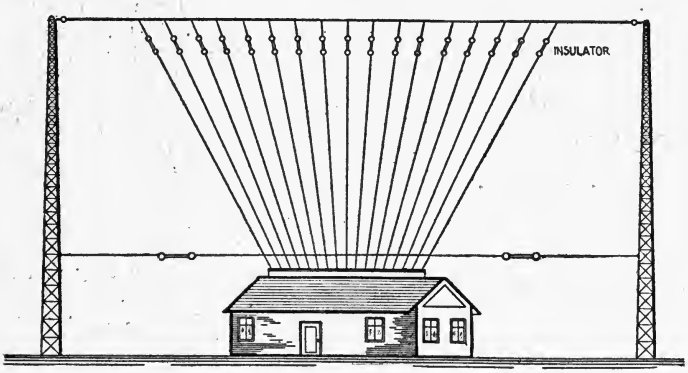

Fig. 139—Vertical or Fan Aerial.

A small amount of inductance is, of course, inserted at the base of the aerial to act as the secondary winding of the oscillation transformer, but, generally, it need not exceed 10,000 to 15,000 centimeters. In all cases, the length of an aerial is governed principally by the length of the wave to be radiated, *but to permit the insertion of the secondary inductance, the dimensions should be such that its natural wave length will be less than the length of the radiated wave.*

It is easily seen that if the length of the aerial be increased, both the inductance and capacity will be increased and the radiated wave accordingly. Hence, if the aerial is found after erection to be too long for the required wave, either the length of the aerial can be reduced or the length of the wave can be artificially reduced by means of a series condenser. Increased flow of antenna current will be obtained in any case if an aerial is selected, the dimensions of which will permit the required wave to be obtained without the series condenser, but aboard ship an aerial of the correct dimensions cannot always be obtained; in fact, a *short wave condenser is generally used for the* 300 *meter wave and a small amount of inductance for the* 600 *meter wave.*

113. Determination of the Wave Length from the Dimensions of an Aerial. —The fundamental or natural wave length of an aerial can be computed directly from the dimensions, the most notable contributions to the determination having been made by Prof. G. W. Howe* and Dr. L. Cohen; but generally these formulæ are too complicated for the practical worker; hence, the following approximate method may be used. First, it may be

*G. W. Howe, Wireless World, Dec., 1914, Jan., 1915.

mentioned that the natural wave length of a four-wire horizontal aerial with the wires spaced about 2½ feet apart will be approximately 4.4 to 4.8 times the total length of the aerial, that is, the length from the extreme end down to the apparatus at the station house. This factor is, of course, extremely approximate, for it does not take into account the presence of nearby conductors, such as chimneys, metal roofs, mast guys, trees, etc., some of which have the effect of increasing the capacity of the system.

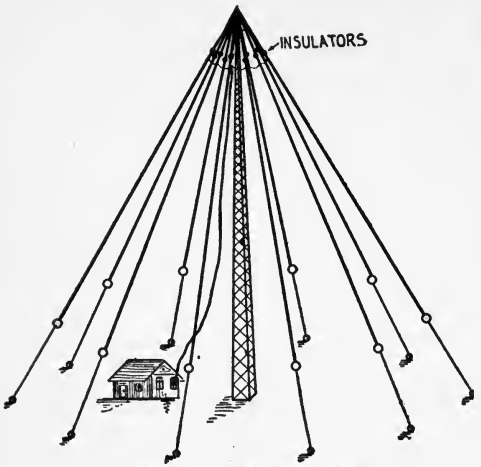

Fig. 140—Umbrella Type Aerial.

For an aerial system comprising, let us say, four wires spaced 2½ feet apart, the natural wave length is not much greater than that of a two-wire aerial with equivalent spacing, because although the addition of wires increases the capacity slightly, it also decreases the total inductance of the system, and generally these two factors nearly offset each other. Thus, in a given instance, a two-wire aerial with wires spaced 8 feet apart had a natural wave length of 325 meters, and the addition of two wires (inserted between) merely increased the wave length to 345 meters.

If the wires of an aerial are widely spaced apart, the capacity is greatly increased, and the total inductance somewhat increased, due to the diminishing of the mutual inductance between adjacent wires. But the increase of capacity exceeds the decrease of inductance, and the natural wave length will therefore be increased considerably. In practice, it is the custom to space the wires so they will be mutually inductive, the distance between adjacent wires not exceeding three feet.

114. Fundamental Considerations.—In the design of a wireless aerial the important points to be considered are:

(1) The aerial wires must possess great tensile strength and be of good conductivity;
(2) There should be several parallel wires;
(3) Adjacent wires should be spaced 2 to 3 feet;
(4) The wires must be thoroughly insulated at all points of support;
(5) If possible, the aerial should be erected in a clear space and at least a half-wave length from all metallic structures.

The matter of antenna insulation is extremely important; the antenna insulators should not only possess high specific resistance, but they should also be of considerable length to prevent the high voltage current discharging over them to some nearby metallic conductor. Particular care must be taken to insulate the free end of an aerial because, owing to the fact that the voltage and current are not uniformly distributed in vertical aerials, a very much greater potential exists at the top than at the base. This non-uniform distribution exists to some extent in all types of aerials, but is less manifest in the flat top aerials than in vertical types. Hence any conductors at the top or the free end of the aerial that would tend to start leakage of the high voltage current should be widely separated and thoroughly insulated from the aerial wires.

115. Various Types of Aerials.—Four general types of aerials are in use:

(1) The vertical or fan aerial;
(2) The umbrella aerial;
(3) The inverted "L" flat top aerial;
(4) The "T" aerial.

(*a*). The *vertical aerial* shown in Fig. 139 consists of a *fan* or *harp* of copper or silicon bronze wires held vertically into space by a *wooden mast,* a *steel tower* or any convenient structure of sufficient height. The wires of the harp may or may not be joined at the top. All wires, however, must converge at the lower end

where they enter the station house and are connected to the apparatus. The free end of the vertical aerial must be well insulated to prevent direct leakage to the supporting halyards or stays, and at the lower end the wires must be stayed to take the strain off the station house roof insulator.

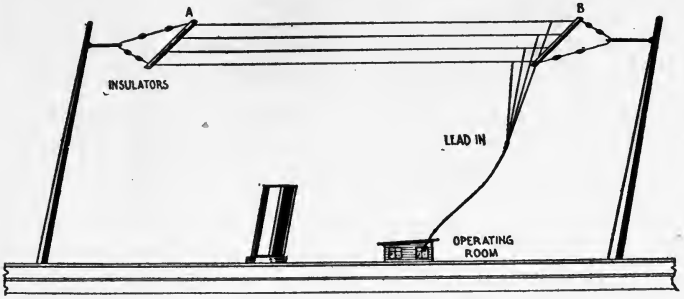

Fig. 141—Inverted "L" Flat Top Aerial.

Although the vertical aerial is acknowledged to be the best radiator of electromagnetic waves practically equal results can be obtained from a flat top aerial (of increased dimensions) with a less expensive supporting structure. Irrespective of the degree of efficiency obtained, a vertical aerial could not possibly be used aboard vessels on account of the derrick booms, mast guys and smoke funnels which take up the space that would be required for erection.

(*b*). The *umbrella aerial* shown in Fig. 140 receives its name from its general shape and similarity to an umbrella. It will be noted in this diagram that a number of wires spread radially in several directions from a common center at the top of the mast, and that a wire extends therefrom to the apparatus in the station house. The ribs of the umbrella generally are about two-thirds the length of the mast, but the guying out wires must be six to seven times the length of the vertical part.

Although it has been found to be of some value for portable military sets, the umbrella aerial is scarcely employed in commercial working except in certain high power stations designed and erected by German engineers.

(*c*). The *inverted "L" flat top aerial* of Fig. 141 is almost universally employed for ship service. It consists of a number of parallel wires stretched between two masts and attached on either end to *wooden* or *metal spreaders,* which are thoroughly insulated from the supporting halyards. The horizontal wires A to B are called the *"flat top portion"* and the vertical wires, *the "lead-ins."*

The lead-in wires, which should have equal conductivity to the wires in the flat top, are attached to one end of the horizontal wires, then passed through a *deck insulator* and finally connected to the apparatus within the station. The flat tops of the ships under control of the Marconi Wireless Telegraph Company of America vary from 75 to 250 feet in length and the lead-ins from 70 to 150 feet.

If the lead-ins are attached to the center of the flat top, as in Fig. 142, the aerial is said to be of the *"T"* type.

Either *"T"* or *"L"* aerials are almost universally employed on vessels, principally because they are more convenient to install. Those in the Marconi service have 2, 4 or 6 wires; the majority, however, have four wires spaced from 2½ to 3½ feet.

The fundamental wave length of the "T" aerial is invariably less than that of the inverted "L" type of the same dimensions. When the lead-ins of a given aerial are removed from the end of the flat top and attached to the center, the total inductance will be less than with the previous connection, and since by this change, the capacity of the system remains practically unchanged, the length of the radiated wave will be less than in the case of the "L" aerial. This is easily understood if viewed in the following manner: Beginning at the point where the lead-ins are attached, the two ends of the flat top may be considered as two aerials in parallel, and, as is well known, the inductance of two parallel conductors is less than that

of either taken separately; therefore, the total inductance of the antenna will be reduced and the radiated wave accordingly.

To illustrate the point: A four-wire inverted L type of aerial, 100 feet in length, 60 feet in height, has capacity of .0004 microfarads, and inductance of 62,000 centimeters. A "T" aerial of the same dimensions has capacity of .0004 microfarads, and inductance of 37,000 centimeters. Keeping in mind the simple formula ($\lambda = 38 \times \sqrt{LC}$) for computing the wave length of a radiative oscillator, the change in wave length brought about by this connection is easily determined. The wave length of the "L" aerial will be approximately 188 meters and of the "T" aerial, approximately 145 meters.

Since the standard transmitters of the Marconi Company are designed for the use of the 300, 450 *and* 600 *meter wave,* the precaution must be taken to select an aerial of such dimensions that a moderate degree of efficiency will be obtained on the two shorter waves and the maximum degree of efficiency at the longer wave; that is, we must provide an aerial that will give the highest possible aerial current for each of the three standard waves. An aerial having a fundamental wave length approximating 325 meters gives good values of antenna current at the 450 meter and 600 meter adjustment, and a fair value at the 300 meter wave adjustment, but an aerial of correct dimensions for this fundamental wave length obviously cannot always be erected.

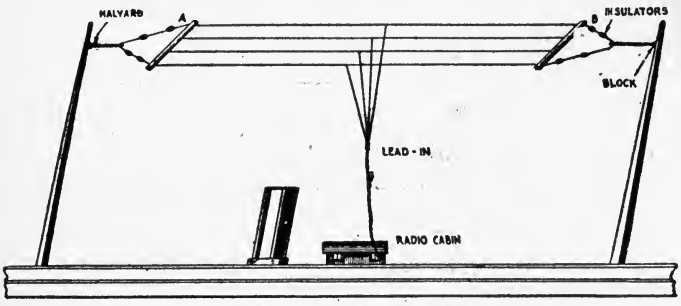

Fig. 142—"T" Flat Top Aerial.

On certain large vessels, the distance between masts is so great that if the wires were suspended the total length between them, a series condenser would be required for the 600 meter wave. Because the wave length of an aerial can never be reduced by a series condenser to less than one-half its natural length, the 300 meter wave could not be obtained in a case of this kind, and it would therefore become necessary to cut off a portion of the horizontal wires, to keep the radiated wave within limits. It is usual in such cases to stretch the wires from mast to mast and insert an insulator about 50 to 100 feet from one end or at such distance as will permit the required length of wave to be obtained. On the other hand, the aerials of small vessels, such as tugboats, etc., have to be loaded with large amounts of inductance to obtain the 600 meter wave. On such vessels the aerial is frequently made up of eight wires in order to obtain the maximum possible capacity.

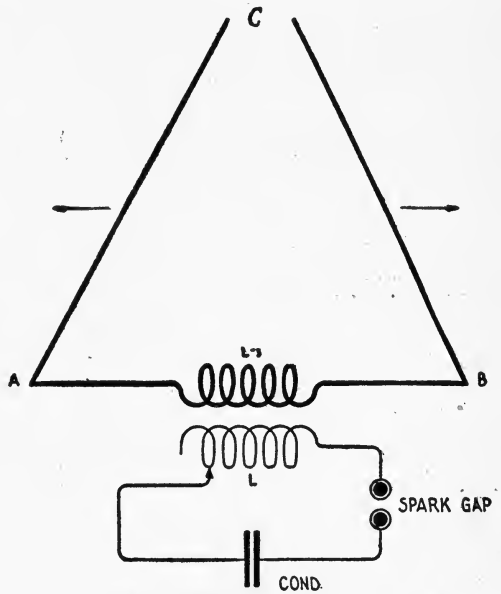

Fig. 143—Bellini-Tosi Directional Aerial.

With few exceptions, ships' aerials in the Marconi Service require a short wave series condenser for the 300 meter wave, but should the aerial be found upon measurement of its wave length to require a series condenser for the 450 meter wave, either the length of the flat top would be reduced

or the lead-ins be attached to the center. The general rule adopted by the American Marconi Company is as follows: If the length of the flat top is less than 125 feet, the inverted L aerial is employed, but if it exceeds 125 feet, the lead-ins are attached to the center. This permits the use of the three standard waves, gives good values of antenna current and affords a very favorable decrement of the oscillations.

As a matter of general information we may cite examples of actual measurements of the wave length of commercial ships' aerials. This data appears in the following table:

Type.	Length of flat top.	Height of flat top.	No. of wires.	Natural wave length.	Capacity mfds.
L	208 ft.	96 ft.	6	374	.00128
T	200	125	6	368	.00145
L	150	87	4	355	.00115
T-Imp.	250	95	4	412	.0015
L	200	90	6	360	.0015
L	120	100	6	325	.00132
T	130	92	4	285	.00075
T	250	150	4	426	.00096
L	200	90	6	360	.0023
L	125	55	6	230	.00085
T	151	110	6	290	.0009
L	200	98	6	425	.0024
L	170	85	4	380	.00082

We see from this table that the capacity of some aerials is rather large, but generally this increase is due to the presence of nearby metallic structures of some sort, such as mast guys, derrick booms, or steel masts.

We may sum up the advantages or disadvantages of the various types of aerials briefly, as follows: The *vertical aerial* is a very efficient radiator of electric waves; but if large amounts of energy are to be radiated, a large aerial and a very high supporting structure are required; the cost of the latter may be prohibitive. The *umbrella aerial* does not quite possess the radiating properties of the vertical aerial and due to the fact that the ribs of the umbrella must be guyed out several hundred feet from the base of the supporting mast, a large area is required for its erection. But with this disadvantage, the umbrella aerial is found to be of some value in portable military stations, where the ribs of the aerial act as guy supports as well as radiators of the electric waves.

The "L" and "T" aerials also do not radiate quite as efficiently as the simple vertical aerial of the same dimensions, but they have slightly lower natural decrements, and therefore, radiate a sharp wave with less localized inductance. Flat top aerials can be erected at much less expense than vertical aerials of much less length and they prove to be just as effective at less initial expense. Over all, it must be kept in mind that irrespective of the degree of efficiency obtained, the flat top aerial only can be conveniently employed aboard ship.

Wave Distortion.—Better signals are frequently obtained from a given transmitter by the use of a receiver aerial, a part of which is horizontal such as the "L" and "T" types. This may be accounted for in the following way: It has been assumed by several investigators that the lower end of the loops of force or ether strain radiated by an aerial are retarded in their propagation over dry earth, e. g., the lower part travels more slowly than the upper part, which causes the field of the radiated wave, so to speak, to be tilted against the direction of movement.

In any receiver aerial the greatest amount of energy is taken from the passing wave when the wires are at right angles to the magnetic field and parallel to the static field. It necessarily follows that if the loops of force radiated from the aerial of Fig. 99 do not hold their vertical position but are tilted forward, better distances would be covered, in fact, more energy would be induced in the receiver aerial, if part of it were vertical and part horizontal.

116. Directional Aerials.—*It has been definitely proven by Marconi that a horizontal aerial in which the length of the flat top largely exceeds the height will radiate more strongly in the direction opposite to the free end.* Also the strongest signals will be obtained at the receiver by an aerial, the free end of which points in the direction opposite to the free end of the transmitting aerial.

Taking full advantage of the unsymmetrical radiation from such aerials, the ***high power transoceanic stations*** of the Marconi Company employ ***directional aerials*** exclusively. The

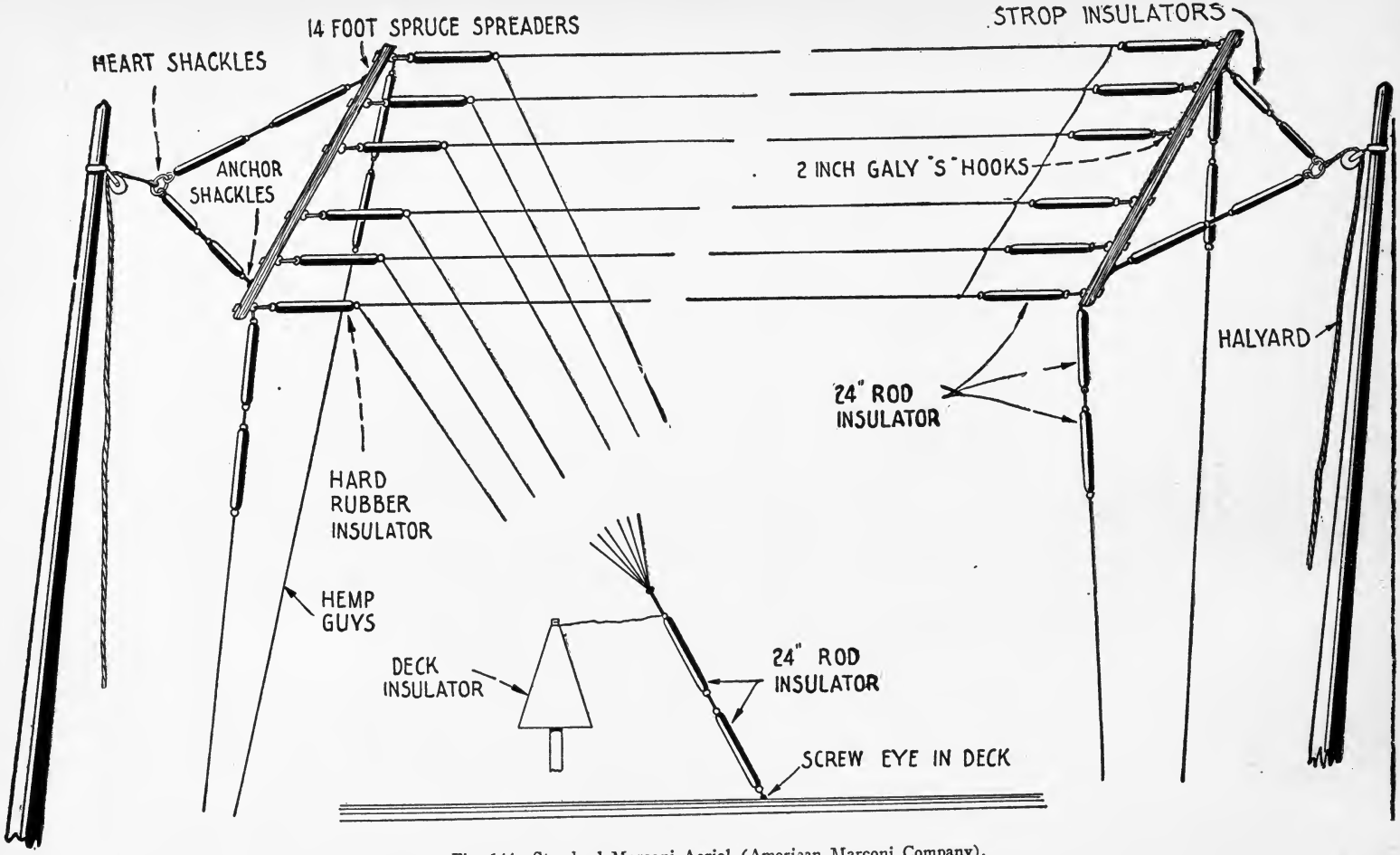

Fig. 144—Standard Marconi Aerial (American Marconi Company).

flat tops of such aerials are from 3,000 to 6,000 feet in length, and from 300 to 450 in height. The fundamental wave length is close to 10,000 meters.

The greater part of the energy radiated from a transmitter may be confined to a given direction by the use of the Bellini-Tosi aerial shown in Fig. 143. A triangular aerial, A, B, C, is supported by a vertical mast. The two sides of the triangle A, C, and B, C, make an angle of 30° with the vertical, and the third side is horizontal to the earth with the coil L-1 inserted at the center. L-1 is inductively coupled to a spark transmitter and tuned to syntony. An aerial of this type will radiate its energy with greatest intensity in the direction of its own plane, the radiation in a direction perpendicular to the triangle being zero. In any direction making an angle ϕ with the plane of the triangle, the intensity of the radiation varies as the cosine of the angle ϕ. The triangular aerial may be used for receiving purposes as well, and if the aerial be arranged so that it can be turned on its axis the greatest strength of signal will be obtained when the *plane* of the antenna points in the direction of the wave front. In modified form these aerials are made use of in connection with the Marconi direction finder, which will be described in Part XIII.

117. Standard Marconi Aerial.—Now that the fundamental design of the various aerials has been shown, the construction of a *standard Marconi ship's aerial* (American Marconi Company) will be described in detail. It will be noted from the diagram of Fig. 144 that the flat top contains six silicon bronze wires, each containing 7 strands, No. 18 wire. The *wires are preferably equally spaced* and are attached to *spruce spreaders* from 14 to 18 feet in length which in turn are attached to the *running halyards* by a *bridle* which is made up of *strop insulators*. These insulators consist of ⅝ inch *Russian boat rope* which is partly covered by a *hard rubber tube*. The space between the tube and the rope is filled with *hot sulphur* which when cold, hardens and keeps out moisture. Both ends of the bridle terminate in a *heart-shaped shackle* to which a *galvanized steel halyard wire* for *raising and lowering the aerial* is attached.

To prevent the spreaders from swaying, *side stays* are attached to the ends (or the spreader) and fastened to the mast. Twenty-four-inch *hard rubber rod insulators* are inserted in the rope to prevent leakage of the current in wet weather. It will be seen also that each wire of the aerial is insulated by a 2-foot hard rubber rod which is attached to the spreader by an *eyebolt*.

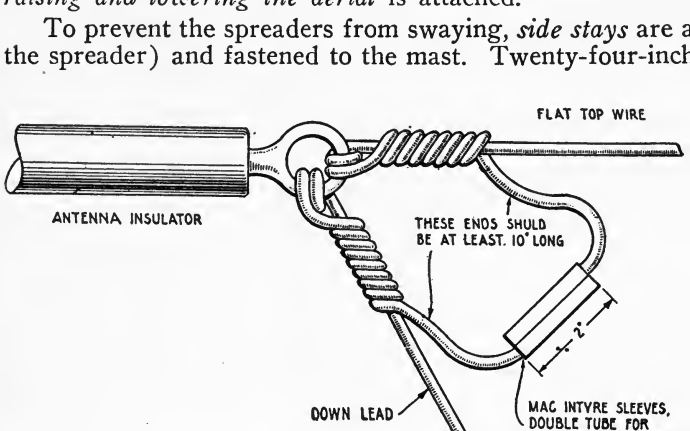
FLAT TOP WIRE
ANTENNA INSULATOR
THESE ENDS SHULD BE AT LEAST. 10' LONG
2'
DOWN LEAD
MAC INTYRE SLEEVES, DOUBLE TUBE FOR #7-18 WIRE SOLDERED NOT TWISTED

Fig. 144a—McIntyre Sleeve Connector.

The lead-in wires are attached to one end of the flat top and fastened to the *deck or cabin insulator*. To remove the strain from this insulator, two hard rubber rod insulators are attached to the aerial and fastened to the deck by a wood screw as shown in the drawing. Positive connection is made between the lead-ins and the flat top by means of a *McIntyre connector* shown in the detail of Fig. 144A.

The general design shown in Fig. 144 is not always duplicated in detail, but wherever possible it is adhered to.

118. The Deck Insulator.—The transmitting aerial must be well insulated at the point where it enters the radio operating cabin by an insulator that will withstand at least 30,000 volts. One form of *deck insulator* is shown in Fig. 145. A

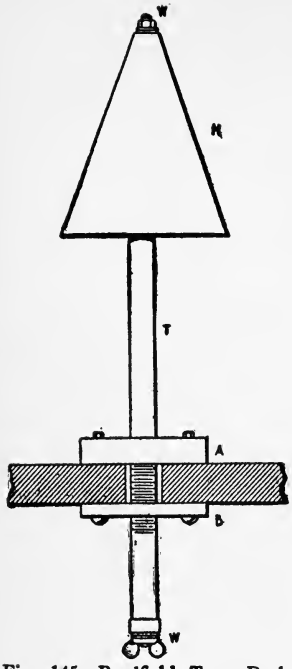

Fig. 145—Bradfield Type Deck Insulator.

long *hard rubber tube T* about 2 inches in diameter has a *brass rod* extending through it which terminates at each end in a *wire connecting lug, W*. The tube is threaded at the center to take two wooden blocks A, B, one of which is placed above the deck, the other underneath. After these blocks are drawn up tightly, the wood screws are inserted. To insure a watertight joint, a piece of *canvas strip* is placed underneath the blocks and thoroughly covered with white lead. A *metal hood,* H, fastened to the exposed end of the tube protects it from dampness.

The latest type of deck insulator is shown in Fig. 146, wherein a large electrose insulator has a heavy brass rod moulded securely into it which terminates at either end in a connecting lug. The outside of the insulator is threaded, and after it is inserted in the hole in the deck, it is drawn up tight by the collar, R, which is threaded on the inside. Other types of deck insulators are in use, but those just described are indicative of modern practice.

119. Installation of the Aerial.—The aerial of a ship should be installed, if possible, in such a way that the lead-ins will be free and clear of all mast guys or derrick booms. The further removed they are from parallel conductors of any kind, the less will be the danger of induced currents.

In measuring off the length of the flat top wires, approximately ten feet must be allowed at each end for the bridle, the insulators and the reef block; hence 20 feet must be subtracted from the distance between masts at the start. The distance between masts can generally be obtained from the ships' plans or by actual measurement from mast to mast on the deck. Each wire is accurately measured between two points marked off on the deck and the wire cut and attached to the insulators. Six or eight inches must be allowed for serving the wire through the eye of the antenna insulator.

All connections are thoroughly made on the deck, after which the halyards are passed through the reef block and fastened to the shackle on the bridle. The aerial is then pulled into space, it being freed from all obstructions by three or more assistants.

120. Earth Connection.—The connection from the transmitting apparatus to the earth plate should be direct as possible and the conductor should be one of high conductivity. In marine installations the earth wire is simply fastened to the metal bulkhead by a bolt, the earth connection being thus made through the hull. Usually this connection is not more than two or three feet in length.

On wooden vessels connection is made to the propeller shaft in the engine room

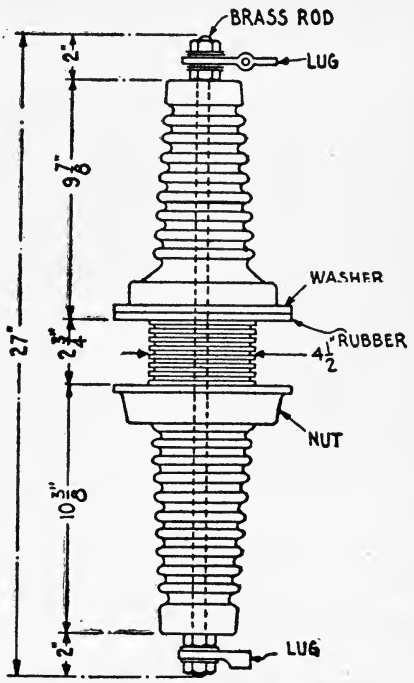

Fig. 146—Electrose Moulded Insulator.

or to the water drip at the smoke funnels. Installations grounded or earthed in this manner generally do not transmit as far as those on vessels with steel hulls. Occasionally a wooden vessel is placed in drydock and 200 or 300 feet of copper or yellow metal nailed on the bottom for an earth capacity. A strip of copper is then led from it to the radio cabin.

The earth plate for the land station is sometimes very elaborate and may consist of a great number of *copper or zinc plates buried in moist earth* to a depth of several feet. In addition a number of wires are spread radially from the station in all directions, being laid particularly directly underneath the flat top portion of the aerial. If the station is located on rock or dry soil, the earth wires are merely laid on the surface of the ground underneath the aerial. All wires are then joined to a common terminal and connected to the apparatus in the station.

The earth plates and connections at the Marconi trans-atlantic stations are very elaborate and expensive. A number of zinc plates are laid in a circle of 100-foot radius, the transmitting station being situated at the center. About 250 copper cables connect from the transmitting apparatus to each of the zinc plates. A number of copper cables stretch out radially from the zinc plates, some of which lie directly underneath the aerial. In addition, a number of wires may be laid directly underneath the aerial on the surface of the ground.

If the ground is particularly damp or marshy, modified arrangements may be used.

121. Radiation.—As shown by Fleming and other investigators, the power of the waves radiated from an aerial may be expressed as follows:

$$W = 1578 \times \frac{h^2}{\lambda^2} \times I^2$$

where W = energy radiated in watts;
h = height of aerial in meters;
λ = wave length of aerial in meters;
I = current in amperes at the base of the aerial.

For example, if an aerial 40 meters (130 feet) in height, radiates at the wave length of 600 meters and the aerial current is 10 amperes, the energy thrown off in the form of electric waves $= 1578 \times \frac{40^2}{600^2} \times 10^2 = 694$ watts.

This equation is based on the assumption that the current is uniformly distributed throughout the oscillator, which is not strictly true in all types, the distribution varying widely according to the form of the antenna. Hence, in order that the power of the radiation may be determined with any degree of accuracy, the average value of the current must be determined, and this, of course, will be less than the current at the base of the aerial.

The average value depends upon the form of the antenna, varying from $\frac{2}{\pi}$ to $\frac{1}{2}$ times the current at the base. If we denote the form factor of the aerial by the notation F the above formula should be written;

$$W = 1578 \frac{h^2}{\lambda^2} F^2 I^2$$

This can be written:

$$W = 1578 \times \left(\frac{F\,h}{\lambda}\right)^2 \times I^2$$

In this equation (F h) is the effective height of the aerial (the form factor multiplied by the height) and in the case of the flat top antenna, the value of h is taken as the height of the vertical portion only; also the form factor (F) merely takes into account the average value of current in the vertical part of the aerial.

The student will note that if the average value of current in the antenna circuit remains constant, the amount of energy radiated from a given aerial system depends directly upon the effective height and inversely upon the length of the radiated wave.

The following formula* is applicable for calculation of the form factor of any flat top aerial oscillating near its natural period:

$$F = 0.637\left(1+\frac{L}{h}\right)\text{Sin}\left(\frac{h}{h+L}\right)90°*$$

where L = length of the horizontal part for inverted L aerials and equals one-half total length flat top for T aerials.
h = height of vertical portion.

For example, if we had an aerial 100 feet in length, 60 feet in height, the value of the form factor,

$$= 0.637\left(1+\frac{100}{60}\right)\text{Sin}\left(\frac{60}{60+100}\right)90°$$
$$= 0.637 \times 2.6 \times \text{Sin}\ (0.375 \times 90°)$$
$$= 0.92$$

Now, if this aerial is worked near to its fundamental wave length, say 320 meters, and the current oscillating in the aerial circuit is 6 amperes, the power thrown off in electric waves,

$$= 1578 \times \left(\frac{0.92 \times 18.4}{320}\right)^2 \times 36 = 150+ \text{ watts.}$$

122. **Antenna Decrement.**—The damping of the oscillations flowing in the transmitting aerial is principally due to:

(1) Energy lost by radiation;

(2) Energy lost by resistance of conductors and earth plate;

The energy lost by radiation, is useful energy because it goes to make up the wave motion, but the other two losses detract from the efficiency of the set and therefore should be reduced to the lowest possible value. The resistance of the aerial conductors can be reduced to a minimum by using a number of stranded copper wires connected in parallel and in the average case the high frequency resistance will then not exceed two or three ohms. The earth plate resistance is reduced by an extended net work of conductors preferably buried in moist earth.

With an improperly adjusted transmitter there will be an additional source of antenna damping due to the re-transference of energy to the spark gap circuit. This may be prevented by properly adjusting the spark gap and coupling at the oscillation transformer.

The decrement due to radiation is usually determined by the insertion of localized inductance and the amount of inductance required for a given radiation decrement varies slightly with the construction, i. e., the form factor of the antenna. The antenna is so designed that an inductance which will give the correct wave length will also give the desired decrement when a properly adjusted transmitter is employed.

Since the energy radiated in the form of electric waves causes damping of the oscillations in the aerial circuit, the loss of energy by radiation may be expressed as an effective resistance or, in short, *"radiation resistance,"* which, of course, will be *expressed in ohms.* The radiation resistance is the quantity which multiplied by the square of the average current in the aerial enables us to determine the power of the radiated waves.

The radiation resistance of a flat top aerial is expressed,

$$R = 1578\left(\frac{Fh}{\lambda}\right)^2$$

Where R = resistance in ohms;
Fh = effective height of aerial;
λ = wave length in meters.

Hence an aerial, the effective height of which is 40 meters, operated at the wave length of 600 meters, will have radiation resistance of

*A. S. Blatterman, Oct., 1916, issue of the Wireless Age.

$$1578 \times \frac{40^2}{600^2} = 6.9 \text{ ohms.}$$

We see from this formula that the radiation resistance of an aerial depends directly upon its effective height and inversely as the length of the radiated wave. It is also clear that increase of the height will increase the wave length as well, and, therefore, the increase of the power of the radiation will not be so large with an increase of height as might be expected at first sight.

The radiation resistance (or radiation coefficient) of the vertical or fan aerials is generally higher than that of the flat top aerials, but, as mentioned previously, the flat top aerials are less expensive to erect, more convenient to install and since the radiation resistance should in any case be reduced by inductance, they are more desirable.

We want the radiation resistance of an aerial to be as high as possible so long as it does not seriously damp out the oscillations and spoil the tuning qualities of the wave; on the other hand we want the frictional resistance (including the conductors and the earth plate) to be as low as possible.

The oscillations of the antenna circuit will be less feebly damped, if a certain amount of inductance is inserted at the base but after a certain critical value is reached, the flow of antenna current will be reduced which will reduce the power of the radiated waves. The critical value can be determined in any case by noting the reading of the aerial ammeter and determining the decrement of the oscillations by a decremeter. *If a feeble decrement is obtained at the expense of antenna current, the efficiency of the set will be reduced.*

If the *effective capacity* (C), the *effective inductance* (L) and the *effective resistance* (R) of an aerial are known, the *decrement per complete oscillation* of the antenna circuit can be calculated by the formula previously given.

$$\delta = \pi R \sqrt{\frac{C}{L}}$$

where C = capacity in farads;
L = inductance in henries.

Now L and C can be measured by a wavemeter as will be shown in Part 11 and the effective value of R can be determined in the following manner: A closed oscillation circuit containing a quenched spark discharger is inductively coupled to the antenna circuit with an ammeter connected in series. At any particular value of primary power, the reading of the aerial ammeter is observed. A closed oscillation circuit having inductance and capacity of the same value as the aerial is now connected across the secondary winding of the oscillation transformer with the ammeter and a variable resistance in series. The closed circuit is set into oscillation and the resistance is adjusted until the ammeter gives the same reading as when connected in the antenna circuit. Obviously the value of R equals the total effective resistance of the aerial. The student having had some experience in radio will recognize this last circuit as the usual "dummy aerial" which is employed in the laboratory to make experimental determinations.

Assume for example that an aerial has effective capacity of .001 microfarads, effective resistance of 7 ohms and effective inductance of 100,000 centimeters, then

$$\text{Decrement} = 3.1416 \times 7 \times \sqrt{\frac{.000,000,001}{.0001}} = .068 \text{ per complete oscillation.}$$

A decrement of this magnitude is very favorable to non-interference of radio stations and is easily obtained with properly adjusted spark transmitters.

123. **Transmission Range**—It has been found that for a given length of wave radiated from the transmitter, there are certain heights of sending and receiving aerials, which will give the best signals over a given distance. The equation expressing the relationship of these quantities is as follows:

$$I_r = \frac{635 \times I_s \times h_s \times h_r}{\lambda \times d} \epsilon^{\frac{-0.0762 \times d}{\sqrt{\lambda}}}$$

Where I_s = current in sending aerial in amperes;
I_r = current in receiving aerial in milliamperes;
h_s and h_r = height of sending and receiving aerial in feet;
λ = wave length of transmitter and receiver;
d = distance between in miles.

The value of the receiver current I_r is that to be obtained when the resistance of the receiving aerial is 25 ohms.

If the resistance is greater or less, the factor 635 will be changed accordingly. The factor 0.0762 is the coefficient of absorption which denotes the rapidity with which ether waves are absorbed when travelling over sea water.

If we assume that 10 micro-amperes of current in the receiving aerial will create a just audible signal and 40 micro-amperes, a readable signal, the required antenna current at the sender for a given strength of signal in the receiver is readily obtained if the remaining factors in the equation are known. The formula is still the subject of considerable debate.

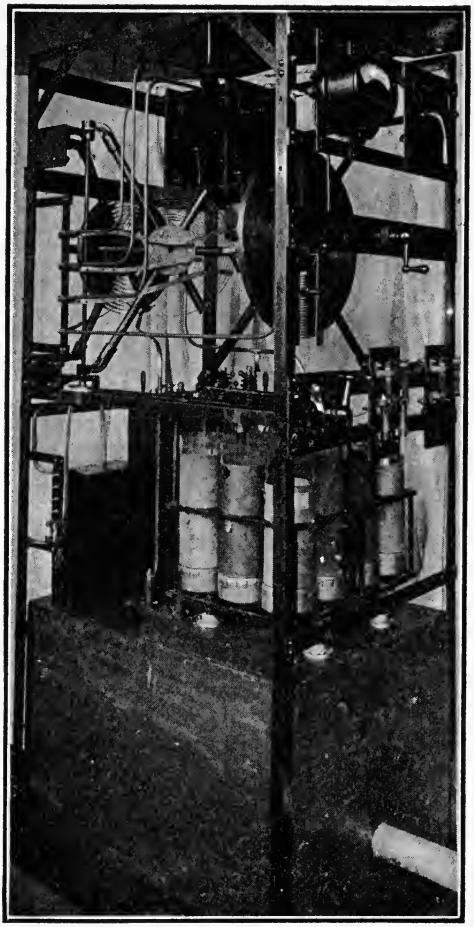

Fig. 146a—3 Kilowatt Non-Synchronous land station type of transmitter (American Marconi Company).

PART IX.

RECEIVING CIRCUITS, DETECTORS AND TUNING APPARATUS

STANDARD MARCONI RECEIVING SETS.

124. In General. 125. The Problem. 126. Simple Receiver. 127. The Inductively Coupled Receiver. 128. Other Methods of Coupling. 129. The Carborundum Detector and Tuning Circuits. 130. Adjustment of the Inductively Coupled Tuner. 131. The Action of the Carborundum Crystal. 132. Adjustment of Crystal Detectors. 133. Detector Holders. 134. Classification of the Receiving Detectors. 135. Fleming Valve Detector and Tuning Circuits. 136. Marconi Type 107-a Tuner. 137. Marconi Magnetic Detector and the Multiple Tuner Circuits (English Marconi Company). 138. The Marconi Type 106 Receiving Tuner. 139. Marconi Receiving Tuner Type 101 (American Marconi Company). 140. The Marconi Universal Receiving Set (English Marconi Company). 141. Electrolytic Detector. 142. The Three Element Valve Detector. 143. A Repeater Vacuum Valve Circuit. 144. The Vacuum Valve Amplifier. 145. Amplification of Radio Frequencies. 146. The Effects of Distributed Capacity. 147. The "End Turns" of a Receiving Tuner and End Turn Switches. 148. The Variation of a Radio Frequency Inductance. 149. Buzzer Excitation Systems. 150. Receiving Telephones. 151. Microphonic Relays or Sound Intensifiers. 152. Brown Amplifying Relay. 153. Atmospheric Electricity. 154. The Marconi Balanced Crystal Receiver (English Marconi Company). 155. Type I Aerial Change-over Switch. 156. Marconi Type 112 Receiving Tuner. 156A. General Advice for the Manipulation of a Receiving Tuner.

124. **In General.**—Told in brief, the function of the receiving aerial is *to absorb a certain amount of energy from the advancing electromagnetic wave in the form of radio-frequent oscillations;* but more specifically, the wave motion induces radio-frequent oscillations in the receiving aerial, and a part of their energy is made to operate some sort of signal making instrument within the station.

We have already shown an electromagnetic wave to be composed of an *electrostatic* and an *electromagnetic* field, the former being radiated (in the case of the vertical aerial) perpendicular to the earth and the latter at right angles to the transmitting aerial and horizontal to the earth. It appears that the maximum induction would be obtained at the receiving station if the aerial were of such shape or lay in such position that it would be at right angles to the magnetic field and parallel with the static field. But if we take into account that the radiated

wave is distorted when propagated over dry earth, for example (base travelling slower than top), it is easily seen that an aerial having a part horizontal and a part vertical will receive the maximum induction therefrom.

The necessity for electrical resonance in circuits of radio-frequency in which energy is transferred by coupling magnetically one to the other, has been explained in detail. In fact, for the maximum induction, *it is just as essential that two open circuit oscillators be adjusted to substantial resonance as two closed circuit oscillators.* Only by tuning the receiver aerial to the natural frequency of the transmitter aerial will the oscillations induced in the receiver antennæ attain their maximum amplitude; at all other adjustments (of the receiver aerial) the strength of the induced current will be less, depending upon the amount of *detuning* at the receiver.

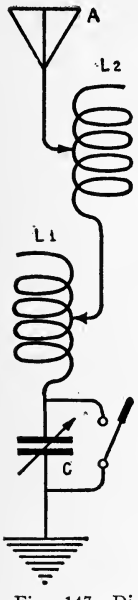

Fig. 147—Diagram Showing Apparatus Included in the Open Circuit of a Receiving Set.

Now the dimensions of receiver aerials differ widely, and, as may be expected, the circuit of the receiver antenna contains appliances whereby the oscillating period may be artificially increased or decreased to conform with the frequency of the advancing wave motion. These *tuning devices* are known as:

(1) The aerial tuning inductance;
(2) The short wave condenser.

By proper adjustment of these tuning elements the receiver aerial can be *electrically tuned to the wave radiated by the distant transmitter.* The advancing wave will then induce currents at a rate tending to build up the amplitude of the receiver current—that is, each half wave will have completed its work on the receiver aerial before the next half wave acts. But under conditions of *dissonance* between the transmitter and receiver aerials, the reactance of the receiving antenna circuit will not permit the induced current to build up to its maximum strength.

The position occupied in the antenna circuit by these *tuning elements* is shown in Fig. 147, where the *aerial tuning inductance* is indicated at *L*-2 and the *short wave condenser at C.* The third coil in this diagram, L-1, is employed to transfer the oscillations induced in the antenna circuit to a local detecting circuit, where they are translated into intelligible signals. Just as in the case of the transmitter aerial, *the aerial tuning inductance increases the fundamental period of oscillation of the receiver aerial, but in this case makes it responsive to long waves, while the short wave condenser decreases the fundamental oscillating period, making it responsive to waves shorter than the fundamental wave of the receiver aerial.*

Starting at the transmitting apparatus, the entire process involved in the induction of oscillating currents in a receiver aerial may be summed up as follows:

Assume a transmitter at the sending station of the 500-cycle synchronous spark type, giving 1,000 sparks per second. Each spark discharge will induce in the transmitter aerial a single group of radio-frequent oscillations, and each group will consist of from 25 to 100 complete oscillations, varying in number as the decrement. These oscillations will radiate a part of their energy in the form of a wave motion, and the length of a single wave will be equal to their velocity per second, divided by their number. If the receiver aerial is adjusted to electrical resonance with the oscillations of the transmitter, 1,000 groups of radio-frequent oscillations will be induced therein per second, and by appropriate devices they can be made to operate some sort of a signal making instrument, such as a telephone receiver.

The coils L-1 and L-2 and the variable condenser C are often termed the *frequency determining elements* of the receiving system, because they permit the natural oscillation frequency of the receiving aerial to be changed over certain given limits. In contrast to the coils of the transmitting aerial circuit, the inductances L-1 and L-2 are made of fine wire rather than copper tubing or heavy stranded cable. A typical variable condenser of the type employed in the Marconi wavemeter and receiving tuners is shown in Fig. 147a.

125. The Problem.—The relationship between the wave length (λ) the oscillation frequency (N) and the velocity of electric waves (V) has already been explained, namely:

$$N = \frac{V}{\lambda}$$

Hence for the 600 meter wave $N = \frac{300{,}000{,}000}{600} = 500{,}000$ cycles per second, and accordingly for 300 meter waves N = 1,000,000 cycles per second. Then, to be placed in resonance with the transmitter aerial, the receiver aerial must be adjusted in a way that if it were transmitting electric waves, the corresponding oscillation frequency, in the case of the 600 meter wave, would be 500,000 cycles, and for the 300 meter wave, 1,000,000 cycles.

Assume that the receiver antenna has been adjusted to the frequency of the transmitting station by means of the variable elements of Fig. 147, then the prob-

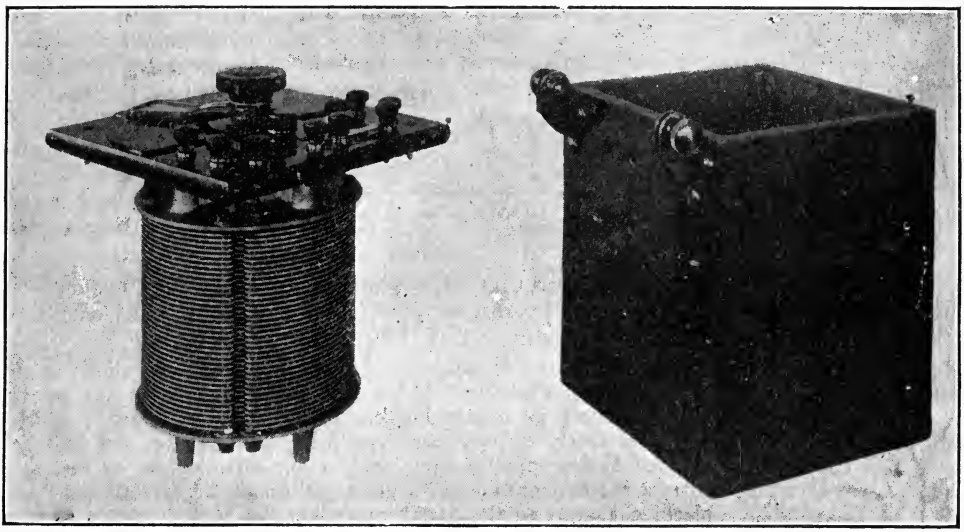

Fig. 147a—Variable Condenser for Receiver Circuits.

lem remaining is to make audible the feeble currents induced in the receiver aerial or at least to make known their presence by some sort of a current indicator.

The ordinary *magneto telephone receiver* is a very sensitive indicator of electric current, but experiment teaches that the maximum response is obtained from this instrument when an alternating current or an equivalent fluctuating direct current of a frequency varying between 300 and 500 cycles per second flows through its windings. In fact, at frequencies in excess of 10,000 cycles per second the movements of the telephone diaphragm are inaudible to the human ear which will not respond to vibrations in excess of 20,000 per second.

Another factor working in opposition to connecting the telephone in the antenna circuit directly, is the fact that the *impedance* of the telephone winding will not permit high frequency currents to pass. Hence we are compelled to either convert the current of radio-frequency into a *uni-directional pulsating current* or into an *alternating current of a frequency within the range of the human ear.*

Currents of radio-frequency induced in receiver aerials may be made audible by means of a simple *rectifier*—a device which will permit the *preponderance of current* to flow through a given circuit in one direction only. If a rectifier is placed in series with a circuit

in which a current of radio-frequency is flowing, the latter will be converted into a *direct or pulsating current.* Numerous minerals and compounded elements, notably among these carborundum, have been found to possess the *property of rectification,* and hence a group of incoming oscillations such as shown in Fig. 148a may have either their *positive* or *negative* currents cut off as in Fig. 148b, and if a head telephone is connected in series with the rectifier, *pulsating direct current* will traverse the windings as shown in Fig. 148c.

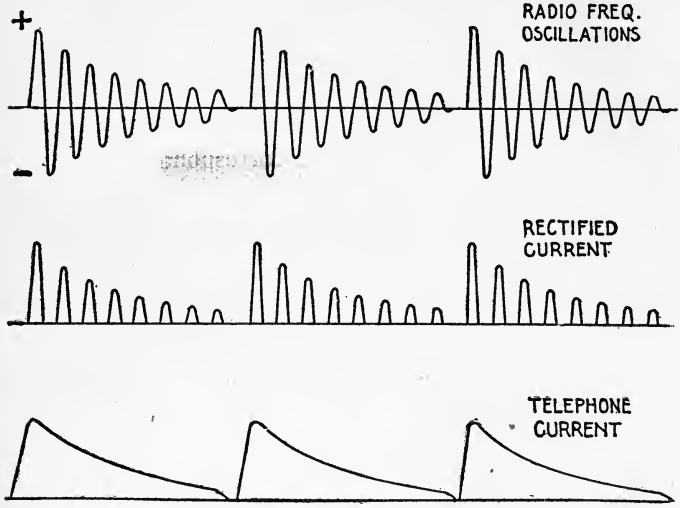

Fig. 148a, b, c—Showing how Incoming Oscillations are converted to Direct Current Pulses.

Now, if *continuous* oscillations of unvarying amplitude were induced in the receiver aerial, the rectified current would merely displace the telephone diaphragm and hold it in this position until the current is turned off, but since in the *damped* systems of radiotelegraphy, the *oscillations are discontinuous,* or occur in groups, the current falls to *zero at the end of each group,* and, hence, the diaphragm of the telephone is released, creating a single sound.

126. Simple Receiver.—The circuits of a simple radio receiver appear in the diagram of Fig. 149, wherein a *crystal rectifier D,* connected in series with the antenna A, is shunted by the *receiving telephone P.*

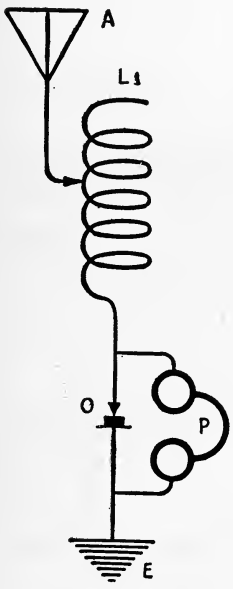

Fig. 149—Circuit of Simple Radio Receiver.

The action of this apparatus during the reception of signals may be explained as follows: A train of waves radiated by the transmitter induces an alternating current in the aerial circuit which will flow freely through the crystal in one direction, but will be opposed in the opposite direction. In one direction, let us say, the current passes from the earth upward through the crystal, and thus places a charge on the aerial wires, but the return current is opposed; hence the rectified oscillations (for each spark of the transmitter) accumulate a charge on the antenna wires, which at the termination of a wave train leaks to earth through the head telephone, creating a single sound for each group of incoming oscillations.

Because of its resistance, the crystal impedes the free flow of oscillations and, therefore, to some extent, destroys the *tuning qualities* of the aerial circuit. Hence, to enhance the tuning properties of the antenna system, the crystal is removed therefrom and connected in a second circuit, termed the *"local detector"* circuit.

127. The Inductively Coupled Receiver.—The two circuit receiver is shown in the diagram of Fig. 150, wherein a coil L-1, connected in the antenna circuit, performs *the double function of adjusting the frequency of the antenna system to resonance with the transmitter and transferring the induced oscillations to a secondary circuit, consisting of the coil L-2 shunted by the variable condenser C-2.* More clearly, the second circuit is coupled inductively to the first circuit. A crystal rectifier, D, and head telephone, P, joined

in series, are connected across the terminals of the secondary condenser. The two circuits are distinguished in the following manner: The circuit comprising the *aerial* and the *primary winding of the receiving tuner L-1* is called the *open oscillation circuit,* and the circuit comprising the *secondary coil L-2* and the *variable condenser C-2,* is called the closed oscillation circuit. They are also termed the *primary* and *secondary* circuits, respectively.

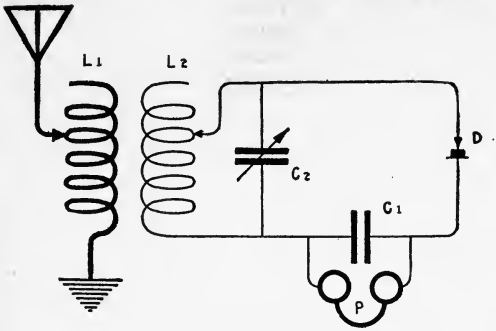

Fig. 150.—Fundamental Diagram of the Inductively Coupled Receiver.

The current induced in the receiving aerial is made audible in the receiving telephone in the following manner: When oscillations flow in the receiving aerial, an alternating current passes through L-1 and a corresponding alternating magnetic field cuts through the turns of L-2, inducing therein a current of radio-frequency which is built up in amplitude by placing the two circuits in electrical resonance. The variable condenser C-2 not only permits the closed circuit to be adjusted to resonance with the open circuit, but also permits a closeness of adjustment which the usual secondary inductance changing switch does not afford. If the coupling between the primary and secondary windings is relatively "loose," rather large amounts of capacity and small amounts of inductance are employed in the closed circuit, for the best strength of signal, but if the coupling between the windings is close, small values of capacity and rather large values of inductance are the factors which contribute to the maximum strength of signal.

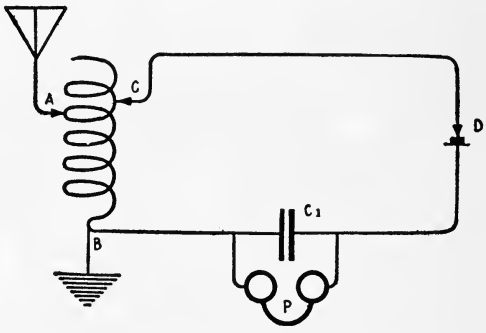

Fig. 151—The Conductively Coupled Receiver.

The oscillations built up in the secondary circuit by adjusting it to resonance with the antenna circuit, overflow to the shunt detector circuit, where part of the current is rectified by the crystal detector D and stored up in the condenser C-1. The charge accumulated in the latter during the time of a single train of oscillations, discharges through the head telephone P, causing the telephone diaphragm to vibrate at a rate corresponding to the spark frequency of the transmitter.

128. Other Methods of Coupling.—If the open and closed oscillation circuits of a receiver are coupled through an auto-transformer as in Fig. 151, the two circuits are then said to be *directly* or *conductively coupled.*

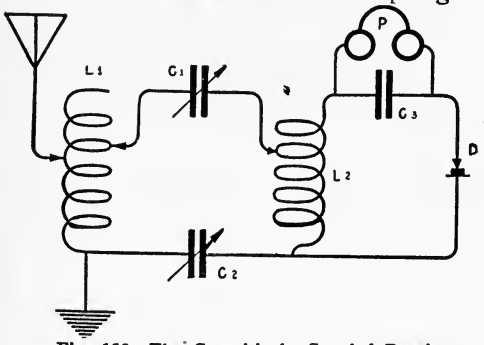

Fig. 152—The Capacitively Coupled Receiver.

In this system part of the turns of a single coil constitute the primary circuit and part the secondary circuit; the *turns between the points A and B may be considered as the primary winding* of the tuner, while *those from B to C may be said to constitute the secondary winding.* Now the oscillation frequency of the antenna circuit can be increased or decreased by the variable contact A and similarly for the detector circuit by contact C. Fundamentally the operation of this apparatus is similar to the inductively coupled receiver with the exception that part of the current induced in the antenna circuit flows directly through the shunt path afforded by the detector circuit. *The disadvantage of this method*

of coupling is that any change of wave-length adjustment of the open and closed circuits changes the coupling, but this can be prevented by connecting an aerial tuning inductance in series with the primary winding. *The primary and secondary windings may be "loosely" coupled at any particular wave length adjustment, by adding turns at the aerial tuning inductance and taking them out at the primary winding.* This will decrease the mutual inductance of the two circuits and therefore will reduce the coupling.

The method termed the *capacitive coupling* is shown in the diagram of Fig. 152. The primary and secondary coils shown at L-1 and L-2 are not in direct inductive relation.

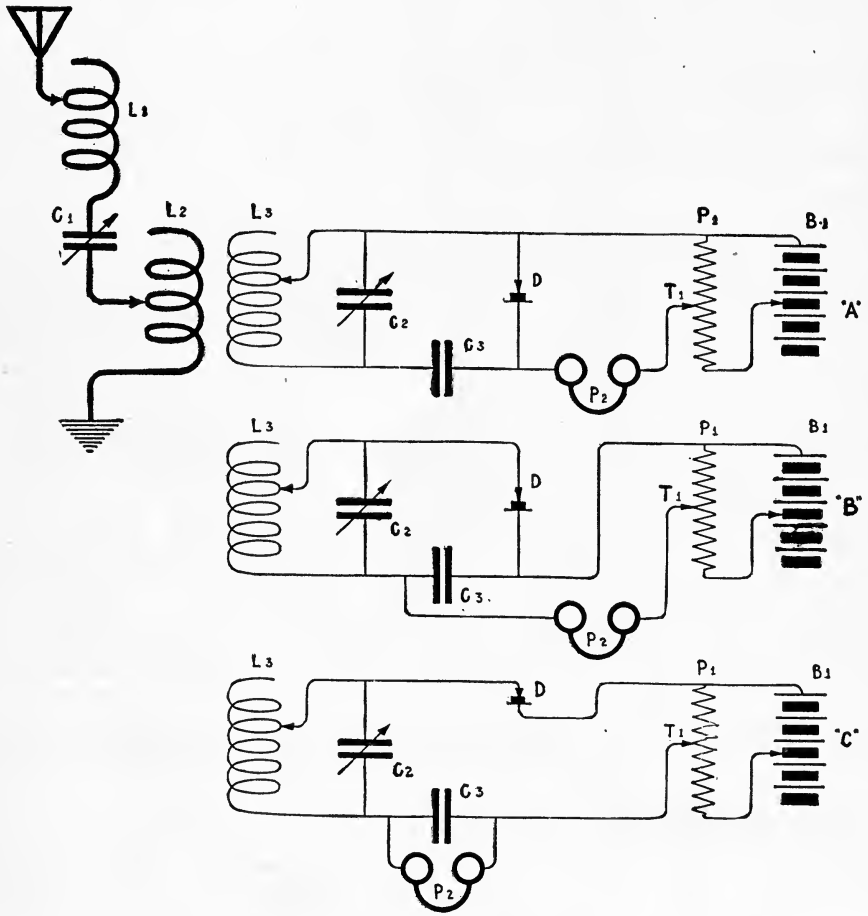

Fig. 153a, b, c—Complete Circuit for the Carborundum Rectifier and Receiving Tuner.

They are said to be *electrostatically coupled* through the condensers C-1 and C-2. In practice, the condensers C-1 and C-2 are mounted on a single shaft and their capacity varied simultaneously by a single control knob. It is claimed that since a fixed potential exists across coil L-1 the energy transferred to the secondary circuit varies as the capacity of condensers C-1 and C-2. Now the greater the coupling the greater will be the transfer of energy from the antenna to the detector circuit and hence the coupling* between the

*The author has had practically no experience with the capacitive receiver and therefore cannot speak authoritatively on the working of this circuit.

circuits varies as the capacity of the coupling condensers. It is claimed this circuit possesses the advantage that a fixed degree of coupling between the primary and secondary windings can be held while the wave length adjustment of the antenna and local detector circuits is being varied throughout the range of the tuner. It is probable, however, that this statement requires qualification.

In general the student will note from the foregoing that in any complete wireless telegraph system four circuits must be adjusted to or tuned to the same frequency of oscillation in order that communication may be established, as follows: At the transmitting station the closed and open oscillation circuits are adjusted for resonance. At the receiving station the receiving aerial circuit is adjusted to the frequency of the oscillations of the transmitter and the local or secondary circuit adjusted to resonance with the receiving aerial circuit; and for maximum response, the receiving detector must be adjusted to its maximum state of sensitiveness.

129. The Carborundum Detector and Tuning Circuits.—The most widely used of all detectors is the *carborundum crystal rectifier,* the tuning circuits for which are shown in Fig. 153a, b, c. These diagrams indicate as well the apparatus included in a modern receiving set. In addition two modified circuits showing the connection of the potentiometer in various modern tuners, are presented. Before proceeding with an explanation of the circuits of Fig. 153a, the function of the *potentiometer* will be explained.

The application of a weak battery current to the carborundum crystal and head telephone circuit has been found to have a marked effect on the intensity of the incoming signals, but the strength of the current must be carefully and closely regulated and must be passed through the crystal in a definite direction to secure the maximum response. Ignoring for the moment an explanation of the function of the local current in a radio receiver, the reader should note the diagram, Fig. 154, showing the connections of the potentiometer to a local battery.

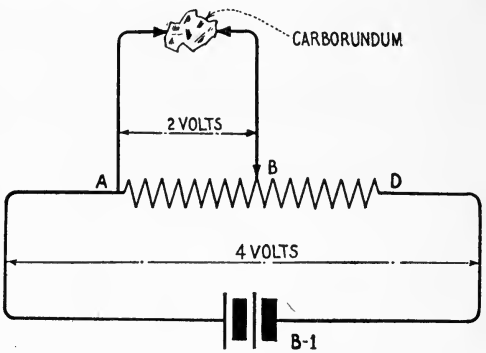

Fig. 154—Connections of Potentiometer for Crystal Detector.

A resistance coil A, D, is connected to the terminals of a 2 or 4 volt battery B-1. The crystal has the variable connection B which is generally a sliding contact. According to the law of divided circuits, *the maximum E. M. F. is maintained across the crystal when B is shifted to the end D, but in the direction opposite or towards A, the E. M. F. gradually reduces to zero.*

In the circuit originally adopted for the carborundum crystal, the potentiometer and detector were connected as in Fig. 153-a, but the modified circuits of Fig. 153-b and Fig. 153-c are also in use. In Fig. 153-b the telephone and potentiometer are *shunted* across the stopping condenser C-3 but in Fig. 153-c the potentiometer is connected in series with the crystal rectifier. Since the resistance of the crystal exceeds that of the potentiometer by several thousand ohms, the resistance of the latter has little effect on the strength of the incoming signal. Although practically equal results are obtained with either connection, the circuit of Fig. 153-b is pointed out by some investigators to be the one which gives the maximum response.

130. Adjustment of the Inductively Coupled Tuner.—During the reception of wireless telegraph signals the inductive receiving tuner may be adjusted to resonance with the sending station in the following manner:

If the *secondary circuit is calibrated* in wave lengths corresponding to various positions of the secondary condenser and inductance switch, and a table of wave lengths supplied,

the *secondary circuit may be set directly to the wave length of the incoming signal, taking care to select large values of inductance and small values of secondary capacity for any particular wave. The secondary winding should then be placed in partial inductive relation to the primary winding, followed by varying the capacity and inductance of the antenna circuit until response is obtained.* This is to be followed by adjusting the sliding contact on the potentiometer and trying new points on the crystal rectifier until the loudest signals are obtained in the head telephone.

Because the capacity and inductance of ships' aerials differ considerably it is evident that *a given primary winding will afford different wave length adjustments with different aerials,* consequently, the primary inductance changing switch cannot be calibrated directly in wave lengths previous to installation. But after the receiver is installed, the primary and secondary circuits both can be readily calibrated by comparison with a wavemeter and the adjustment for any particular wave length quickly duplicated whenever required.

In event that a receiving tuner is *not* calibrated, the receiver can be tuned to a given transmitter in the following manner:

(1) Set the secondary circuit approximately to the required wave length using large values of inductance and small values of capacity;
(2) Place the secondary inductance in close inductive relation to the primary inductance;
(3) Add inductance in the antenna circuit until response is obtained in the head telephones;
(4) Adjust detector to maximum degree of sensibility by potentiometer;
(5) Then reduce coupling between primary and secondary windings;
(6) Try new values of inductance and secondary condenser, also new values in the aerial circuit;
(7) Adjust in this manner for maximum strength of signals or until interference is eliminated.

(a) *Theory of adjustment.* Part of the energy of the oscillations induced in the receiver aerial *is lost by the resistance of the antenna conductors, part by re-radiation of the energy in the form of a wave motion and the remainder through transference to the local detector circuit. The energy imparted to the detector circuit is useful energy* because it produces the response in the head telephone, but the energy extracted in this manner also has a marked effect on the *tuning qualities* of the receiving antenna, which must be taken into account.

This may be explained as follows: If the secondary circuit is coupled loosely to the primary circuit, small amounts of energy will be extracted from the antenna oscillations; hence, the antenna will oscillate with greater persistence and will only respond with freedom to electric waves, the frequency of which coincides with its natural frequency of oscillation. On the other hand, if the primary and secondary circuits are coupled closely, a greater amount of energy will be extracted from the incoming oscillations and they will therefore be damped out more rapidly than under conditions of loose coupling. The receiving aerial will, under these conditions, respond to waves, the frequency of which may be somewhat greater or less than the natural frequency of the aerial circuit.

Thus it is seen that if the two circuits are closely coupled, the receiver circuits will tune "broadly" or if coupled loosely, the circuits will tune "sharply," that is to say, when the receiving transformer coils are loosely coupled, a small change of inductance or capacity will eliminate the signals of a given station, but when the receiver is "tightly" coupled, a much larger change of inductance or capacity will be required to eliminate the signals. This can be stated in another way by saying that the change of coupling between the primary and secondary circuits alters the effective resistance of the antenna and, therefore, has direct influence on the damping of the antenna oscillations.

It has been shown by several investigators that maximum response is obtained in a receiving apparatus so adjusted that the resistance of the primary and secondary circuits are equal and since the effective resistance of any receiving system varies widely according to the design of the aerial, the earth plate resistance and the type of receiving apparatus, it is clear that *some particular degree of coupling of the tuner will give the maximum response in the head telephone.*

The *two circuit receiver* with *inductive coupling* permits the receiving operator to eliminate the signals from interfering stations; in fact by judicious adjustment (of the coupling) signals of the same wave length can be eliminated provided they have different decrements. *Generally an advancing wave of feeble decrement permits the primary and*

secondary circuits to be loosely coupled and conversely a highly damped wave requires the receiver circuits to be closely coupled.

The antenna circuit at any receiving station can be made to tune more sharply by connecting a variable condenser in series and adding inductance until the wave length adjustment for resonance is obtained. This decreases the natural decrement of the receiving aerial but generally results in decrease of the strength of signals but the loss of signal strength is more than compensated for by the degree of selectivity obtained.

The *sharpest tuning* or the highest degree of selectivity is obtained in the local detector circuit when the variable condenser in shunt to the secondary winding is worked at small values of capacity with correspondingly large values of inductance for a given wave length; but if loose coupling is employed greater values of capacity and lesser values of inductance may increase the selectivity.

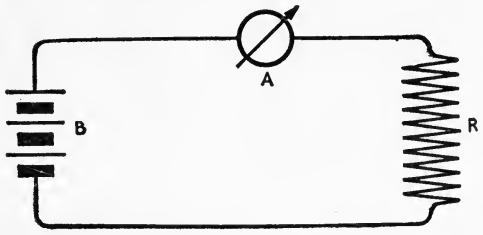

Fig. 154a—Circuit for Determining Volt-ampere Characteristic of a Given Conductor.

As will be seen from the foregoing explanations, interference can be prevented at the receiving station: (1) *by employing loose coupling between the primary and secondary windings;* (2) *by inserting a condenser in the antenna circuit and adding inductance until resonance is secured for a given wave length.*

Irrespective of the selectivity obtained by radio-frequency tuning, spark transmitters having *different spark notes* tend to prevent interference. By skill obtained through practice, the receiving operator can pick out a spark note of particular pitch and translate the signals through the interference of one or more stations, the more so if the spark note of the station desired has a distinctive pitch. Occasionally interfering stations can be tuned out by *detuning* the closed and open circuits, but signals will only be received in this way when the receiving station is situated near to the transmitting station.

131. The Action of the Carborundum Crystal.—Before proceeding with an explanation of various detectors and the circuit best adapted to their operation, we will briefly consider a generally accepted explanation of the operation of the carborundum detector and the function of the local battery current during the reception of radio signals.

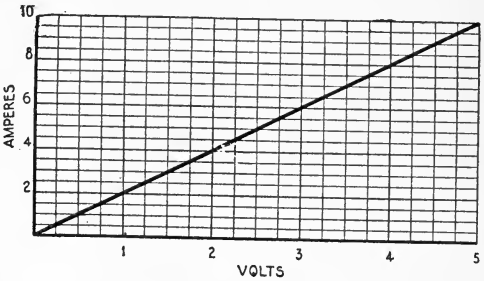

Fig. 155—Characteristic Curve of Ordinary Resistance.

The student is now aware that if we have a circuit such as shown in Fig. 154a, consisting of a variable source of direct current B to which is connected a resistance R and an ammeter A in series and if the voltage at B is progressively increased, the flow of current as indicated by the ammeter, increases in the direct ratio in accordance with Ohm's law. Furthermore, if we plot the results of this experiment in the form of a graph on cross section paper, as in Fig. 155, we find that a line drawn common to all co-ordinate points located in accordance with the data, will be straight and uniform. *Let it be noted from this curve that if the voltage be doubled, the current is doubled and so on.*

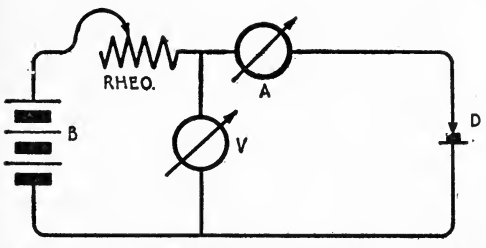

Fig. 156—Apparatus for Determining Volt-ampere Characteristic of Carborundum Rectifier*

Now if we substitute for the resistance R a crystal of carborundum D as in Fig. 156, we find first, that the current in one direction with a given impressed voltage is much greater than when passed through the crystal in the opposite direction and second, that if the current flows in the

direction of best conductivity and the voltage again progressively increased, the results do not accord with Ohm's law as the curve, Fig. 157, clearly indicates, e. g., the current is not proportional to the voltage. It will be seen that in the first part of the curve a progressive increase of voltage does not cause much increase in current, but after a certain critical voltage is passed the current increases more rapidly. The resistance of the crystal is, therefore, not steady. A curve of this type is said to have a *rising characteristic.*

We may now assume this curve to apply to the detector circuit of Fig. 153a and that signals are being received from a given station. Let the E. M. F. of the battery be three volts. From the curve, Fig. 157, we note that the corresponding current is 6 microamperes. Now let the alternating current of radio-frequency (the incoming signal) have for purposes of illustration a potential of one volt and let it be superposed upon the battery current flowing through the crystal. Then in one direction 1 volt will be added to 3 volts and from the curve, the current corresponding to 4 volts is 16 microamperes. But when the alternating current flows in the opposite direction it opposes the local battery and the resultant E. M. F. is 2 volts. Reading from the curve we obtain a current value of 2.5 microamperes.

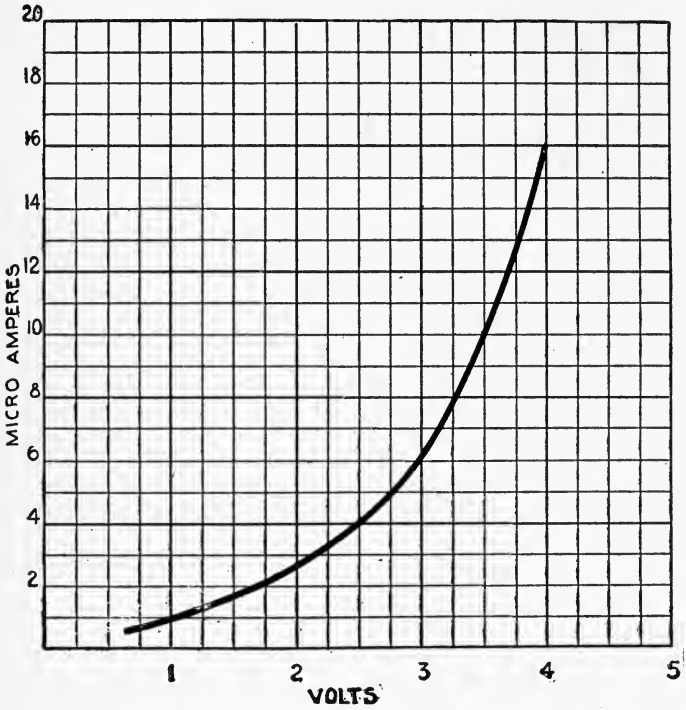

Fig. 157—Characteristic Curve of Carborundum Rectifier.

It will thus be seen under the influence of the impressed alternating E. M. F. that the current in the local battery circuit varies between 2.5 and 16 microamperes, but the sound produced by the head telephone, as will be explained, is proportional to the difference between the *normal current* flowing through the crystal and the *average value of current* flowing when an external oscillating voltage is applied. This, perhaps, can be more clearly explained by means of the curves shown in Fig. 157a, where the effect of superposing the antenna oscillations on the local battery current over the duration of a single train of incoming oscillations is shown.

As shown in Fig. 157, the normal current flowing through the head telephone, when no oscillating voltage is applied, is 6 microamperes (the voltage of the battery being 3 volts), but when an oscillating current of 1 volt is added on that of the local battery, the maximum amplitude of the initial oscillation (Fig. 157a) in the wave train is 16 microamperes, and, of course, successive maxima will be of lesser amplitude according to the decay of the wave train (as shown by the series of decaying maxima). We see also that the successive reductions of the normal battery current (shown below the line A, B) are relatively small because, as shown in Fig. 157, for all voltages less than 3 volts the flow of current (in microamperes) through the local circuit is relatively weak. The result of this is seen to be a series of positive maxima of gradually decreasing amplitude to which the telephone diaphragm cannot respond individually but which produce an *average effect* in the receiver. The average current in the case of Fig. 157a may be considered for mere illustration to be 9 microamperes and the difference between the normal current 6 microamperes and the average current 9 microamperes (or 3.5 microamperes) is the current

which produces audible sound in the receiving telephone. We may state the foregoing in another way by saying that the added voltage due to the oscillating E. M. F. being im-

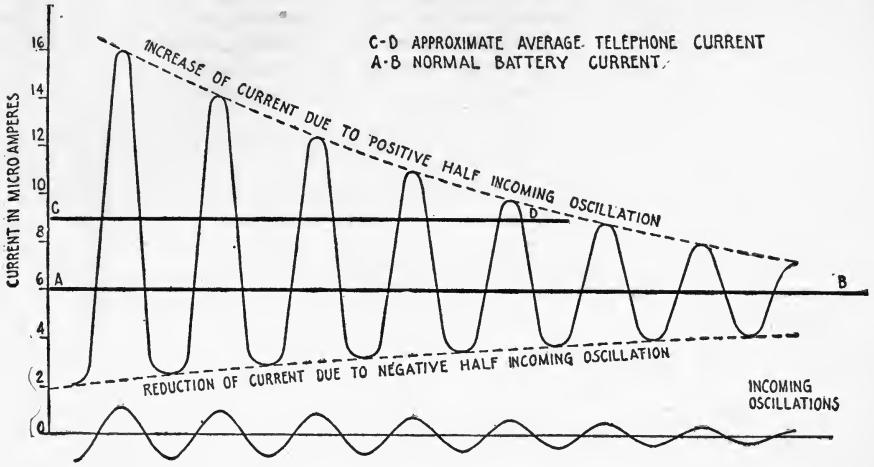

Fig. 157a.—Curves Showing the Fluctuations of the Local Battery Current flowing through the Carborundum Rectifier during the Reception of Signals.

pressed upon the crystal is greater than the subtracted voltage and that the final effect of this is an increase of current through the head telephone circuit over the duration of one wave train.

From the foregoing explanation it is apparent that when an operator at a given receiving station adjusts the position of the sliding contact on the potentiometer for maximum signals, *he adjusts the flow of current through the crystal and head telephone to correspond to the critical point on the characteristic curve,* or, in other words, to that point on the curve where the superposition of a slight antenna E. M. F. upon the local E. M. F. causes a relatively large change in the strength of the local battery current. And it also follows that the steeper the characteristic curve of a given crystal, the greater will be the change of current for a given impressed alternating voltage. In other words, the crystal with a steep curve will give the loudest signals and is said to be *"more sensitive"* to incoming oscillations.

132. Adjustment of Crystal Detectors.—No specific rule for locating the sensitive spot on a crystal rectifier can be laid down; in fact, the pressure and position of the opposing contact for maximum signals can only be determined by experiment. *Car-*

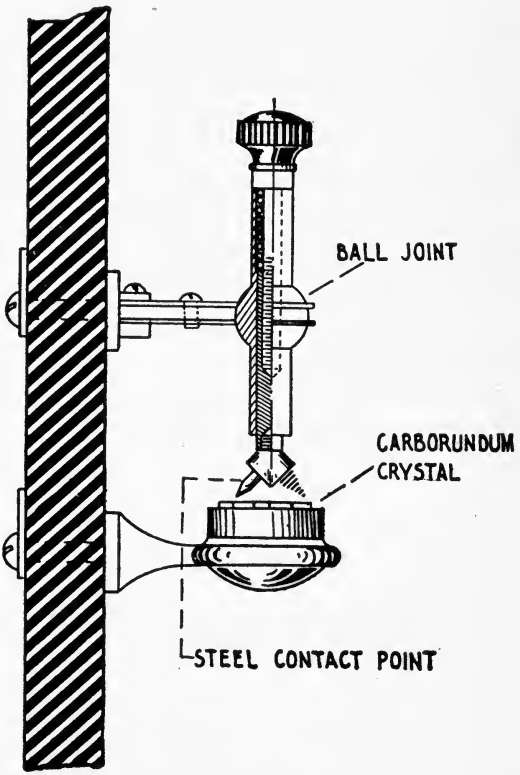

Fig. 158—Carborundum Detector Complete.

borundum crystals as a whole require greater pressure at the opposing contact than crystals of galena, silicon, etc., although certain crystals under observation have required exceedingly light contact pressure. *With all crystals employing a local battery, it is important that the local current flow in a certain direction and that its strength be carefully regulated.* This means in practice that either the connections to the battery must be reversed, or the crystal must be turned about in the holder and left at the position in which the loudest signals are obtained from a given sending station. The potentiometer, of course, must be adjusted simultaneously.

The circuit of Fig. 153-b is suitable for the *zincite-bornite detector* provided a fixed resistance of about 2,000 ohms is connected in series with the battery B-1 and the potentiometer P-1. Certain crystals of this combination respond better with a local battery while others do not require it, but with practically any crystal it aids at least in obtaining the sensitive adjustment to employ a local battery, e. g., the sensitive spot can be more quickly located.

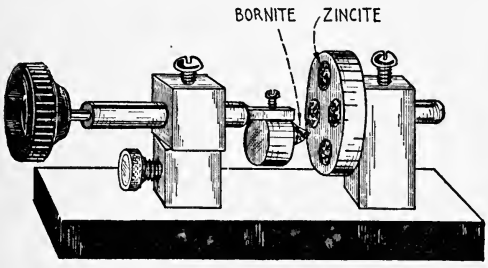

Fig. 159—The Zincite Bornite Detector.

If the test buzzer to be described further on is employed, a crystal can be adjusted to sensitiveness whether or not the distant transmitter is in operation.

133. Detector Holders.—Two types of crystal holders appear in figs. 158 and 159. The first is suitable for the carborundum crystal which is mounted in a small brass cup with some form of soft metal such as Wood's metal. A small point, such as a steel phonograph needle, is mounted on the movable arm and makes contact with the crystal. During adjustment this point is *"jabbed in"* at various points on the crystal until a sensitive spot is located.

A *detector holder* suitable for the zincite-bornite detector is shown in Fig. 159. The large cup is filled with 5 or 6 *zincite* crystals while the opposite cup carries a crystal of *bornite*. The cup is fastened to the end of the arm with the universal joint. The crystal of bornite may thus be placed in contact with the surface of any of the zincite crystals being shifted from one to the other until the adjustment for maximum strength of signals is found.

A variety of crystals holders have been designed for crystals of *galena, silicon, cerusite,* etc. One type appears in Fig. 160, where the crystal is held in a small cup by three screws. A light wire contact mounted on the movable arm bears with slight pressure on the surface of the crystal.

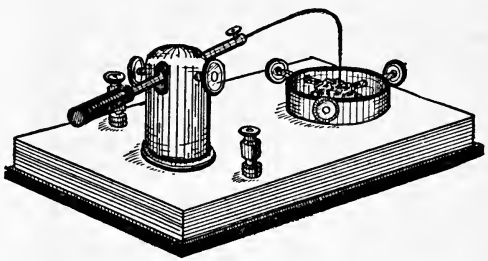
Fig. 160—Detector Holder for Galena and Silicon Crystals.

134. Classification of the Receiving Detectors.—The receiving detectors of wireless telegraphy differ greatly both in point of mechanical construction and mode of operation, and, in addition, they possess widely varying degrees of sensitiveness. Certain types, for instance, are *highly sensitive* to electrical oscillations but are difficult to keep in permanent adjustment; others are *less sensitive* but possess *marked degrees of stability.* Still others are in the nature of a compromise and may occupy approximately a position midway between the two extremes.

Some receiving detectors rely upon the *principal of rectification* (as we have already shown) and will convert an *alternating current of radio-frequency to a uni-directional current;* others have the property of rectification combined with the *ability to vary a local source of battery current* in a manner much similar to the working of an ordinary telegraph relay. The operation of certain other detectors is based upon the *influence of electrical oscillations upon magnetized iron* or

upon the ability of these oscillations to cause certain *granulated metals to cohere.*

Perhaps the most highly developed of all receiving detectors are the *vacuum tube rectifiers* which are extremely sensitive and possess the important property of amplifying the signals when connected in cascade. Certain types of vacuum amplifiers will remain in a sensitive state of adjustment over an indefinite period or throughout their length of life.

It should be kept in mind that the most sensitive receiving detector is not always the one most convenient or the most practical for commercial use. For instance, extremely sensitive amplifying detectors may require intricate apparatus, having so many points of adjustment that its manipulation may call for the services of a highly skilled engineer and further the circuits may be of such a type that the apparatus cannot be quickly changed from one wave length to another. In event of the latter, the tuner would be of little value for marine service which requires the receiver to be one capable of quick adjustment to land stations operating at various wave lengths. Furthermore, extremely sensitive detectors bring in a certain amount of interference from far distant stations which would not be heard on less sensitive detectors.

The most practical detector for commercial working is one that combines a fair degree of efficiency with ruggedness and stability of adjustment, and so far among the crystal detectors none has, in this respect, excelled the carborundum rectifier. The Marconi magnetic detector is universally recognized as being the most stable and "foolproof" of all receivers but it lacks sensitiveness on the shorter waves. The vacuum valve detectors, on the other hand, are considered to be the most sensitive among commercial receivers, but they possess the disadvantage of requiring complicated circuits for best results.

To impress upon the reader's mind the *utility* of the various types of receiving detectors, we may classify them under five general headings. Under the first heading we may name the *detectors which require no local battery* and under the second heading, *those detectors* in which the response in the telephone depends upon the *application of a local battery current* as well as upon the current of the incoming oscillations.* Certain detectors may be classified under both headings because they may function to some extent with or without a local battery.

In addition we may note under a third heading the detectors considered as *rectifiers of radio-frequent* currents and in a fourth and fifth headings, those suitable for *response to either damped or undamped oscillations* respectively. It is to be noted that a few types come under all headings.

Detectors Functioning Without Local Battery.	Galena—Silicon—Zincite Bornite—Carborundum (satisfactory for short distance receiving)—Fleming Valve (filament battery only).
Detectors which depend upon the combined effects of received energy and local battery current.	Carborundum—Zincite Bornite (sometimes used with local battery)—Fleming Valve (with local battery)—Three Element Valve—Silicon.
Detectors having the Property of Rectification.	Galena — Silicon — Carborundum — Cerusite—Zincite-Bornite—Fleming Valve—Three Element Valve—Electrolytic.
Detectors of Damped Oscillations.	Galena — Silicon — Zincite Bornite — Carborundum —Fleming Valve—Three Element Valve—Marconi Magnetic—(Tikker, Tone Wheel and Heterodyne system will give some response from spark transmitters, but are not satisfactory for such reception).
Detectors of Undamped Oscillation.	Tikker—Tone Wheel—Heterodyne Receiver—Vacuum Valve Oscillator.

135. Fleming Valve Detector and Tuning Circuits.—A receiving detector of notable merit is the Fleming oscillation valve the action of which is primarily

* We should be careful to distinguish between oscillation detectors requiring a "local battery" and requiring a local "source of energy." For example, the Tikker, the Tone Wheel and the Marconi Magnetic detectors require a local driving force, which in reality take the place of the local battery; also the Heterodyne receiver requires a local source of radio-frequent currents upon which the response in the receiver depends as well as the current induced in the receiver aerial.

based on the emission of *electrons* from highly heated metals in vacua. In its commercial form it consists of a highly exhausted glass bulb, Fig. 161, containing a 4 or 12 volt lamp *filament, F, of carbon, platinum or tungsten surrounded by a metal plate or cylinder P-2 of copper, nickel, etc.,* from which a connection is extended to the outside of the bulb.

When the filament is brought to a state of incandescence by a battery B, negative electricity can pass from the filament to the plate, but not in the opposite direction, hence when the terminals of the closed or secondary circuit of a receiving tuner are connected to the negative side of the filament and to the plate of the valve, the alternating current of radio-frequency flowing in the receiver circuits will be converted into a uni-directional current which may affect a head telephone or other recording instrument. More clearly, the oscillations flowing in the receiver circuits during the time of a complete group will be rectified by the valve placing a charge in the condenser C-2 (Fig. 161), which afterwards discharges through the head telephone, creating a single sound for each group.

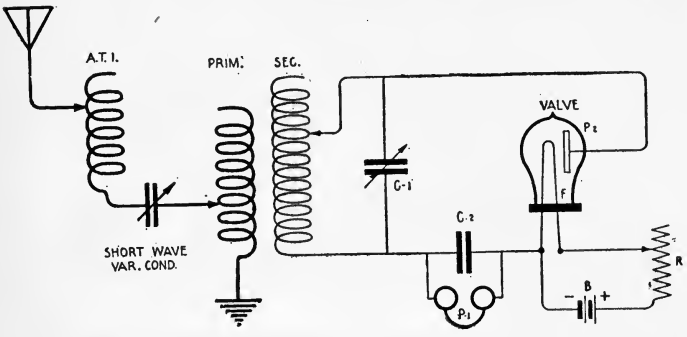

Fig. 161—Fleming Oscillation Valve and Tuning Circuits.

The *adjustment of the Fleming oscillation valve* is extremely simple and the stability of the device particularly marked, in fact it is only necessary to adjust the incandescence of the filament until loud response from a given station is obtained in the head telephones. This is accomplished by the rheostat R which normally is of 10 or 15 ohms resistance.

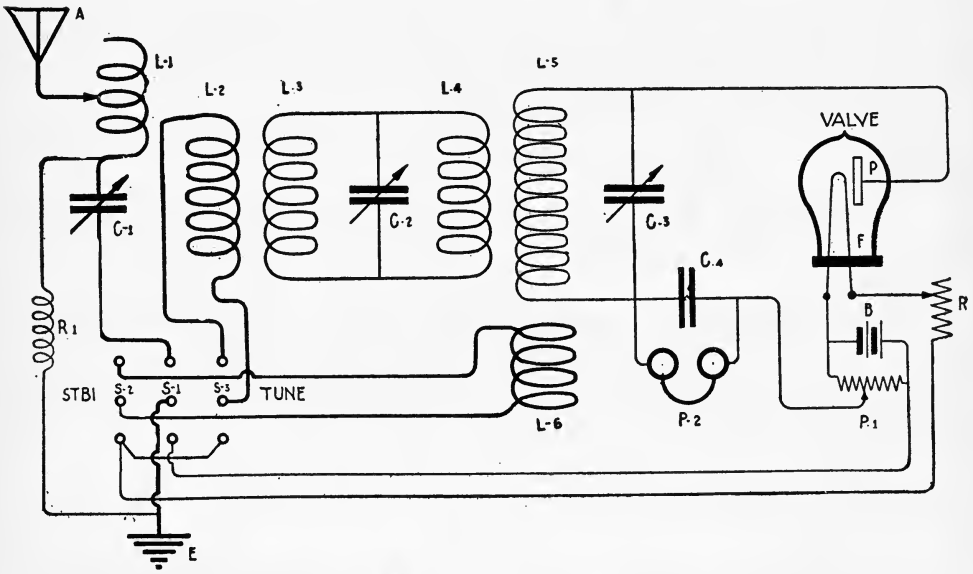

Fig. 162—Fundamental Circuit of Marconi Valve Tuner.

The Fleming valve gives signals of greatest strength when the secondary circuit is designed for a minimum value of shunt capacity and a maximum value of inductance for a given wave length or frequency, hence the secondary condenser is always worked at low values of capacity.

Many valves are more sensitive if an added potential is applied between the filament

and the plate. Like the carborundum detector, the Fleming valve has a rising characteristic and when an E. M. F. is applied to the space between the plate and the filament the current may be adjusted to the critical point on the characteristic curve so that the addition of a slight antenna voltage causes a large increase of the local battery current flowing through the head telephones.

A satisfactory diagram appears in Fig. 162 wherein a potentiometer P-1 is shunted across the filament battery and a portion of the current flows through the head telephones and the detector. With this arrangement of circuits advantage is taken of the particular volt-ampere characteristic of the valve and a relay action due to a local source of energy is obtained. For the maximum strength of signals with this circuit it is necessary to adjust the position of the sliding contact on the potentiometer as well as the incandescence of the filament, until the desired results are obtained.

The diagram, Fig. 162, shows the fundamental circuit of the widely used *Marconi-Fleming valve receiver.* The *open circuit* comprises:

(1) The aerial tuning inductance L-1,
(2) The short wave condenser C-1,
(3) The primary winding L-2,
(4) The shunt impedance R-1,
(5) The change-over switch S-1, S-2, S-3.

The *intermediate circuit* comprises:

(1) The winding L-3 in inductive relation to L-2,
(2) The winding L-4 in inductive relation to L-5,
(3) The variable condenser C-2.

The *secondary circuit* comprises:

(1) The secondary winding L-5,
(2) The billi condenser C-3,
(3) The Fleming valve F, P,
(4) The battery B (or four volts generally),
(5) The 10 ohm rheostat R.
(6) The 400 ohm potentiometer P-1,
(7) The fixed condenser C-4,
(8) The head telephone P-2.

Inductances L-2, L-3, L-4, L-5, L-6 are of fixed value, but L-1 is variable through the medium of a multi-point switch.

When the D. T. three blade switch S-1 is thrown to the right, primary winding L-2 is connected in series with the *aerial circuit* which brings the *intermediate circuit* into use, but the switch, thrown in the opposite direction, disconnects L-2 and connects L-6 in series with the aerial. L-6 being wound tightly about the turns of L-5, the open and closed circuits are closely coupled. *This increases the damping of the receiving system* and makes the set responsive to waves of different length at one set of adjustments, but, of course, does not give the strength of signals that can be obtained by resonant adjustments.

The position of the switch corresponding to *"close coupling"* is marked "Stdbi," an abbreviation for the word "standby." The switch is placed in this position when a particular receiving station awaits a call from one of several sending stations which are not exactly tuned to the same wave length.

In the opposite position, the changeover switch is marked *"tune"* and with the circuits

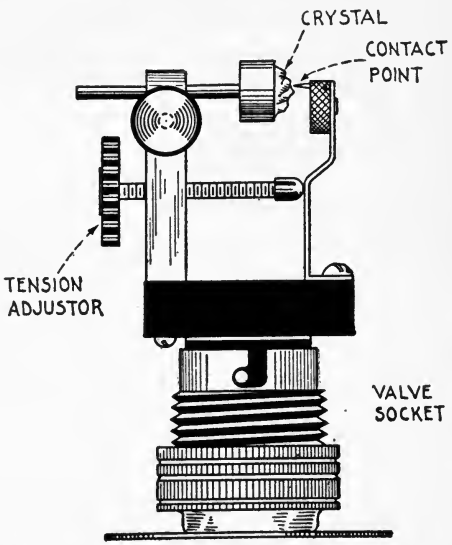

Fig. 163—Carborundum Crystal Holder to Fit Fleming Valve Socket.

of this connection, sharp resonant adjustments can be obtained. The wave length of the *intermediate circuit* is increased or decreased by the variable condenser C-2 only and similarly the wave length of the secondary or detector circuit, by the condenser C-3.

The coupling between the inductances of the intermediate circuit and inductively related coils is varied simultaneously by means of a shaft (and knob) upon which both coils, L-3 and L-4, are mounted.

The impedance coil R-1 prevents the accumulation of high voltages upon the dielectric of the variable condenser, which may be punctured in case the windings of the tuner should come in direct contact with the high voltage wires of the transmitting apparatus.

The American Marconi Company has developed a crystal holder to fit in the Fleming valve socket as shown in Fig. 163. The circuit for the crystal detector is practically identical with that of the oscillation valve with the exception that the lighting battery is connected to the potentiometer instead of to the lamp filament.

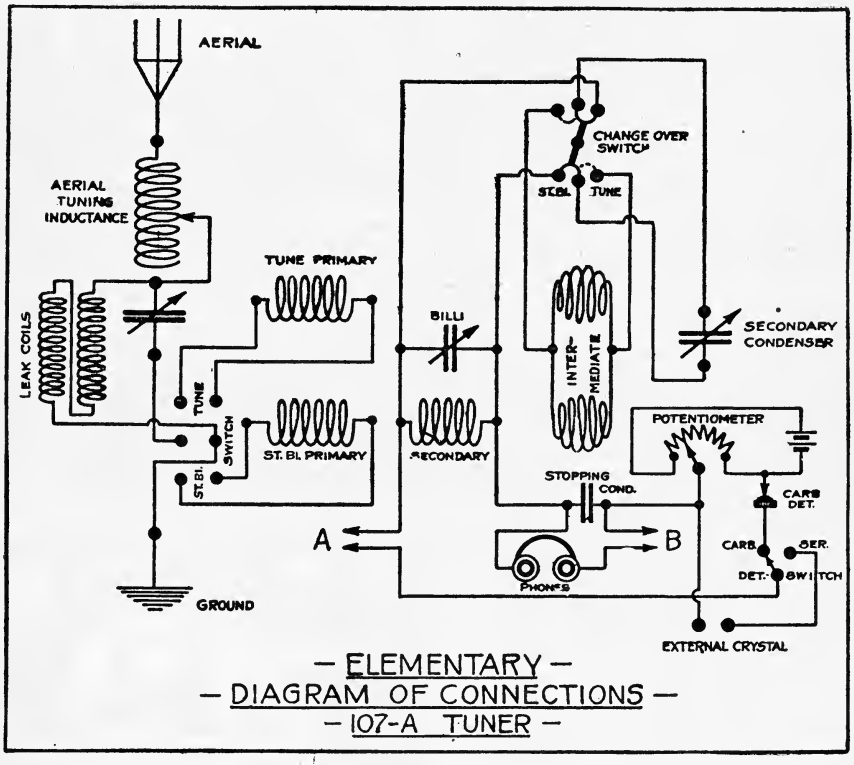

Fig. 164—Complete Circuits of Type 107a Tuner (American Marconi Company).

The valve tuner was original designed to be responsive to waves varying between 300 and 1,650 meters in length, but the circuit has been modified to respond to waves up to 2,500 meters, as in Fig. 164.

136. Marconi Type 107-a Tuner. (American Marconi Company).—The various connections and arrangements of circuits of the Marconi type 107-a tuner are shown in Figs. 165-a, 165-b and 165-c. The principal change over the ordinary valve circuit lies in the special six point double throw switch (marked *"change-over switch"*) which disconnects the condenser of large capacity (.01 microfarads) across the *intermediate circuit* and places it in shunt to the secondary winding and the *billi-condenser* (see Fig. 165-a). With the increased capacity of this condenser in shunt, the secondary circuit will respond to a wider range of wave lengths than the original design of the tuner would permit.

For the reception of wave lengths exceeding 1,500 meters, the D. P. D. T. switch is thrown to the *"standby"* position and the intermediate circuit cut out. For wave lengths below 1,000 meters, either the *"standby"* or *"tune"* circuits can be employed at the discretion of the operator.

It is to be noted, although the 107-a tuner is designed for the carborundum detector, an extra set of posts is provided for an additional crystal such as

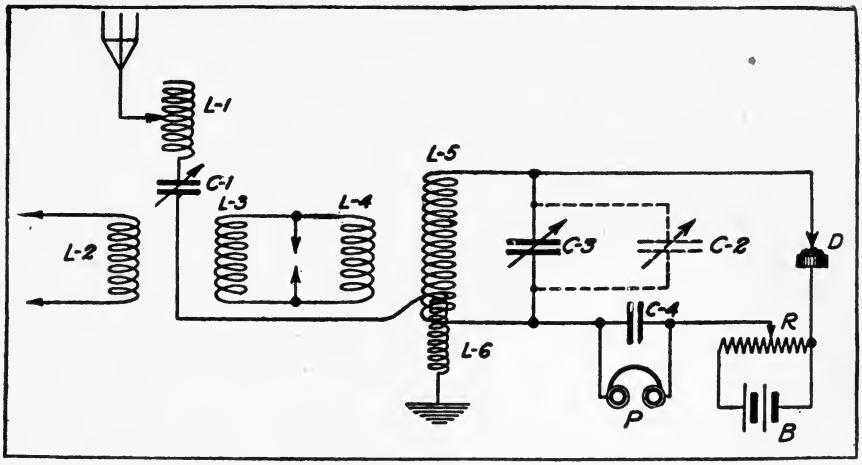

Fig. 165a—"Standby" Long Wave Adjustment of Marconi Type 107a Tuner.

cerusite. When the latter detector is employed, the potentiometer is out of the circuit. Observance next should be made of the binding posts from which wires are connected to the receiver circuits and to the contacts of an aerial change-over switch. The latter, when open, protect the detector and head telephones from the induced potentials of the local transmitter.

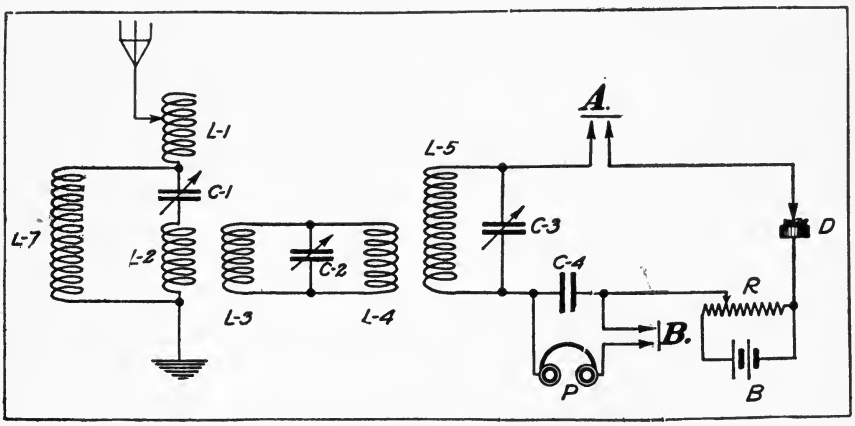

Fig. 165b—"Tune" Circuits of Type 107a Tuner.

In the diagram, Fig. 165-b, L-1 is the aerial tuning inductance, the value of which is altered by means of a multi-point switch mounted on the left hand front of the tuner.

C-1 is the short wave variable condenser connected in series with the aerial system. In the full scale position it short circuits itself and is thus cut out of the antenna circuit. This condenser is mounted on the left hand side on the top of the tuner.

L-2 is the primary winding of the receiving tuner and has a fixed value of inductance (not variable).

Coil L-3, condenser C-2, coil L-4 comprise the intermediate circuit. L-3 is of fixed value and is in inductive relation to L-2. L-4 has the same dimensions as L-3, but it is in inductive relation to coil L-5.

The wave length of this circuit is varied by means of a condenser C-2.

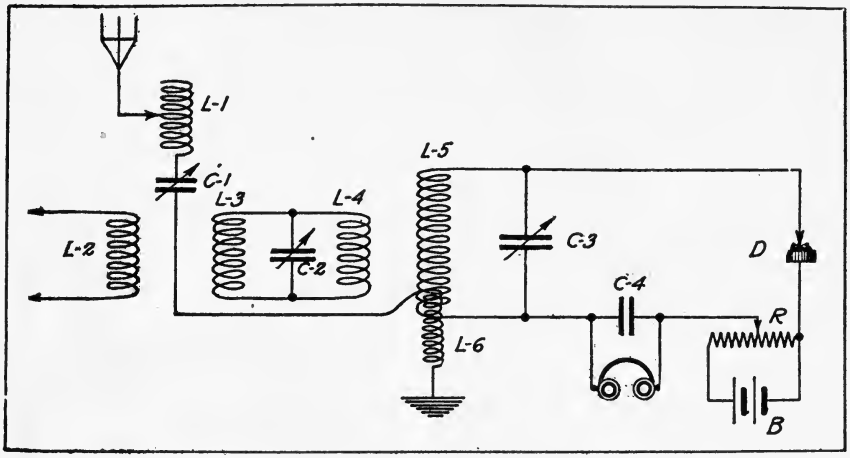

Fig. 165c—"Standby" Short Wave Circuits of 107a Tuner.

Coils L-3 and L-4 are wound on balls or spheres, mounted on a shaft so they can be turned at a right angle to L-2 and L-5, simultaneously. This is effected by means of the coupling knob mounted on the right hand end of the tuner, and thus the coupling between the intermediate circuit and the antenna and detector circuits is varied as required.

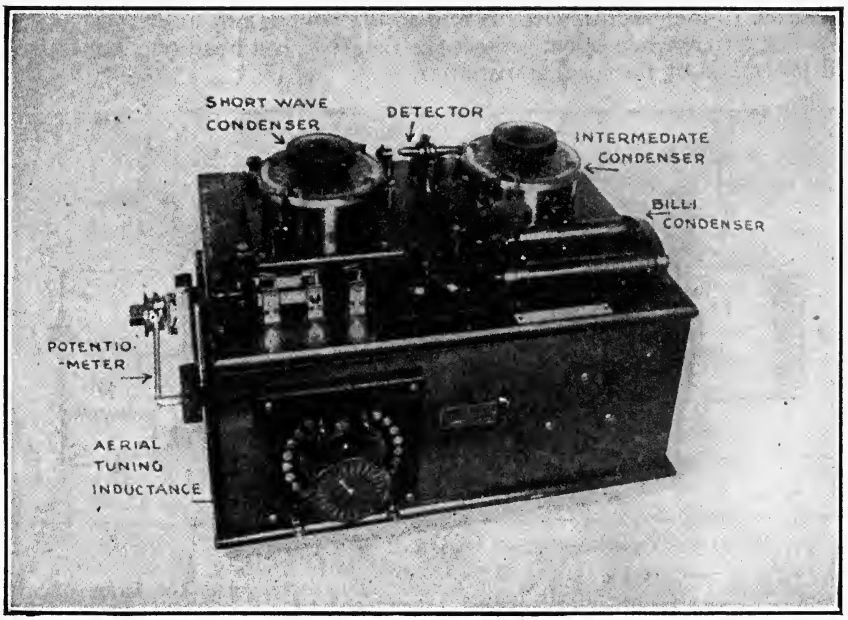

Fig. 166—Type 107a Tuner (Modified Valve Tuner).

Coil L-5 and condenser C-3 constitute the secondary circuit. L-5 is of fixed value and C-3 is the well known "billi" condenser, having a value of about .0001 microfarad.

C-4 is the telephone condenser of approximately .003 microfarad capacity.

R is a sliding contact potentiometer of 400 ohms, mounted on the left hand side of the tuning box.

B is a dry cell battery of 1.5 to 3 volts, while D is the usual carborundum crystal.

The inductance coil, L-7, is an inductive static leak for preventing the accumulation of large static charges upon the plates of the short wave variable condenser to prevent the rubber dielectric from puncturing.

During adjustment of the carborundum crystal, the connection from the battery to the potentiometer must be reversed until the best response is obtained.

The intermediate circuit of either of the foregoing tuners is employed in case of excessive interference from nearby stations. Of course it is difficult to distinguish between stations operating on the same wave length except as the signals from the desired station are very much louder than those from the interfering station; but transmitters operating on the same wave length and having different degrees of damping can often be tuned out or in by proper adjustment of the coupling.

It will be apparent from the preceding diagrams that either the valve or the 107a tuner is tuned to resonance with the incoming signal by condensers only, with the exception of the aerial tuning inductance which is variable in steps through a multipoint switch. A photograph of the 107a tuner appears in Fig. 166. In adjusting this tuner, the following general instructions should be observed:

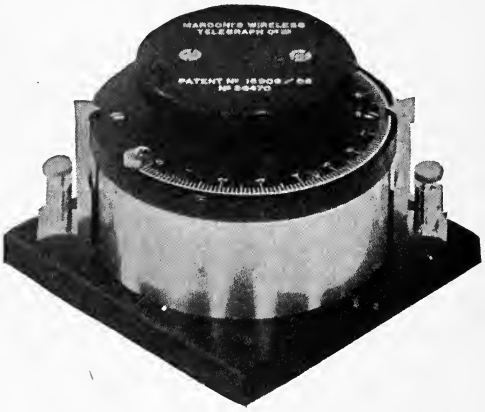

Fig. 166a—Marconi Disc Variable Condenser.

(a) *Operation.* With the connection ("Tune") indicated in Fig. 165b *the tuning is extremely sharp* and the circuits will not respond to *wave lengths in excess of* 1,000 *meters.*

For general work the coupling knob is set at 90°. The billi condenser is set at the zero position on the scale and one or two points of the aerial tuning inductance connected in the circuit. The setting of the intermediate condenser, C-2, is altered until response is secured.

Correct setting for the potentiometer is obtained by means of a buzzer tester or by listening to the signals of a distant station. Follow this by reversing the connections from the battery to the tuner until the loudest signals are obtained.

For tuning to waves up to 1,000 *meters,* three or four points of inductance should be added at the aerial tuning inductance, but for the wave lengths shorter than 600 meters, the short wave condenser should be used at smaller values of capacity.

The billi condenser permits the detector circuit to be tuned to waves from 450 meters to 1,000 meters in length.

(b) *"Stand-by" Position.* When the double throw knife blade switch is thrown to the left—*"stand-by" position*—the circuits are altered as in Fig. 165c. With this connection the primary winding L-2 is disconnected from the antenna circuit and a second primary winding, L-6 connected instead.

L-6 is an inductance of fixed value wound tightly around the winding L-5, giving a close degree of coupling between the aerial and detector circuits.

From the diagram it will be plain that coil L-4 of the intermediate circuit is still in inductive relation to L-5 and unless the precaution is taken to turn the coupling knob to the zero position, considerable energy will be absorbed from the detector circuit, thereby reducing the strength of the incoming signals, particularly if the intermediate circuit is in resonance with the antenna and the detector circuits.

For tuning to waves up to approximately 1,000 meters with the "Stdbi" connection, only the billi condenser is employed in shunt to the secondary winding, but for longer wave lengths the small six-point, double throw switch, mounted on the top of the tuner (marked change-over switch in Fig. 164), is placed in the "Stdbi long wave" position, whereupon the intermediate condenser, C-2, is connected in shunt to the billi condenser C-3. This connection permits waves in excess of 3,000 meters to be adjusted to in the secondary circuit.

The complete circuit for this connection is indicated in Fig. 165a. Note carefully that the intermediate circuit is *not* employed. It is important to note also that the type 107-a tuner is fitted with four binding posts (at the rear) from which connections extend to the type S aerial changeover switch. When the antenna switch is placed in the transmitting position, the circuits of the 107-a tuner are interrupted at the points A and B (Fig. 165b), thus breaking the circuit to the detector and the head telephones. The contacts at this switch must have careful inspection from time to time, for, unless they close properly, the apparatus positively will not function.

Should these contacts be broken, a permanent jumper should be placed across the binding posts to keep the circuit closed.

Type 107-a tuner should be used with the type S or type I aerial changeover switches only.

The complete circuits for the tuner are shown in detail in Fig. 165a and with the foregoing explanation, the functions of the various elements should be clear without further instruction.

(c) *General Instructions.* For *"stand-by" tuning or broad adjustment* at wave lengths up to 1,000 meters (see Fig. 165c), place the double throw knife switch to the left.

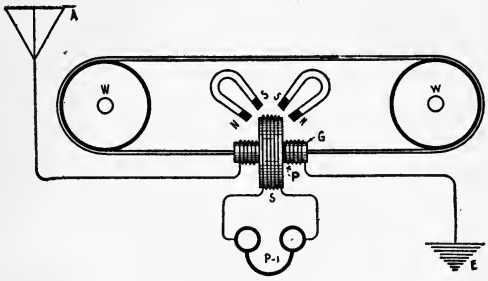

Fig. 167—Marconi's Magnetic Detector.

Set the condenser switch on "tune." Set the coupling knob at zero. Carefully adjust the billi condenser. Connect in a few points of the aerial tuning inductance. Vary the capacity of the short wave condenser.

For long wave lengths (in excess of 1,000 meters) place the condenser switch on "stand-by long wave" position. Vary carefully the capacity of the intermediate condenser. Add inductance at the aerial tuning inductance.

For *sharp tuning on the shorter wave lengths* (below 1,000 meters), place the double throw knife switch to the "tune" position. Place the condenser switch on the "tune" position. Set the coupling knob at from 70° to 90°. Adjust carefully the intermediate condenser. Add two or three points of inductance at the aerial tuning inductance. Follow this by variation of the capacity of the short wave condenser. In this position, all the variable elements of the complete tuner are in use.

137. Marconi Magnetic Detector and the Multiple Tuner Circuits (English Marconi Company).—The magnetic detector shown diagrammatically in Fig. 167 is an oscillation detector of unvarying stability. A description of the detector and an explanation of its functioning follow:

A continuous *band* made up of a group of fine *iron wires* revolves on the *ebony grooved wheels W* which are turned by clockwork in the base of the instrument. The band passes through the *glass tube* G, which has a small single layer of fine wire comprising 6 to 10 turns through which the radio-frequent oscillations flow. Directly over this winding is placed the *small bobbin of wire S* which has approximately the resistance of the head telephones P-1. Two *horseshoe permanent magnets* with like poles adjacent are mounted immediately above the tube and near to it. Some argument exists concerning the action of this detector during the reception of signals but it is sufficient to say that when the iron band passes underneath the two permanent magnets it undergoes a cyclic change in magnetism and is extremely sensitive to an impressed external magnetic field such as that generated by a radio-frequent current flowing through the winding G.

When electrical oscillations induced in a receiver aerial by a distant transmitter pass through the winding P, one complete group of oscillations sets up an alternating magnetic field which causes a single movement or a change in the position of the flux in the iron band. The bobbin S being in the path of the flux, it is acted upon inductively, a current being induced in the windings which flows through the head telephone creating a single sound for each group of incoming oscillations. The note of the transmitter is faithfully reproduced, because each group of oscillations radiated by the transmitter has a cumulative effect on the change of flux in the iron band, which causes a single movement of the telephone diaphragm. Although the magnetic detector lacks the sensitiveness of the crystal

detector throughout the shorter range of wave lengths, as between 300 and 600 meters, for waves around 2,500 meters, it compares favorably with the most sensitive crystal rectifiers.

The magnetic detector may be connected directly in series with the aerial system, but it functions best in the circuits of the Marconi Multiple Tuner (English Marconi Company) in Figs. 168 and 169.

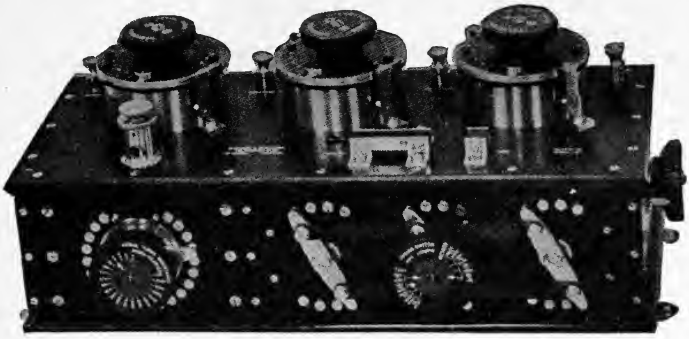

Fig. 167a—Marconi Multiple Tuner.

In general, the circuits of this tuner appear similar to that of the valve tuner, but the secondary winding for the magnetic detector has very few turns as compared with the secondary of the valve tuner. The magnetic detector has low resistance compared with crystal detectors and, in consequence, the stopping condenser of the usual detector circuit becomes an active element of the closed oscillation circuit and must therefore be of variable capacity. In fact, placing the detector in series with the secondary circuit not only calls for a winding of low inductance but one of low resistance as well. Hence the secondary coil is usually wound with rather coarse wire, such as No. 18 or No. 20 B. and S.

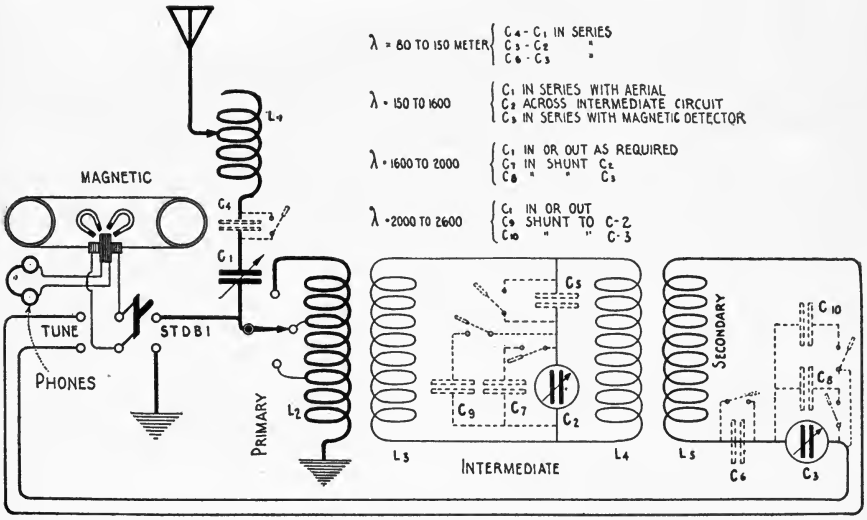

Fig. 168—Fundamental Circuit Marconi's Multiple Tuner.

A fundamental wiring diagram of the Marconi multiple tuner appears in Fig. 168 and a more detailed diagram showing approximately the position of the apparatus in the tuner in Fig 169. Like notations are used in both drawings.

Since this tuner is adjustable to wave lengths between 80 and approximately 3,000 meters, a specially constructed series of multi-point switches S-1, S-2 and S-3 (Fig. 169) control the inductance and capacity of the primary, intermediate and secondary circuits for a progressive increase or decrease in wave length. The particular wave length adjustment corresponding to any position of the switch is clearly marked on the operating handle.

When the small D. P. D. T. switch is placed in the "standby" position, the magnetic detector is connected directly in series with the aerial and the necessary tuning adjustments are made at inductance L-1 and condenser C-1, but when this switch is thrown to the "tune" position, the aerial circuit continues through the primary winding L-2, the oscillations being transferred from thereon to the intermediate coil L-3, built up in amplitude by condenser C-2 and finally transferred to L-5 by induction from L-4.

The function of the switches S-1, S-2 and S-3 will be clear from the drawings and the following explanation, describing the connections of the various fixed and variable capacities for the complete range of wave lengths.

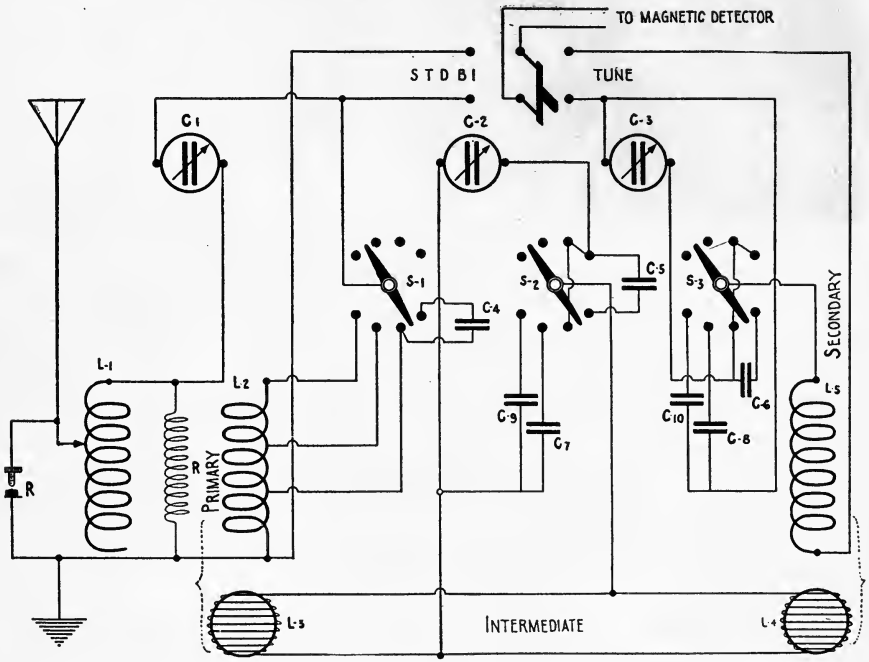

Fig. 169—Detailed Wiring Diagram of Multiple Tuner.

For wave lengths from 80 to 150 meters.
- Condensers C-4 and C-1 are in series.
- Condensers C-5 and C-2 are in series.
- Condensers C-6 and C-3 are in series.

For wave lengths from 150 to 600 meters.
- Condenser C-1 is in series with the antenna.
- Condenser C-2 is in shunt to the intermediate circuit.
- Condenser C-3 is in series with the magnetic detector.

For wave lengths from 1,600 to 2,000 meters.
- Condenser C-1 may be in or out of the aerial circuit as required.
- Condenser C-7 is in shunt to condenser C-2.
- Condenser C-8 is in shunt to condenser C-3.

For wave lengths from 2,000 to 2,600 meters.
- Condenser C-1 is in or out as required.
- Condenser C-9 is in shunt to condenser C-2.
- Condenser C-10 is in shunt to condenser C-3.

The switch S-1 in the foregoing drawings selects such values of inductance at L-2 as will give the correct degree of coupling at all wave lengths. The protective leak inductance R prevents the accumulation of heavy charges in the condenser C-1. The coupling between L-2 and L-3, and L-5 and L-4, is varied simultaneously by a single knob on the side of the box. A protective gap R protects the primary circuit of the tuner should by accident the circuits come in contact with the high voltage wires of the transmitter.

Because of the small secondary winding, this tuner is not suitable in the "tune" position

for a crystal detector, but will give some response on the "standby" side in which connection the crystal is connected in series with the aerial.

It has frequently been observed that the magnetic detector gives better response to 500 cycle transmitters when the iron band revolves at a speed about twice that used in receiving from 60 cycle transmitters. Normally the band travels at a very low speed—a few feet per minute.

Fig. 170—Type 106 Receiving Tuner (American Marconi Company).

138. **The Marconi Type 106 Receiving Tuner. (American Marconi Company).**—A receiving set of particular excellence combining mechanical and electrical features of merit is the type 106 tuner of the American Marconi Company. This set is of the panel type, the necessary controlling switches being mounted on the front of the board as shown in photograph 170, the coupler, variable condensers, potentiometer, etc., being mounted on the rear as in photograph 171. The *coupling* between the primary and secondary windings is varied by means of a special *rack and pinion adjustment* which is in turn controlled by a knob on the front of the panel with a scale marked from zero to 10 (marked "coupling").

The inductance of the primary winding is changed by means of *two multipoint switches,* one of which operating in conjunction with a barrel switch disconnects the unused portions of the primary winding for any particular adjustment of wave length. That is, the *primary winding is divided into four groups* which are cut into the circuit as the wave length is progressively increased. The connections to the separate aerial tuning inductance connected in series with the antenna system are included in the *"tens"* switch of the primary winding. The *"unit"* switch controls 10 single turns of the primary winding permitting any number of turns from one to maximum to be included in the circuit (as will be explained in paragraph 191).

The aerial circuit includes a *short wave variable condenser* which in the 180° position short circuits itself automatically by means of special contacts fitted to the movable and stationary plates. The secondary coil divided into 10 groups

is fitted with an *end-turn switch* which splits the winding into three complete groups. The secondary winding is shunted by a *variable condenser* which in the zero position is completely disconnected from the circuit, thereby cutting off the

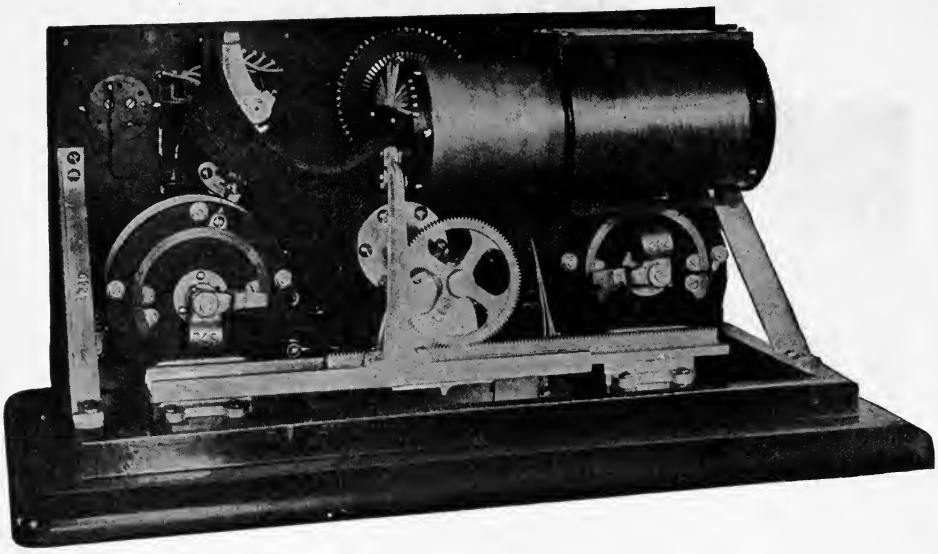

Fig. 171—Rear View Type 106 Receiving Tuner.

capacity effect between the opposite plates (of the variable condenser) in the so-called zero position of capacity.

A special *wire wound potentiometer* is supplied, having a resistance of about 450 ohms, the value of which is adjusted by a rotary multipoint switch.

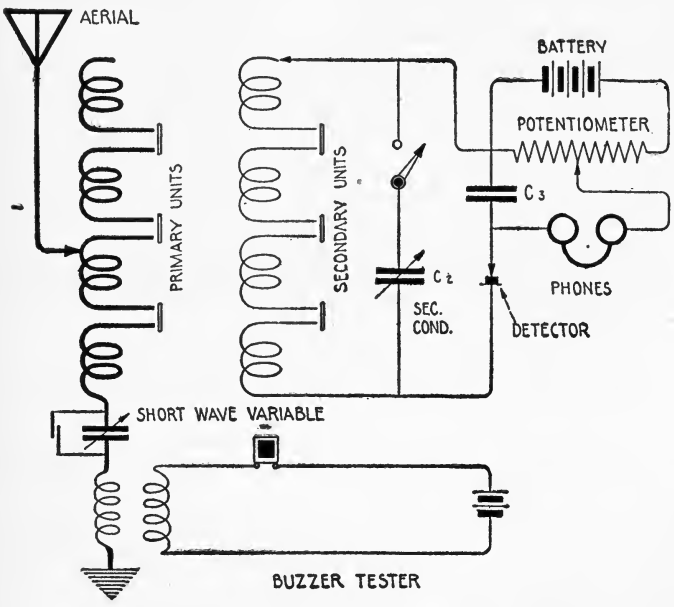

Fig. 172—Fundamental Circuit Diagram 106 Tuner.

The *receiving detector,* placed in a vertical position to the front of the panel, consists of a contact point with spring pressure mounted on a universal joint which may be placed in contact with the sensitive spot on one of several crystals mounted in a cup directly underneath.

A fundamental diagram of the type 106 tuner is shown in Fig. 172, which, as will be observed, is somewhat similar to the connections of Fig. 153b. The part of this diagram to be given particular attention is the connection of the

potentiometer, the head telephones and the fixed condenser C-3, and the grouping of the primary and secondary turns. The buzzer excitation system shown will be described in detail in paragraph 149.

The reader should note that the 106 tuner is constructed so that only the used turns of the primary and secondary windings are in direct inductive relation, that is, the unused turns of either winding do not overlap and consequently when the primary and secondary are set at low values of inductance, care must be taken to have these two windings in the correct inductive relation. For instance, by a little consideration, it will be evident that if the secondary winding is placed too far inside the primary coil the coupling is decreased just as it is when the secondary winding is drawn out of the coil.

The general instructions for the adjustment of the inductive receiving tuner given in paragraph 130 *are thoroughly applicable to the type* 106 *tuner. An increase of inductance in the antenna circuit for adjustment to a given wave length should be followed by an increase of the secondary inductance to maintain resonance. Also with each change of wave length there is a critical degree of coupling which gives the louder signals in the head telephone.*

Under conditions of loose coupling the secondary variable condenser is of some use to reduce interference, but under conditions of close coupling the condenser is preferably set near to zero values of capacity.

The short wave variable condenser is employed to tune the antenna circuit to signals the wave length of which is below the natural wave length of the receiving antenna. Response to shorter waves is obtained at capacities near to the zero position of the condenser scale. With this condenser in circuit, the wave length of the antenna system will be progressively increased (that is, the oscillation frequency decreased) as the control handle is moved in the direction of maximum capacity. In case of severe interference, the damping of the receiving antenna may be decreased in the following manner: For a given wave length set the short wave variable condenser at a certain value of capacity and obtain resonance by adding inductance at the aerial tuning inductance until maximum response is obtained. Care must be taken to select the correct values of inductance and capacity, which, of course, vary with each aerial. If excessive values of inductance are added, variation of capacity will have little effect on the incoming signals. The fact is that signals would not be heard under these conditions unless the transmitting station is near to the receiving station. Correct values of inductance and capacity are assured if a slight change in condenser capacity eliminates the signals.

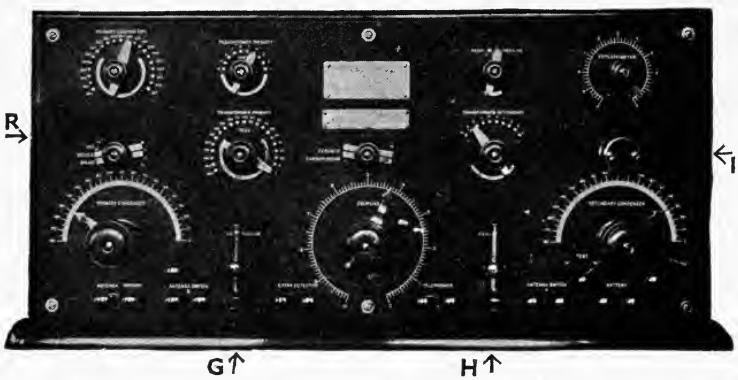

Fig. 173—Type 101 Receiving Tuner (American Marconi Company).

We may resume the function of the elements of the tuner as follows: The small push button marked *"Test"* immediately to the right hand side of the receiving tuner closes the circuit from the battery to the buzzer which permits the manipulator to obtain the best adjustment of the crystal. When turned to the right this button is locked in position. The two switches on the front of the Type 106 tuner marked *"transformer primary"* vary the inductance of the primary circuit. The switch marked *"Units"* cuts in a single turn at a time. The switch marked *"Tens"* varies the primary inductance in groups of ten turns at each point of contact.

The primary condenser has minimum capacity in the zero position but if turned to the 180° mark it is shunted by a special set of contacts (attached to the movable plates and thus cut out of the aerial circuit. *All control handles attached to the inductance changing switches and variable condensers of the primary and secondary circuits should be turned counter clockwise for increase of their values.*

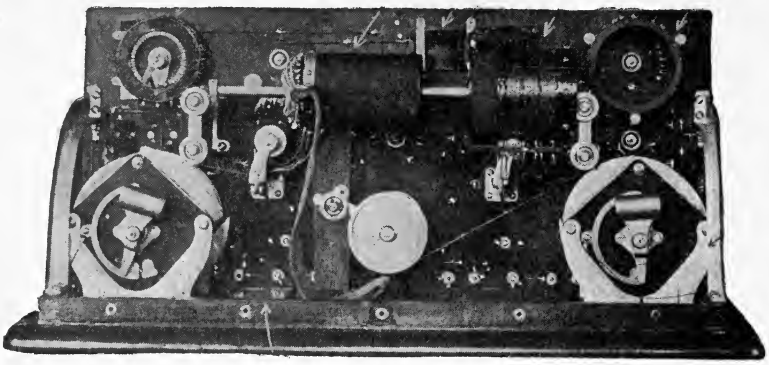

Fig. 174—Rear View Type 101 Receiving Tuner (American Marconi Company).

The switch marked *"transformer secondary"* and the control handle marked *"secondary condenser"* control the inductance and capacity of the secondary circuit. The wave length adjustment of the circuit can be increased by turning the switch or the knob of the condenser counter clockwise. Different values of inductance and capacity can be employed in this circuit while holding the same wave length. This changes the damping of the circuit and proper proportioning (of inductance and capacity) may give increased strength of signals during the reception of signals from certain stations.

The control handle marked *"potentiometer"* varies the flow of current through the detector crystal. Close adjustment of the potentiometer is necessary when the incoming signals are comparatively weak. The switch marked *"battery"* turns the local battery current on and off.

The terminals marked *"battery"* connect to four dry cells in a separate box and the terminals marked *"telephones"* are the binding posts for connection to 2,000 ohm receivers.

As the transmitter operates at approximately the wave length to which the secondary circuit of the receiver is adjusted, it produces exceedingly strong signals which are liable to impair the sensitive condition of the crystal. To obviate this, connections are made with the antenna switch so that when the antenna switch is in the transmitting position the terminals of the detector and the secondary condenser are short-circuited. Care should be taken to see that the antenna switch, with which this receiver is to be used, is so constructed as to perform the above operations. If this is done, the transmitter has very little or no effect on the sensitiveness of the crystal and it will, therefore, be in a sensitive condition for receiving immediately after transmission. (See diagrams, Figs. 201, 202 and 203.) In addition to paragraph 130 the student should read the general instructions in paragraph 156a.

139. Marconi Receiving Tuner Type 101 (American Marconi Company).—The type 101 receiver consists of an inductively coupled transformer with two solid rectifier detectors and the necessary accessory apparatus mounted on a hard rubber panel and enclosed in a mahogany case. The front elevation of this set is shown in photograph, Fig. 173, the rear elevation in Fig. 174, and a fundamental diagram in Fig. 175.

The aerial is connected to the binding post "antenna" and the earth connection is made to the binding post marked "ground." The circuit between these two points is adjusted to resonance with the incoming signal by variation of the two transformer primary switches, the primary loading coil switch, the primary condenser, and the primary condenser switch which is marked "out" "series" and "shunt." The purpose of this switch is to connect the primary condenser in series or in parallel to the aerial or to disconnect the condenser entirely.

Thus for long wave lengths the condenser is placed in shunt to the primary winding and for waves below the fundamental period of the aerial the condenser is thrown in series with the primary winding.

The function of the three other primary switches is to vary the number of turns of inductance in the aerial circuit.

The secondary circuit contains the transformer secondary coil, the inductance of which is varied by the transformer secondary switch, the secondary condenser, the cerusite and the carborundum detectors, the switch for connecting either of these two in the circuit, the potentiometer, and the switch marked "sent," "receive."

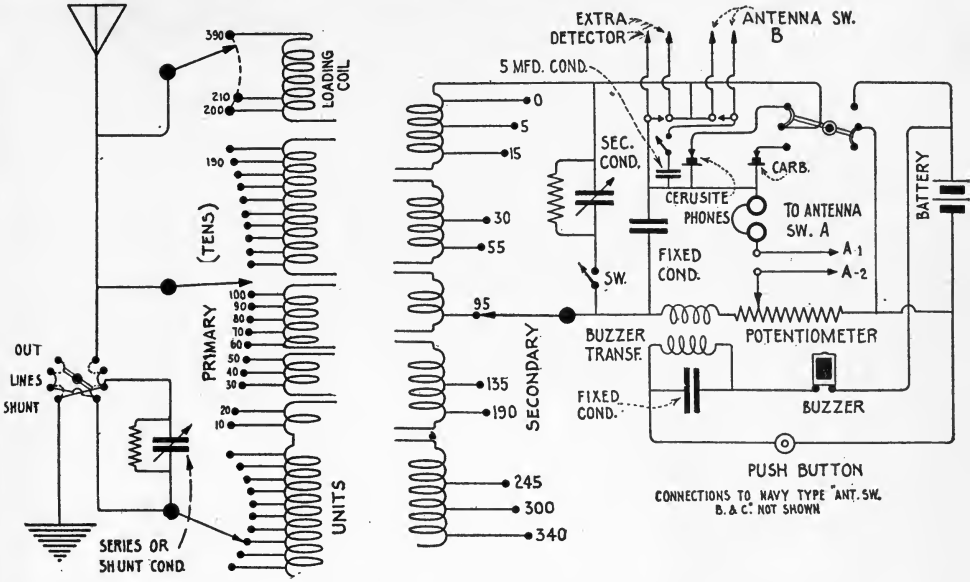

Fig. 175—Fundamental Diagram Type 101 Receiving Tuner.

The transformer secondary is moved in or out of the transformer primary coil by means of the handle marked "coupling." The capacity of the secondary condenser is varied by rotation of its handle, and the potential across the carborundum detector is varied by the rotation of the potentiometer handle.

Supplied with this set is a mahogany box containing four dry cells having three binding posts, marked 1, 2, and 3. Nos. 1 and 2 connect to the two binding posts on the receiver immediately under the word "battery," while No. 3 is connected to the post at the extreme right on the same level with "test" switch. This post completes the circuit from the battery to the test tuner.

Since the detectors work better with the battery current flowing in a certain direction, it is necessary to determine experimentally which binding post to connect to the carbon and which to the zinc electrode.

The head telephones are connected to the binding post "telephones." The binding posts marked "antenna switch A," posts 1 and 2, and "antenna switch B and C," posts 1, 2, and 3, are for connection to a specially designed navy type antenna switch.

When the navy switch is not used, posts A1 and A2, B2 and B3, C1 and C2, and B3 and B1 are short circuited with pieces of thick copper wire. (Not shown in figure 175.)

The posts marked "extra detector" are for connection with an outside detector. If the outside detector requires battery, place the detector switch in the position marked "carborundum," if not place it in position marked "cerusite."

The test buzzer is mounted within the metal cup directly over the secondary condenser and can be adjusted if necessary by removing the two cap screws.

Since the satisfactory operation of the set depends to a great extent on the switch blades making perfect connection with the switch studs, it is necessary to see that there is always good firm pressure between them. If for any reason this pressure becomes too weak, remove the screw in the handle, take off the handle, and remove the two screws

holding the switch blades in place. The blades can then be bent slightly so that when replaced they will make positive contact.

The complete adjustment of this tuner is as follows: Set the primary condenser switch to position "Out," place coupling pointer at about 7 on the scale, detector switch to "cerusite," secondary condenser pointer to position "Out," potentiometer to O, "send" and "receive" switch to "receive" (if used with navy switch or break system relay, leave in "send" position always), turn test switch to "In" position, which starts the buzzer; then adjust Cerusite Detector point on crystal surface until loudest response is heard. This crystal requires very light pressure for maximum sensitiveness and the point may be screwed up or down by turning the hard rubber knob to left or right.

Having found a sensitive point in the crystal, vary the inductance of the two primary

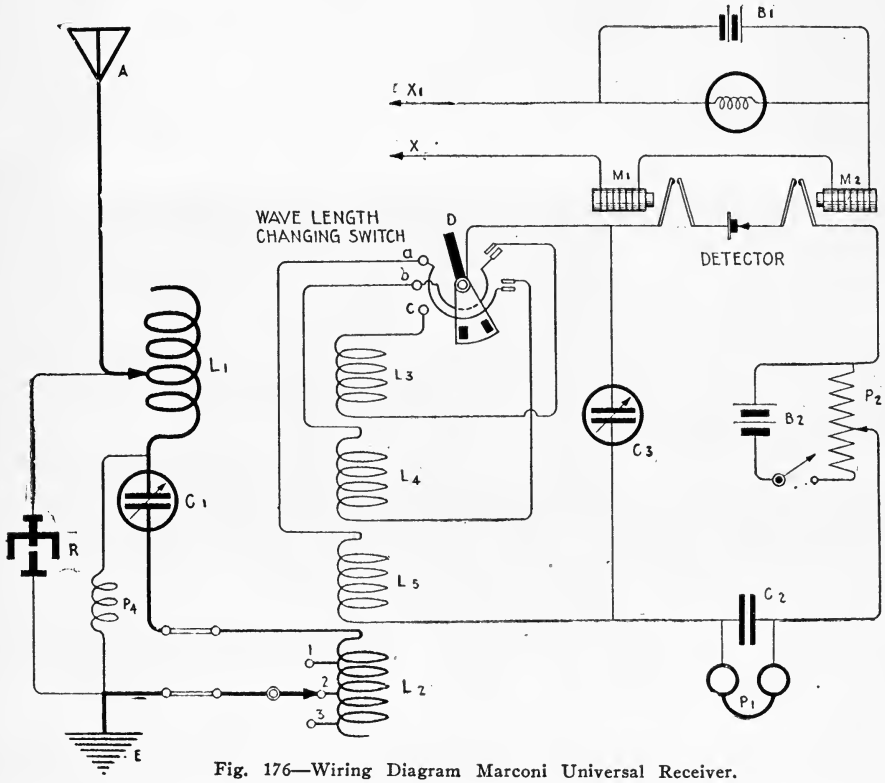

Fig. 176—Wiring Diagram Marconi Universal Receiver.

transformer switches until the desired signal is heard, then loosen the coupling by rotating coupling handle to the right until the signal is just audible, then try other points of transformer secondary switch and rotate secondary condenser handle to the left until a combination is found which gives maximum response.

The primary should then be readjusted more accurately until the best setting is found and the coupling then adjusted until the maximum strength of signal is obtained. The longer the wave length the greater the number of turns of inductance necessary in primary and secondary circuits. If more inductance is necessary for a particular signal and cannot be obtained by adjustment of transformer primary switch, place this in position marked "Out" and rotate the primary loading coil switch from its position "Out" until sufficient turns are in the circuit.

If the wave length of the incoming signal is shorter than can be reached with primary condenser switch in the "Out" position, place it in the series position, set the ten turn transformer primary switch at zero, the unit turn transformer primary switch at 10 and rotate primary condenser handle until maximum response is obtained.

Placing the primary condenser switch in the "Shunt" position increases the wave length of the aerial circuit corresponding to any given setting of the inductance switches. This may be done at any time instead of increasing the inductance. Generally speaking, the method of varying inductance is preferable and gives a louder response, but in exceptional cases the reverse is true and in any particular case a trial of the two methods can be made to find out which is the better. The best secondary setting for maximum response to any particular wave length is that of maximum inductance and minimum capacity, but the greatest selectivity will be obtained with smaller inductance and greater capacity.

When the carborundum detector is in use it will be necessary to adjust the potentiometer to a point which gives the greatest sensitiveness.

It should be noted that when using the Cerusite detector during the reception of very weak signals the potentiometer should always be in zero position, but for signals of moderate intensity it does not matter particularly what position this may happen to be in. In order that the operator may be able to measure approximately the wave length of the incoming signals, calibrations of the secondary are given with each tuner, it being understood that these are correct only when the secondary is coupled very loosely to the primary.

With the 101 receiver are supplied adjustable head telephones which are tuned to the group frequency of the transmitter. Also the electrical circuit through the telephones and the stopping condenser is tuned to the same group frequency.

It is advisable occasionally to insert a piece of paper between the spark points of the antenna and ground binding posts and telephone binding posts to make sure they are not short-circuited.

140. The Marconi Universal Receiving Set (English Marconi Company).—The complete circuits of the Universal Crystal Receiver are indicated in the diagram, Fig. 176, and a photograph of the finished instrument in Fig. 177, the tuner having been designed for wave lengths between 300 and 3,000 meters. The circuits are applicable to all types of crystal rectifiers, particularly those of carborundum, zincite, bornite, etc.

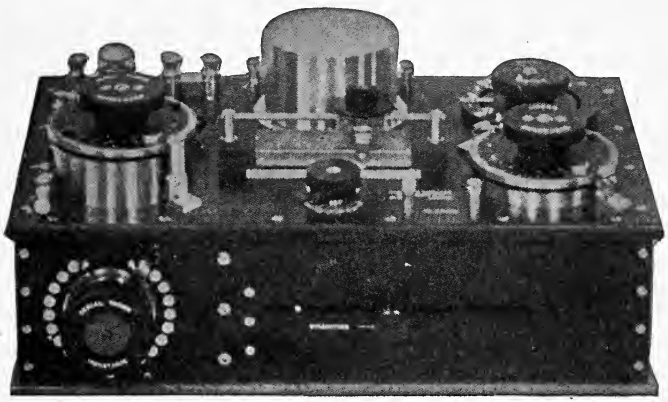

Fig. 177—Universal Crystal Receiver (English Marconi Company).

The usual aerial tuning inductance is represented at L-1, the short wave condenser at C-1, and the primary winding of the *tuning transformer* at L-2. L-2 has three tappings, which are varied by means of the switch. The secondary circuit of the receiving tuner is divided into three units, the following range of wave lengths being obtained with each: L-5 has the correct values for all wave lengths up to 600 meters; L-4 for waves between 600 and 1,600 meters, and L-3 for waves between 1,000 and 3,000 meters. The necessary change of inductance is obtained by the wave length changing switch D, which completely disconnects the unused turns from the circuit.

The functioning of the switch is as follows: In one position the switch blade D is connected to the high potential end of winding L-5 through contact point A; but a longer wave length adjustment is obtained by placing the switch on point B, which connects the receiving detector to the high potential end of L-4, and at the same time the lower right hand contacts alongside the switch spring together, joining the high potential end of L-5 to the low potential end of L-4. The same function is performed by switch point C and the upper right hand set of contacts.

The secondary condenser shown at C-3 possesses at maximum very low capacity. The potentiometer P-2 is shunted across the battery B-2. A protective choke is indicated at P-4 and a safety gap at R. The telephone condenser C-2 is of fixed capacity.

A novel feature of this tuner is the magnets M-1 and M-2, which are joined to battery

B-1, the terminals X and X-1 extending to a small switch alongside the transmitting **key.** Closing this switch energizes the magnets, which draw the contacts on either side of the crystal apart, completely disconnecting all attached circuits and thereby protecting the detector from induction of the transmitter. The magnets and the crystal holder are mounted in a metallic box.

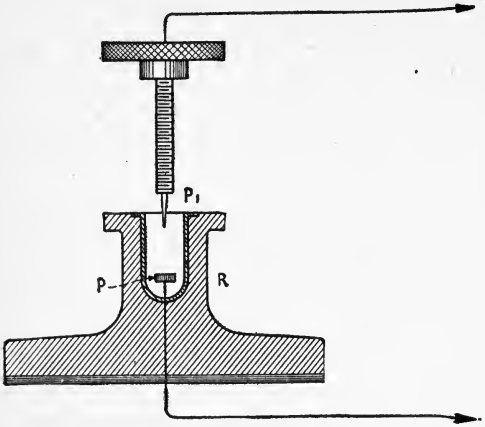

Fig. 178—Showing Construction of Electrolytic Detector.

A number of vessels in the trans-Atlantic service of the Marconi Company are fitted with this apparatus which has been found to permit reception over very long distances.

141. Electrolytic Detector.—A detector widely used in the early stages of wireless telegraph development in the United States is the so-called *"whisker point" electrolytic,* which is particularly sensitive and uniformly stable in operation. Of late, however, the electrolytic cell has fallen into almost complete disuse for commercial working, even though its reliability is generally admitted. From a commercial standpoint this may be accounted for by the fact that the initial adjustment of the device is rather troublesome.

The essentials of the detector appear in Fig. 178, where a small glass receptacle R has sealed in the base a small piece of *platinum P* about ½-inch square. About a half-dozen drops of a 20 per cent. solution of *nitric acid* or a *supersaturated solution of caustic potash* cover the lower electrode. The *upper electrode* P-1 is an extremely *fine platinum wire* about .0001 inches in diameter. The depth of immersion in the liquid is carefully regulated by a finely threaded screw adjustment. The platinum wire is generally coated with silver, which afterward is dissolved by dipping the point of the wire in a strong solution of nitric acid, leaving the small platinum tip exposed.

The silver need not necessarily be taken off the platinum wire by a strong acid solution; the point can be immersed in the usual detector solution of dilute nitric acid and an extra strong local current sent through the cell for a few moments until the silver is completely dissolved. Afterward the point is adjusted to just touch the solution.

Now, if this detector is substituted for the carborundum rectifier in the circuit of Fig. 153a, and the positive pole of the local battery connected to the fine wire electrode, the device becomes a very sensitive detector of currents of radio frequency, provided the small electrode just touches the surface of the acid.

The fine wire electrode is frequently coated with glass, so that the extreme tip only is exposed to the action of the solution, hence the depth of immersion of the entire electrode is of little importance and the detector is less difficult to adjust.

Several theories have been advanced to account for the action of the electrolytic detector, one being that the response in the local head telephone is caused by change in resistance of the small platinum wire during the passage of radio-frequent currents.

Another investigator contends that the current of the local battery flowing through the electrolytic cell forms gas bubbles which polarize the fine wire electrode, and thereby partially reduce the flow of current from the local battery. Then when oscillations of radio-frequency pass through the cell, the gas bubbles are temporarily destroyed, which permits an increase of the strength of the local battery current at rates corresponding to the spark frequency of the transmitter.

The electrolytic detector is adjusted for maximum strength of signals, by carefully regulating the strength of the local battery current. If the current is too strong, a hissing sound is obtained in the head telephone which will prevent the reception of signals. If, on the other hand, the local current is too weak, the detector will barely respond. Some difference of opinion exists regarding the direction in which the local current must flow through the

cell, but it is usual to connect the fine wire electrode to the positive pole of the cell.

H. Shoemaker has discovered that the large electrode may be of zinc, and if the small platinum point and zinc are immersed in a dilute sulphuric acid solution, the cell not only acts as a detector of oscillations, but supplies its own local E. M. F. as well. In this form the detector is termed a *primary cell* detector.

142. The Three Element Valve Detector.—A modified type of the two element Fleming valve is the three element valve, the circuits for which are shown in Fig. 179. From the viewpoint of mechanical construction, it is practically identical with the Fleming valve, with the exception that a metallic element known as a *grid* is placed in the path of the electrons flowing from the filament to the plate.

This grid may be made up of a zig-zag shaped *platinum wire* or a *plate* perforated with holes, or in certain types of valves it consists of a *spiral of copper*. The filament may be constructed of *tungsten, tantulum* or *platinum*.

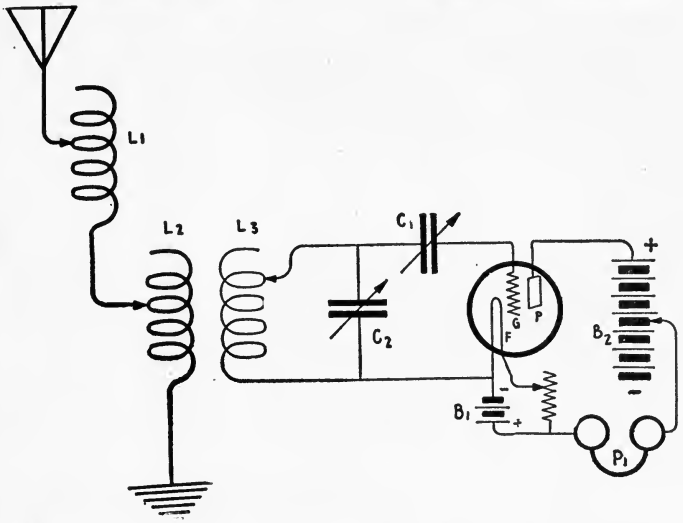

Fig. 179—Fundamental Circuit for the Three Element Oscillation Valve.

The circuit generally adopted for the three element valve appears in Fig. 179, where the primary and secondary circuits of a receiving tuner are represented by the usual notations and the grid, plate and filament of the valve by G, P, and F, respectively. An important part of this circuit is the so-called grid condenser C-1, which generally has low capacity, varying between .00003 and .0005 microfarads.

In addition to the lighting battery B-1, which is generally of 4 volts, a local battery B-2 of 35 to 200 volts has its positive terminal connected to the plate P and the negative terminal to the telephones P-1, which are in turn attached to the positive end of the battery B-1. The secondary terminals of the receiving tuner are connected to the negative terminal of the filament and to the grid.

In this form of valve as in that already described, the incandescent filament produces electrons which give to the vacuous space conductivity in one direction only. In the two element bulb, the plate element serves both to impress the received oscillations on the vacuous space and to connect the telephone thereto. In the three element bulb these functions are separated, the first being assigned to the grid and the second to the plate. A gain in flexibility and ease of manipulation is thereby secured.

As in the two element valve, the electrons carry the local battery current as well as the incoming oscillations and the effect of the latter is to vary the local battery current, producing the so-called relay action.

According to the explanation advanced by Armstrong, the *grid element*, if placed in the path of the electrons, *receives a negative charge which decreases the local battery current*, i. e., the current flowing between the plate and filament. An external positive charge applied to the grid will in a degree neutralize the negative charge and thus increase the local battery current, but an external negative charge will cause *greater absorption of electrons and reduce the battery current* to a lower figure. Hence, if an alternating E. M. F. be impressed between the grid and filament the positive alternation increases the local battery current and the negative alternation decreases it.

In order to receive the maximum strength of signals from spark stations, the detector must be connected in a circuit that will permit an *accumulative* effect for each group of

incoming oscillations. Such a circuit is shown in Fig. 179, which, according to Armstrong, functions as follows: The radio-frequent oscillations induced in the secondary circuit of the receiver are rectified by the *valve action* between the grid and filament, and a *negative charge* is placed in the condenser C-1 which reduces the electron current from F to P. At the termination of the wave train this charge leaks off through the grid. The grid then returns to normal potential and also the local current, whereupon the process is repeated. If the valve is properly constructed, i. e., if a good sample is used, it is a very sensitive detector, much stronger signals being obtained than with an ordinary crystal rectifier.

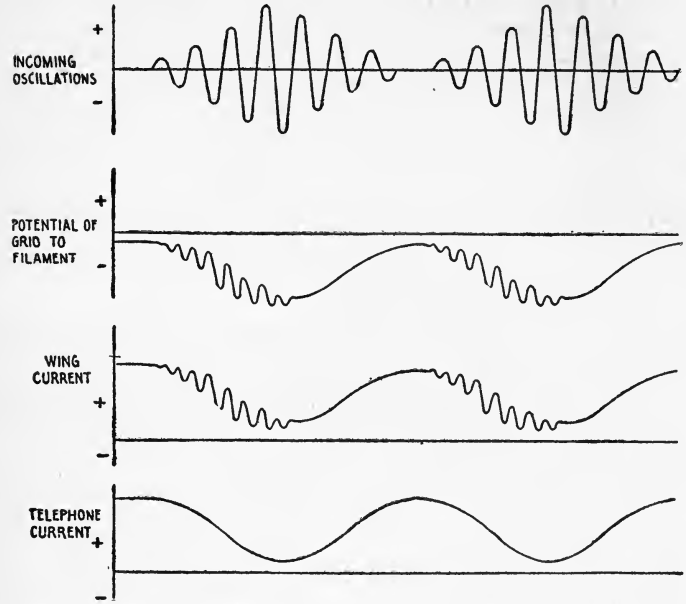

Fig. 180—Curve Showing the Process by which the Three Element Valve makes Damped Oscillations Audible.

Oscillograms of this detector taken by the same investigator indicate that the three element valve not only functions in the manner just explained, but that the oscillations of radio-frequency flowing through the grid circuit are *repeated* in the head telephone circuit and superimposed upon the local battery current. However, the radio-frequent oscillations (repeated in the local battery circuit) produce no sound, but the audio frequency variation of the continuous current in that circuit does create an audible sound of a pitch determined by the spark frequency of the transmitter.

The process involved in the detection of oscillations induced in the receiver by a distant transmitting station can be shown by the curves of Fig. 180, which indicate first: *the oscillations of the incoming signals;* second, *the potential of the grid circuit with respect to the filament;* third, *the decrease of the wing current and the superposed* oscillations of radio-frequency, and finally, *the resulting fluctuation of current in the head telephone.*

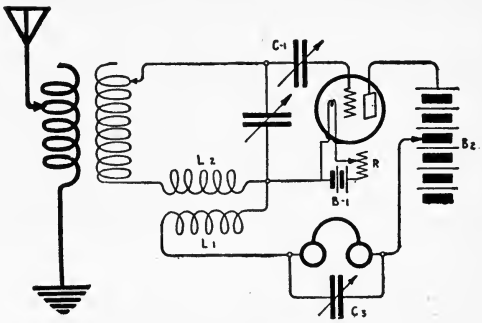

Fig. 181—"Repeater" or "Regenerative" Vacuum Valve Circuit.

Either the current of radio- or audio-frequency reproduced in the local circuit of the vacuum valve can be increased in amplitude by special connections on the same valve or by connecting a number of valves in cascade. In the first method, the current of radio- or audio-frequency is repeated back to the grid circuit by special radio- or audio-frequency transformers, but in the second method, a transformer is connected in the local battery circuit and its secondary terminals connected to the grid and filament of a second valve by which the incoming radio signal is amplified by repetition of the action shown in Fig. 180.

The three element vacuum valve connected in a simple tuning circuit for the reception of spark signals is adjusted for the maximum strength of signals as follows: (1) *The incandescence of the lamp filament is carefully adjusted by the filament rheostat;* (2) *The voltage of the local battery is varied until the maximum strength of signals is obtained.* To protect the filament and assist adjustment, modern sets have a small ammeter connected in series with the lamp filament by which the degree of incandescence is definitely fixed.

143. A Repeater Vacuum Valve Circuit.—A method for repeating the current of radio frequency flowing in the telephone circuit back to the grid circuit of the same bulb appears in Fig. 181. This system has been found to be particularly successful in operation and gives increased strength of signals from a given station. Part of the energy of the oscillations of radio-frequency flowing in the telephone circuit is repeated back to the secondary circuit through the coupling coils (of radio-frequency) L-1 and L-2, and the amplitude of the grid oscillations thereby increased. The amplified grid oscillations then react upon the telephone circuit, producing still greater variation of the local current, thus further reinforcing the oscillations of the system.

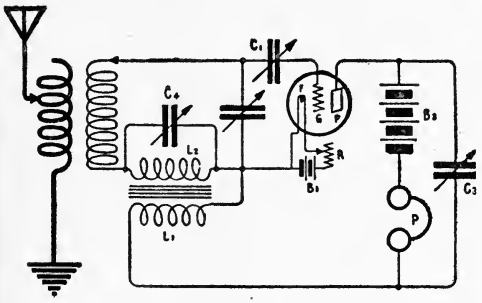

Fig. 182—Audio-Frequency Repeater Circuit.

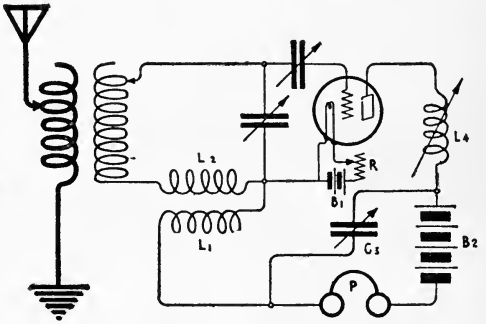

Fig. 183—Tuned Regenerative Vacuum Valve Circuit.

The complete process does not interfere with the action of the valve as a detector, which at the same time charges the grid condenser in the usual fashion, but with increased strength, due to the repeating action of the system.

To permit the oscillations of radio-frequency to flow across the telephones, the condenser C-3 is connected in shunt. This circuit will function without the condenser C-3, the necessary capacity being found in the parallel cords of the telephone.

The current of audio-frequency flowing in the local telephone circuit may be repeated to the grid circuit by the method shown in the diagram of connections, Fig. 182, where a coil of audio-frequency (one of large inductance values) L-1 is coupled inductively to a similar coil, L-2, which is connected in series with the secondary winding of the receiving tuner. C-4 permits the oscillations of radio-frequency to pass to the grid and filament and also serves to tune the circuit L-2, C-4 to the audio-frequent current of the local circuit. Although in this case an audio-frequent current is also dealt with, the action is identically the same as in repeating back currents of radio-frequency.

A circuit has been evolved by Armstrong where both the radio- and audio-frequent currents can be simultaneously repeated back to the grid circuit and although considerable amplification of the incoming signals is thus obtained, the system has been found difficult to keep in stable operation.

Referring again to the circuit diagram, Fig. 181 (where the current of radio-frequency in the local telephone circuit is repeated back to the grid circuit), an improvement can be effected by the connections shown in the diagram, Fig. 183, where the local circuit is tuned to resonance with the grid or secondary circuit by the tuning coil L-4. The condenser C-3 shunts the head telephone and battery, while the coil L-1 repeats the oscillations of radio-frequency back to the grid circuit through the coil L-2. The circuit is suitable for the reception of damped or undamped oscillations, and has been found to magnify the incoming signal several hundred times.

It will be noted from the foregoing diagrams, Figs. 179 to 183, and the explanations given, that three principal circuits, which may be termed the *primary, secondary* and *tertiary* circuits, must be placed in resonance, the tertiary circuit being the local telephone circuit, with its tuning coils and condensers. The three circuits are not only adjusted (in the case of the reception of spark signals) to substantial resonance, but in addition the coupling of the repeating transformer must be carefully adjusted, as well as the coupling between the primary and secondary windings. Correct values of inductance and capacity must be selected in each of the three circuits for any particular wave length. Beyond the tuning of the third circuit, the general mode of operation is practically the same as with the ordinary radio-frequency tuners.

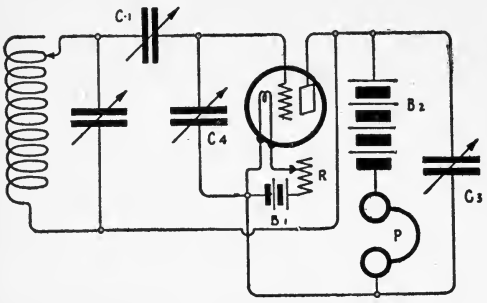

Fig. 184—Simple Regenerative Circuit.

It should not require explanation that with the amplification of signals obtained by the circuits shown in Figs. 179 to 183 the useful range of transmitting apparatus has been considerably increased.

Another circuit for the *amplification of incoming radio signals* is shown in the diagram, Fig. 184, wherein the principal point to be observed is the connection of the secondary terminals of the receiving tuner to the vacuum valve.

One terminal is connected through the grid condenser to the grid and the opposite ter-

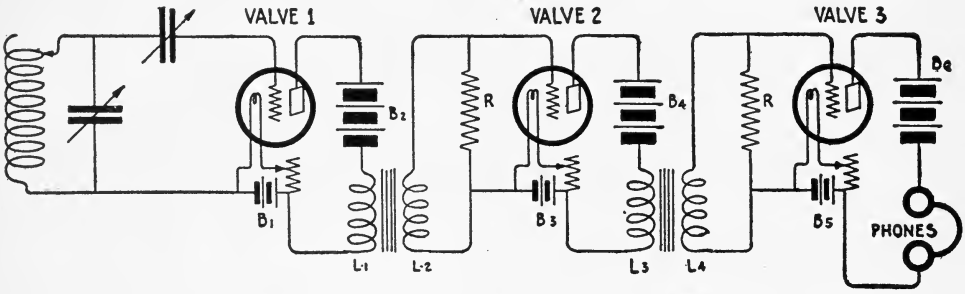

Fig. 185—Vacuum Valves Connected in Cascade.

minal to the plate of the valve instead of to the filament. The local battery B-2 and the head telephone P, are shunted by a condenser C-3, and an additional condenser C-4 is connected between the grid and filament of the valve. The mode of operation of this circuit probably does not differ from the repeating circuits previously described, because, as will be seen, there is a certain amount of electrostatic and magnetic coupling between the secondary and tertiary (local telephone circuit) circuits. The system is adjusted in the following manner: The secondary circuit, including the secondary condenser, is tuned to resonance with the primary circuit and the incoming wave. The condenser C-1 is set at very low values of capacity, and the capacity of C-3 varied, also C-4, until maximum response in the head telephone circuit is obtained. Like ordinary vacuum valve circuits, the potential of the battery B-2 must be carefully regulated and the valve worked below the characteristic "blue glow" point. The vacuum valve connected in this manner is suitable for the reception of either damped or undamped oscillations.

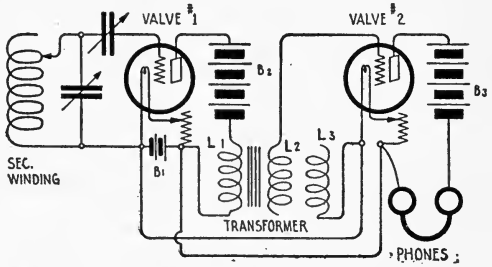

Fig. 186—Cascade Connection of Vacuum Valve with One Lighting Battery.

144. The Vacuum Valve Amplifier.—The incoming signals made audible by the simple vacuum valve circuit shown in Fig. 179, may be amplified considerably by connecting several oscillation valves in cascade as per the diagram, Fig. 185. The fluctuations of current in the local circuit are *impressed upon the grids of a second and third valve* where due to the relaying or trigger action of the bulb, progressive amplification is obtained.

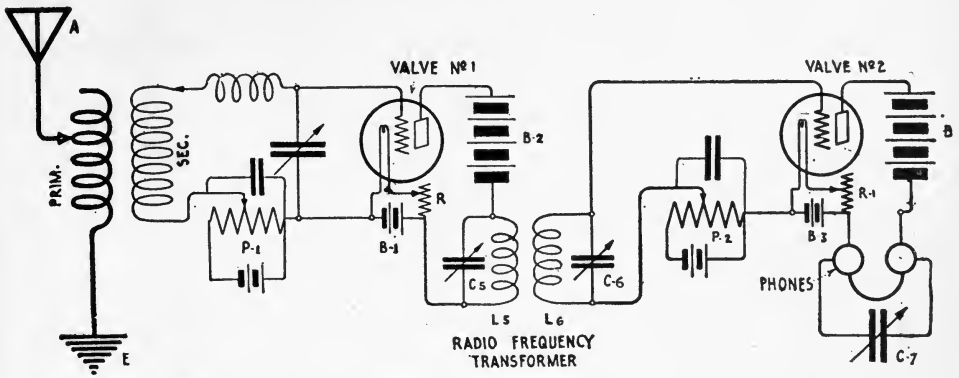

Fig. 187—Circuit for Cascade Amplification of Radio Frequencies.

In the diagram, Fig. 185, in which the left-hand part of the circuit starts with the secondary winding of the receiving transformer, the telephones are removed from the local battery circuit and replaced by an iron core inductively coupled transformer of audio-frequency dimensions. The primary winding L-1 is connected in series with the battery B-2, but the terminals of the secondary winding L-2 are connected to the grid and filament of the second vacuum valve. The circuit continues in this manner throughout several bulbs, but generally the fluctuations of current in the third or fourth step are strong enough to paralyze the valve, particularly if the vacuum is not sufficiently good. Usually this system does not function well above the third step. To prevent the accumulations of extra high potentials on the grids of the amplifying valves, an extremely high resistance, R (of from 500,000 to 1,500,000 ohms resistance) may be connected from the grid to the filament. It is, of course, understood that the incandescence of the filament of each vacuum valve will be carefully regulated by a small rheostat and the voltage of the local battery regulated until the best operating condition for the individual bulb is obtained.

If the diagram of connections, Fig. 186, are adopted, a single storage battery may be employed to light all valve filaments. It will be noted that the secondary circuit of the audio-frequency transformer L-2, L-3 is conductively open, and although it is somewhat difficult to explain exactly how this transformer functions, good results are reported to be obtained by means of it. Either of the foregoing types of amplifiers may be used to step up the signals of an ordinary wire telephone as well as the signals of wireless telegraphy.

145. Amplification of Radio Frequencies.—By means of a cascade connection of vacuum valves, we may amplify the oscillations of radio frequency, transferring them from one bulb to another until the desired increase of signal is obtained. A satisfactory diagram of connections appears in Fig. 187.

The circuits of radio-frequency are similar to those of any receiver, with the exception that a small value of potential from a local battery is applied to the filament and grid of each vacuum valve, the E. M. F. being adjusted by the potentiometers P-1 and P-2. The incoming oscillations amplified by the first vacuum valve are transferred into the second vacuum valve through the radio-frequency transformer L-5, L-6. The circuit of L-5 is tuned to resonance with the incoming oscillations by the condenser C-5 and the secondary circuit L-6, C-6 tuned to the same frequency by means of C-6. By proper adjustment of the volt-ampere characteristic of the second bulb (by the potentiometer P-2) the effect of the incoming oscillations is to place a charge in the condenser C-7 in shunt to the head telephones,

which in turn discharges through the windings of the telephones, causing a single sound.† More in detail, by proper adjustment of the potentiometer in the grid circuit of the last valve, the amplitude of the positive half of the radio-frequent current repeated in the tertiary or local telephone circuit exceeds the amplitude of the negative half, and, due to this fact, more current flows in one direction than in the other; accordingly, the telephone condenser C-7 becomes charged over a period corresponding approximately to that of the duration of a wave train and then probably discharges in one direction through the head telephones at rates corresponding to the spark frequency of the transmitter.*

146. The Effects of Distributed Capacity.—Every coil of wire possesses a certain amount of distributed capacity (sometimes termed self-capacity), e. g., energy is stored up *between adjacent turns* during the flow of oscillations in the form of *electrostatic lines of force,* which produce an effect similar to connecting a small condenser in shunt to the coil.

Thus a tuning coil of given dimensions, having considerable *self-capacity,* will have a defined time period of oscillation and will respond more freely to one impressed frequency than to another. Now, it is found by experiment that a crystal detector, such as the carborundum rectifier, gives the loudest response in the receiving telephone when the maximum possible voltage for a given group of incoming oscillations is impressed upon it, and generally a secondary receiver circuit in which inductance predominates gives the maximum possible voltage. Then if a secondary circuit minus a shunt condenser is constructed so that its natural oscillation frequency accords with the frequency of the oscillations flowing in the transmitter aerial, maximum response is secured. All this may be summed up by saying that a secondary receiver circuit lacking a shunt variable condenser functions similar to one in which it is supplied, the necessary capacity being found in the self-capacity of the coil. A primary winding having distributed capacity is somewhat objectionable for use in tuning circuits, because an appreciable amount of current will oscillate through the unused turns, particularly if the frequency of the incoming signal equals the natural frequency of the coil. Coils made of fine wire or those wound irregularly tend to reduce the effects of distributed capacity.

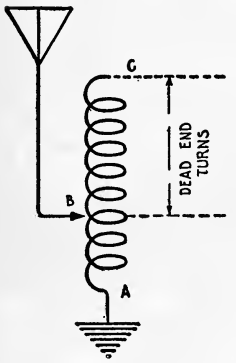

Fig. 188—Showing the "Dead-end" or "End" Turns of a Receiver Tuning Coil.

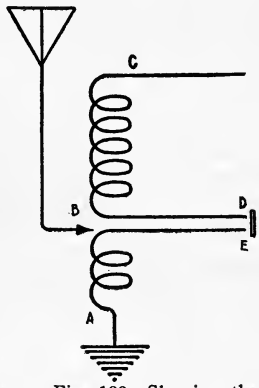

Fig. 189—Showing the Position of an End Turn Switch.

147. The End Turns of a Receiving Tuner and End Turn Switches.—In the preceding paragraph the effect of distributed capacity in the windings of a tuning coil was discussed, and the fact mentioned that a coil of given dimensions may have a well-defined time period of oscillation and may therefore oscillate more freely to an impressed current of a particular frequency.

Assume that such a coil is connected in series with the antenna circuit shown in Fig. 188 and that for *resonant* adjustment to the wave length of 600 meters the turns between points A and B only are required. The remaining turns from B to C are therefore useless for this particular wave length, and should the coil have a natural time period of oscillation corresponding to the wave of 600 meters, an appreciable amount of current would oscillate backward and forward through the *unused or end turns.* This in effect amounts to placing a secondary circuit in resonance with the antenna circuit and results in the absorption of some of the energy of the oscillations.

If the antenna system were only to be tuned to the maximum wave length of 600 meters, the additional turns on the coil B to C would not be required, but inasmuch as the aerial system may have to be tuned to various wave lengths up to 3,000 or 4,000 meters, the full number of turns are required for the winding.

If then, for example, the coil A, C, is interrupted at the point D, E, as shown in Fig. 189, the unused turns of the winding are conductively disconnected from the used turns and

† Note also the radio-frequency amplifier described in paragraph 226. Note also diagram Fig. 296.
* Explanation according to Armstrong.

therefore a considerable amount of current which heretofore oscillated through the unused turns is now converted to a more useful purpose.

All this leads to the point that the maximum degree of efficiency and selectivity is obtained from a receiving tuner having properly located "end turn" switches fitted to the primary and secondary coils. It should, however, be remembered that merely disconnecting the unused turns does not completely prevent the absorption of energy by that part of the circuit, but it tends to reduce the absorption to a minimum.

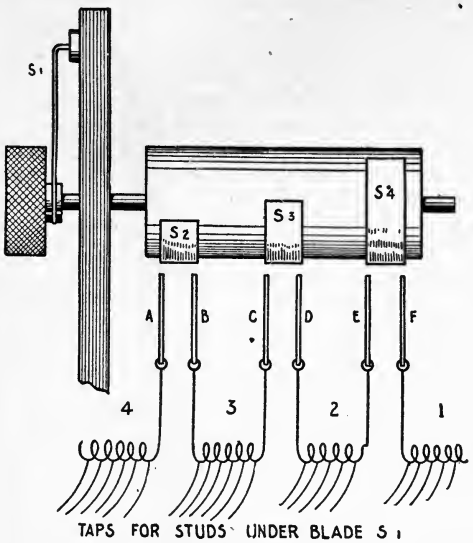

Fig. 190—Sketch Showing the Construction of "End Turn" Switch.

An *"end-turn" switch* may take one of several designs but the fundamental construction of the type used in the latest tuners manufactured by the American Marconi Company is shown in the diagram, Fig. 190, where the successive groups of a primary or secondary tuning coil are represented at 1, 2, 3 and 4. Mounted on a hard rubber drum are the copper segments S-2, S-3 and S-4, which are slightly offset so that the successive units of the tuner winding are connected in the circuit when the knob is turned counter clockwise. The circuit is completed by brushes A and B which make contact with segments S-2 and brushes C and D which make contact with S-3 and so on. In addition the switch blade S-1 makes contact with the taps of a multipoint switch (not shown) which cuts in groups, 10 turns at a time. For example, when the switch S-1 has been turned, let us say, counter clockwise until all the turns of section No. 1 are cut into the circuit then segment S-4 makes contact with brushes E and F, connecting section No. 2 in the circuit. The blade of the multipoint switch S-1 then progresses across the contacts connected to the turns of section 2 and when the last stud has been passed, the circuit is completed through the next group by brushes C, D, which make contact with segments S-3. The switch blade S-1 then progressively cuts in the additional turns of section No. 3 and so on until S-2 cuts in group No. 4.

In the design of a commercial receiving tuner, the primary or secondary winding is interrupted at points suitable to the standard wave lengths. For example, if sections 1, 2, 3 and 4 are the secondary units of a receiving tuner, the winding is interrupted between 1 and 2 at such a point that the wave length of the closed circuit (with small values of capacity in shunt) will be slightly above 600 *meters*. The next interruption of the circuit will be made at a point where the wave length adjustment is slightly above 1,000 *meters*, the next for 2,500 *meters*, and so on. The foregoing selections are those agreeable to American practice where ships communicate with naval or Marconi ship and shore stations.

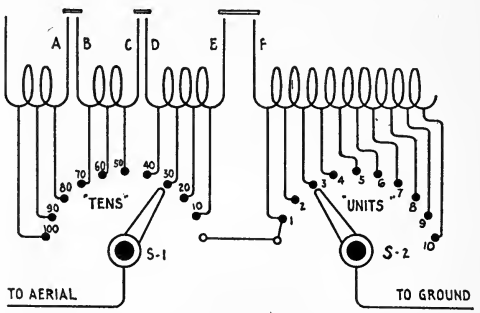

Fig. 191—Showing How the Inductance of the Radio Frequency Tuning Coil Can Be Varied by One Turn at a Time.

148. The Variation of a Radio Frequency Inductance.—In the earlier types of receiving tuners, the inductance of the radio-frequency coils was varied by mounting a sliding contact on a brass rod, the contact passing over successive turns of bare wire. It is obvious that such a design is mechanically incorrect be-

cause the sliding contact soon cuts through the wire either actually breaking the turns or short circuiting adjacent turns.

By the method shown in the diagram, Fig. 191, the inductance of a single layered coil can be progressively varied from one turn to the maximum number simply through the use of two multipoint switches doing away with the sliding contact.

For purposes of illustration, assume a winding having 110 turns. Then the first 10 single turns are connected to the contact points of the switch S-2 and the remaining turns are connected in groups of 10 to the contact points of the switch S-1. An odd number of turns can be selected in the following manner: *If 87 turns are required for resonance in any particular circuit, switch S-1 is set at the eighteenth contact point and switch S-2 on contact point 7, making 87 complete turns.* One turn of inductance, for instance, can be selected by setting S-1 at zero and S-2 at contact point 1. This is the method by which the inductance of the primary winding of the Marconi type 106 receiving is varied.

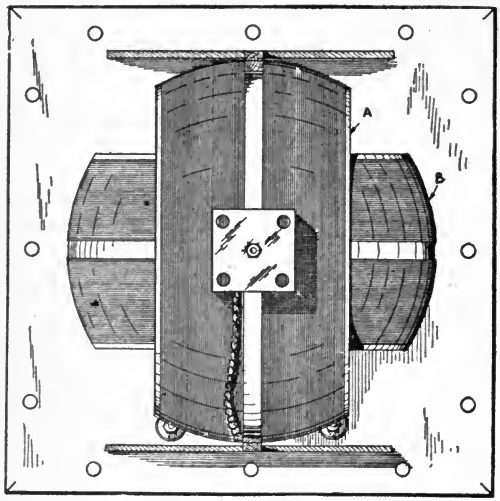

Fig. 192—The Construction of the Variometer.

It is not usual to vary the inductance of the secondary circuit of a receiving tuner in this manner. The method generally employed is to vary the inductance by groups of 10 or 15 turns at a time, the necessary closeness of adjustment between groups being obtained by the shunt variable condenser for sharp tuning.†

Extremely close variation of the inductance of a radio-frequency circuit can be obtained by the instrument termed the *variometer,* the principle of which has already been explained in connection with the transmitter.

A *variometer** suitable for receiving apparatus is shown in Figs. 192 and 193, where a stationary coil A has mounted within it a ball winding B which rotates on a metal shaft. A knob and pointer is attached to the shaft and a suitable scale supplied. The *ball windings A and B are connected in series* and if, in one concentric position, they are connected so that their magnetic fields oppose the inductance of the variometer will be practically zero, but if the inner ball is turned on its axis, the inductance will gradually increase, maximum inductance being obtained, when the *inner coil* has completely changed sides with respect to the outer coil. For receiving apparatus, the inner and outer balls are generally wound with No. 24 B. and S. wire if connected in the antenna circuit and with No. 32 B. and S. wire, if connected in series with the secondary or detector circuit.

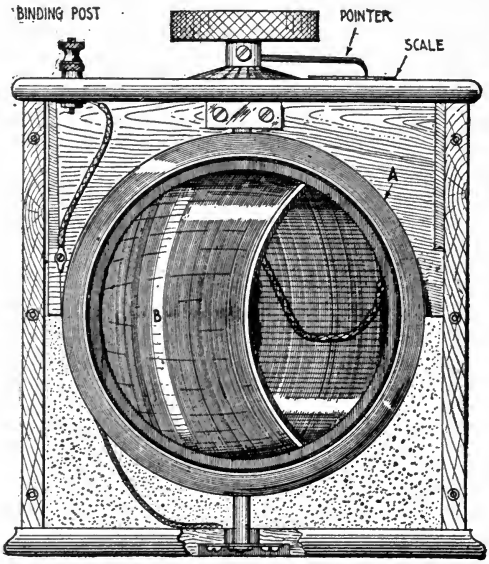

Fig. 193—The Tuning Variometer Complete.

Although the variometer is a very useful instrument for tuning the receiver, it possesses the disadvantage of offering considerable resistance to the passage of radio-frequent currents when used at inductance values near to zero. That is to say, a sim-

*See paragraph 30; also fig. 18.
†See section H appendix.

ple tuning coil of the same value of inductance, would obviously possess less resistance.

149. Buzzer Excitation Systems.—If any part of an active vibrating buzzer (energized by a battery) is placed in inductive relation to either the open or closed circuits of a receiving set, the fluctuations of the battery current act inductively on the receiving circuits and set up therein feeble currents which are rectified and made audible in the head telephone.

Maximum response in the head telephone is obtained when the crystal rectifier is adjusted for the best degree of rectification, hence the buzzer affords a ready means for readjustment of a receiving detector of any type. A perfect reproduction of the tone of the buzzer is obtained in the head telephones, the pitch varying in accordance with the interruptions of the vibrator.

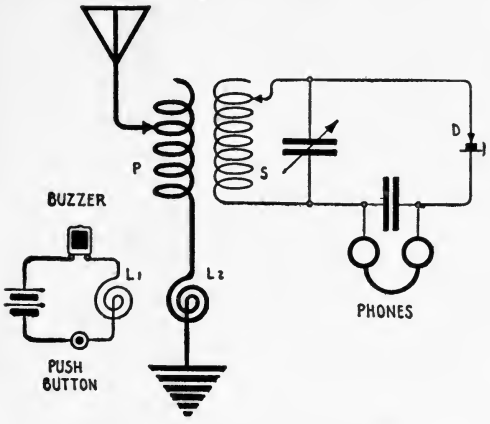

Fig. 194—Buzzer Excitation System.

In one method a wire is extended from some part of the buzzer circuit, preferably the contact points, and is connected directly to either the earth lead of the receiving tuner or to one terminal of the secondary circuit, but *the better method is to place some part of the circuit leading to the buzzer in inductive relation to the antenna system as in the diagram, Fig.* 194. In this diagram a small coil L-2 of 6 or 7 turns of wire (about 1½ inches in diameter) connected in series with the antenna system has wound around it, 7 turns comprising the coil L-1. Coil L-1 is in series with the battery and the buzzer, and consequently when the buzzer is set into action, a change of flux takes place through L-1 which sets up a difference of potential across L-2 and, therefore, charges the antenna system, causing it to oscillate at the particular frequency to which it is adjusted. Then, when the secondary circuit of the receiving tuner is adjusted to resonance with the antenna circuit and the crystal detector adjusted for the most sensitive operating condition, the louder sound will be obtained in the head telephone.

With supersensitive receiving apparatus it is sometimes necessary to place the buzzer excitation circuit several feet from the windings of the receiving tuner to prevent the sound in the head telephone from becoming of unbearable intensity.

Although various means have been devised to shield crystalline detectors from the local transmitting apparatus at a given station, none have as yet afforded the desired protection. Hence, it is generally necessary at the close of a period of transmission to readjust the receiving detector to its maximum degree of sensitiveness. If the receiving tuner is fitted with a test buzzer the detector can be quickly readjusted by setting the buzzer into action and changing the position of the opposing contact on the crystal until the loudest signals are obtained.

Fig. 194a—3,000-Ohm Head Telephone Receiver.

The ordinary vibrating buzzer can be put to a variety of uses in radio telegraph systems, such as *exciting the circuits of a wavemeter or setting up oscillations in an aerial system for radio telegraph measurements.* Such circuits will be described in the chapter following.

150. Receiving Telephones.—The flux generated by a given electromagnet

is determined by the product obtained in multiplying the strength of the current by the number of turns, e. g., the ampere turns determine the magnetizing flux. Hence, if a feeble current only is available, a magnet wound with a large number of turns of fine wire will generate the greatest magnetizing flux.

Now the local circuit of the *average telephone receiver,* such as shown in Fig. 194a, is traversed by feeble currents, and therefore the magnets of the telephones should be wound with a great number of turns of rather fine wire such as No. 36 or No. 40 B. and S. Such a winding necessarily has considerable resistance, but a greater magnetizing force will result therefrom than would be obtained by a winding of a few turns of coarser wire. The resistance of the average telephone receiver for reception of radio signals is 2,000 to 3,000 ohms. These receivers are generally more sensitive than the type employed in land line telephony; but it should be borne in mind that it is not alone the magnetizing flux generated that determines the volume of sound produced by the telephone, but the overall construction influences its sensitiveness as well. This includes particularly the weight of the diaphragm which in radio receivers is generally lighter than the diaphragm used in the ordinary wire telephone receiver.

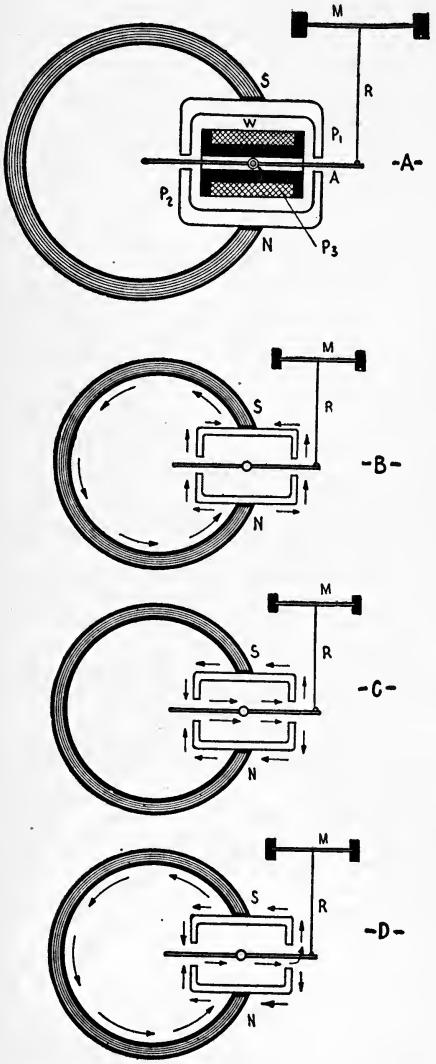

Fig. 195a, b, c, d. Construction and Magnetic Circuit of the Baldwin Telephone.

A series of experiments conducted by Dr. Austin indicate that the average telephone produces the greatest volume of sound when the frequency of the alternating current passed through the windings varies from 300 to 500 cycles per second. Frequencies in excess of 500 cycles decrease the amplitude of vibration of the telephone diaphragm and hence produce less sound.

In view of the foregoing, a transmitter having a *spark frequency of* 600 *to* 1,000 *sparks per second gives better response in the head telephones than one of lower frequency.* Part of this is due to the fact that the human ear is more responsive to the higher frequencies than to those of lower pitch.

Telephones of 75 to 150 ohms resistance, if used with the magnetic detector, the tikker, and the three element vacuum valve gives good response, but other receiving detectors, such as the crystal rectifiers, require telephones of at least 2,000 ohms resistance. Telephones of 15,000 ohms resistance have been constructed but such a winding is not required for the average radio receiver.

A *telephone receiver* possessing a notable degree of sensitiveness has been recently developed in the United States by T. Baldwin. The essential parts of this receiver are indicated in the diagram, Fig. 195a, where a ring shaped horseshoe magnet with poles N and S is fitted with two "U" shaped soft iron pieces, P-1 and P-2. The telephone winding W, placed longitudinally between these pole pieces, has a slot in the center in which is placed a soft iron armature balanced on the pivot P-3. One end of the soft iron armature is connected by the brass wire R to the mica

or isinglass diaphragm M which is screwed under the receiver cap as in the ordinary telephone. During the passage of a fluctuating current through the winding W the soft iron armature A is thrown into vibratory motion and the vibrations transferred to M. *A prominent feature of this receiver is the fact that the armature A is under no magnetic strain until a fluctuating current flows through the winding W.*

The fundamental principle of operation is as follows: The diagram, Fig. 195b, shows the direction of the lines of force of the permanent magnet through the pole pieces, and as will be observed the flux divides equally between both sides of the "U" shaped poles and continues through the magnet. Due to this division of flux, there is no strain on the armature A, a condition just opposite to that found in the ordinary telephone receiver. where the diaphragm is drawn toward the core of the magnet and held under considerable tension.

If current flows through the winding in a given direction and the permanent magnet were removed, the resultant flux would have the direction indicated by the arrows, Fig. 195c, that is, the direction of the flux would be lengthwise of the winding and would circulate in the direction shown. Under such conditions, the armature would be equally attracted to the lower and upper pole pieces and remain in a neutral position.

If a direct current, let us say, circulates through the winding from an external source, as in Fig. 195d, then the lines of force issuing from the permanent magnet and from the electromagnet will oppose in some parts of the magnetic circuit, but in other parts of the circuit they will flow in the same general direction. In the particular example cited, the fluxes will oppose on the left hand side of the upper pole piece and in consequence the lines of force will flow to the right hand pole piece and from that point on circulate through the core of the permanent magnet, as shown by the long arrows.

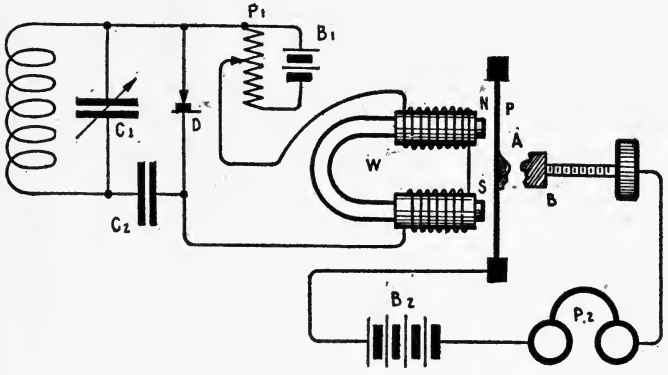

Fig. 196—Diagram Showing the Principle of Microphonic Relay.

The effect of this will be to attract the armature A to the left hand side of the lower pole piece and to the right hand side of the upper pole piece and the mica diaphragm will then be deflected upward. If current is passed through the winding in the opposite direction, the actions just described will be reversed and the diaphragm will be deflected in the opposite direction. The entire action is thus seen to be much similar to a polarized relay.

The sensitivity of this telephone can be accounted for first, by the fact that the magnetic circuit is one of low reluctance; second, the armature of the magnet is under no strain until current passes through the receiver winding, hence a greater deflection of the diaphragm is obtained; third, the armature is acted upon at both ends and since the flux is produced differentially like that in a polarized relay, the deflection for a given magnetizing current is accordingly increased.

151. Microphonic Relays or Sound Intensifiers.—A microphonic relay has been developed for intensifying the currents flowing in the local circuit of a wireless telegraph receiver, but owing to the difficulty experienced in maintaining the instrument in a permanent state of adjustment, it has not been commercially adopted.

A working idea of the relay may be obtained from diagram, Fig. 196, wherein the telephones are removed from the local circuit of a given receiving set and the microphonic relay winding W substituted. Immediately in front of the magnet is placed a diaphragm which may be tuned mechanically to the spark frequency of the transmitter.

The diaphragm carries the carbon button A; the second carbon button B is attached to an adjustable screw, the two buttons being placed in light contact with each other. A local battery of 1½ to 6 volts is joined in series with the microphonic contact

and the circuit continues through the head telephones P-1. During the reception of radio signals the vibration of the diaphragm P causes greater vibration of the diaphragm of the head telephone P-2 due to the larger value of current flowing through the local circuit than through the circuit of B-1.

If a number of these relays are connected in cascade, the signals will be increased from 20 to 30 times their original strength. Extremely careful adjustment of the microphonic contacts is required for the best response.

152. Brown Amplifying Relay.—A particularly successful microphonic relay has been developed by S. G. Brown. This relay has been employed by the Marconi Company for trans-oceanic communication in connection with carborundum crystals with good results.

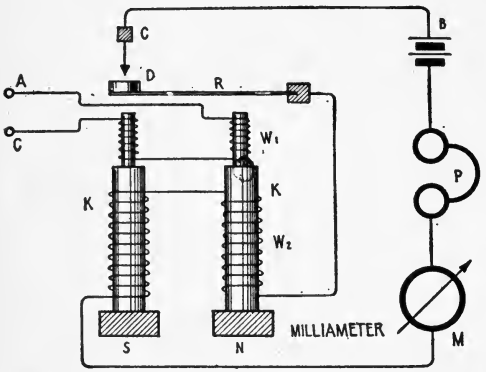

Fig. 197a—Brown Amplification Relay for Increasing Radio Signals.

The approximate mechanical construction and the electrical circuit of one type is shown in Fig. 197a, where the soft iron cores K, K, are magnetized by a permanent magnet with the poles N and S. A fine wire winding W-1 encircles the upper end of the core and a larger magnet winding W-2 the lower end. Directly above the core of W-1 is a steel vibrating tongue R carrying the contact D, which touches lightly contact C, the latter being adjustable by a screw. The contact mounted on the screw adjustment is made of a special osmium-iridium alloy and the other contact is a button of carbon which, when pressed lightly against the upper point constitutes a *microphone*. Winding W-2, telephone P, dry cell battery B, are all connected in series with the microphonic contact. The current to be amplified enters winding W-1 at A and C and the resulting change of flux in the core of the magnet moves the vibrating tongue R, which, in turn, varies the current of B, causing sounds in the head telephone. The amplitude of the vibration of R is increased by the current of battery B circulating through the winding W-2. In other words, the fluctuating microphone current is repeated back to the magnet through winding W-2 and the vibrations of R magnified accordingly.

If three or four of these relays be connected in cascade considerable amplification of the incoming signal will be obtained. For the cascade connection, the telephones are removed from the local circuit of the first relay and another winding of the second relay like that of W-1 connected in its place, and so on throughout the series.

A small milliameter M is connected in series with the telephone and when the current flow is 8 to 12 milliamperes, the relay is in the most sensitive adjustment.

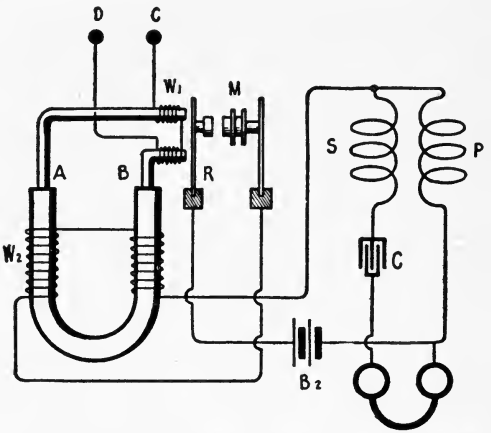

Fig. 197b—Supersensitive Brown Amplification Relay.

A Brown relay of another type is shown in Fig. 197b, where M is a microphone chamber filled with carbon granules, the pressure on which can be carefully regulated by means of an adjusting screw. The vibrating tongue R is acted upon by the flux of the poles A, B, and the corresponding fluctuations of the battery B-2 not only circulate through the windings W-2 and thereby amplify the vibrations of R, but these currents also pass through a step-up transformer, having the primary winding P and the secondary winding S. The current induced in S flows to the condenser C (of about 2 microfarads capacity) and through the head telephones. The battery B-2 is one of about 6 volts pressure.

Like the first type described, several of these relays may be connected in cascade for progressive amplification of the incoming radio signals.

153. Atmospheric Electricity.—When the aerial wire of a radio station is suspended above the earth, it not only absorbs a certain amount of energy from passing electric waves, but it will be set into oscillation by irregular discharges of so-called *atmospheric electricity* which is termed throughout the United States *"static"* and in foreign countries *"atmospherics"* or *"strays."*

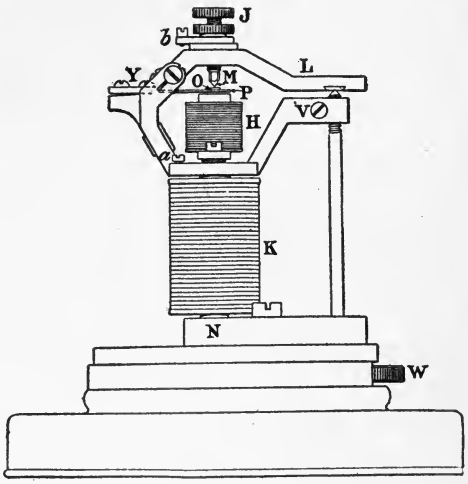

Fig. 197c—Details Brown Relay.

During the spring, summer and autumn in the northern zones of the United States the potential of the air seems to be higher than that of the earth and in consequence a discharge takes place through the aerial conductors to earth at irregular intervals. This induced current causes a crackling, irregular sound of more or less intensity in the telephones of the receiving set which may interfere to a marked extent with the reception of radio signals.

Widely varying theories exist as to the probable origin of static discharges, but a considerable amount of this interference is quite likely set up by nearby or far distant electric storms. Just as the transmitter of a radio station sets up electrical oscillations of more or less damping, in the receiver aerial, so also the discharge of lightning between two oppositely charged clouds or between the clouds and the earth sets up a highly damped electric wave which will set practically any receiving aerial into vibration at whatever frequency it happens to be adjusted.

Static electricity is especially prevalent in tropical countries and in the northern zones of the United States during the summer months of the year, but during the night hours it is apt to be strong in the northern zones during the colder months of the year.

To reduce the interference of static the transmitting apparatus is designed to produce a spark note of high pitch having a more or less musical tone. The dots and dashes can then be readily distinguished at the receiving station due to the difference in the pitches of the interfering static discharges and that of the spark at the transmitting station. Modern transmitters employing current of 500 cycles produce a musical spark permitting communication to be carried on under conditions when it would not be possible with a spark note of irregular pitch such as is obtained with irregularly acting spark gaps.

When the receiving apparatus is connected to very large aerials, severe static discharges are obtained day or night throughout the year and in order to carry on communication through this interference, a transmitter of very great power that will permit the signals to be heard above the static discharges is employed.

Various local appliances have been devised to overcome the interference of static, but none have been so far highly successful. Balancing circuits have been devised by the Marconi Company with which they have achieved good results (described in following paragraph).

With ordinary receiving apparatus, the operator, at any given radio station, may partially reduce static interference by employing the least possible degree of coupling between the primary and secondary windings of the receiving tuner, the respective windings being mechanically drawn apart to a distance consistent with the strength of signals in the head telephones. Occasionally static interference can be minimized by throwing the primary and secondary circuits out of resonance or in case a carborundum rectifier is employed as the detector, by the application of an abnormal local E. M. F.

With sensitive receiving apparatus, such as the repeating three-element oscilla-

tion valve or the step-up valve amplifier, the static signals are enormously amplified and the good effects of these receivers are often thus offset. Hence when atmospheric electricity is especially severe, radio traffic may be more readily dispatched from station to station by means of a less sensitive receiving detector, such as the carborundum rectifier or by the Marconi magnetic detector.

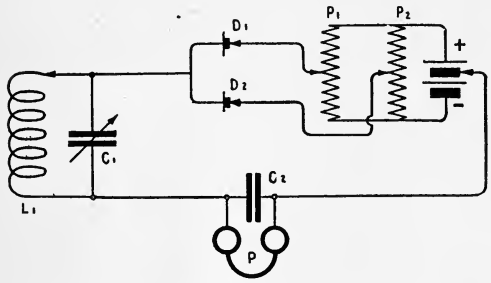

Fig. 198—Circuits of Marconi's Balanced Crystal Receiver. (English Marconi Company.)

An interesting aspect of the static interference is the fact that it does not persist at certain months of the year in certain localities, being strong for a period of several days and then sometimes disappearing for a space of a week or more. This may be followed by a period of several days, during which the interference from this source is exceptionally strong, but, as stated previously, the high pitched note of modern transmitters to a large extent overcomes the difficulty.

154. The Marconi Balanced Crystal Receiver (English Marconi Company).—No apparatus or circuit has so far been devised to completely eliminate the interference of static discharges. However, communication can be effected by the circuits of the Marconi balanced crystal receiver when with ordinary circuits it would not be possible. In fact, the balanced crystal tuner often reduces the interference from this source to a marked degree.

The complete circuits of the balanced crystal receiver are shown in the diagram, Fig. 198, where the secondary winding of the receiving tuner is represented by the coil L-1, the secondary condenser at C-1, the opposed crystals at D-1 and D-2, the potentiometers at P-1 and P-2, the battery at B and the telephones at P.

To carry out the fundamental principle of this receiver, crystals D-1 and D-2 must have like volt-ampere characteristics, and, accordingly, crystals are specially selected for the purpose.

Briefly, the action of this circuit can be described as follows: If crystals D-1 and D-2 are adjusted to the same degree of sensitiveness, their currents will act equally and oppositely upon the telephone P, and no signals will result. If, however, D-2, let us say, is adjusted to a high degree of sensitiveness and D-1 to a lesser degree, signals will be received.

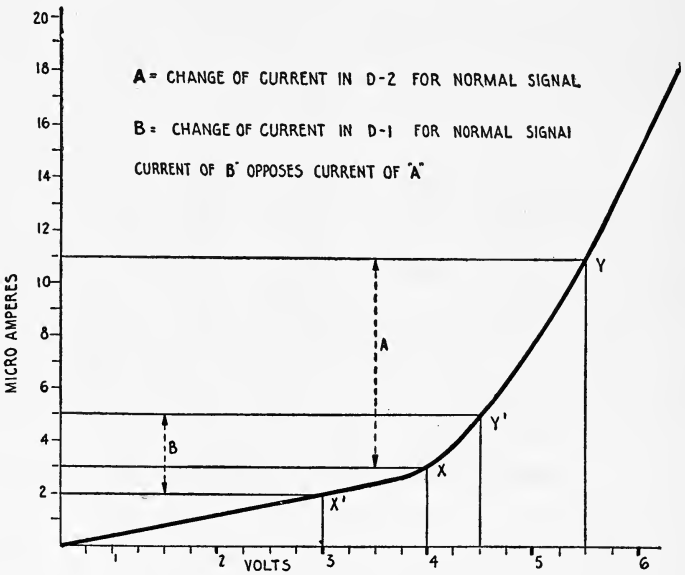

Fig. 199—Curve Showing Principle of Balanced Crystal Receiver.

Under these conditions, if an extra severe discharge of static excites the aerial circuit, almost equal effects are produced in the head telephone P by both crystals, and the crashing sounds ordinarily experienced are partially eliminated.

The real effect of the balanced crystal receiver is to limit the sound produced in the head telephones, advantage being taken of the peculiarities of the volt-ampere characteristic curve. This can best be explained by the curve, Fig. 199, where the point X represents the adjustment of the potentiometer P-2 for the crystal D-2, that is, it is the point where the addition of a slight antenna E. M. F. will cause the current in the head telephone circuit to increase to the point Y. On the other hand, point X^1 (lower down on the curve) is the adjustment corresponding to the crystal D-1, where it will be seen that the same value of antenna voltage which will cause a large increase of current in detector D-2 will cause but a small increase of the current through the local circuit of detector D-1. The current corresponding to D-1, is shown at Y^1 on the curve (which is really a negative current).

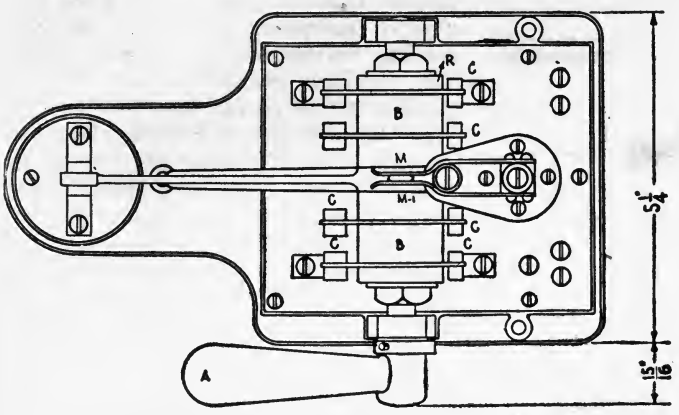

Fig. 200a—Plan of Type I Aerial Changeover Switch. (Amn. Marconi Co.)

Hence the current of crystal D-2 predominates, and although signals will be received from any given station, they will not equal in strength the signal to be obtained by the use of one crystal.

If an extra severe discharge of static strikes the receiving aerial, due to its extraordinary intensity, the current in the local circuit of detector D-1 reaches approximately the same maximum as in D-2, or, in other words, the current increases to approximately point Y on the curve, but the current of D-1 opposes that of D-2, and hence both detectors act almost equally and oppositely on the receiving telephone, and the crash of the static discharge will be largely annulled. The intensity of strong radio signals will be reduced in the same manner.

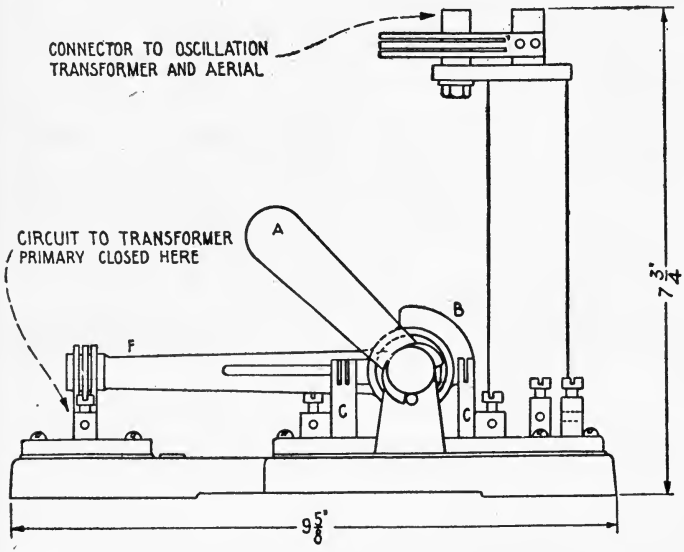

Fig. 200b—Elevation of Type I Aerial Changeover Switch.

The adjustment for obtaining the best operating characteristic of this combination is readily obtained by a skilled operator. First, the sensitive spots on crystals D-1 and D-2 are located, followed by corresponding variation of the sliding contacts of the potentiometers P-1 and P-2.

155. Type I Aerial Changeover Switch.—A plan view and side elevation of this switch appear in Figs. 200-a and 200-b, respectively. Several steel discs, B, which make connection with the spring contacts C on either side of the rod, are mounted on a hard rubber rod R. When the handle A is thrown downward a long

steel bar F closes the circuit to the primary winding of the power transformer through the contacts 11 and 12. In the opposite position the bar separates the spring contacts M, M¹ 200-a, which disconnects the transmitting oscillation transformer from the aerial during the period of reception, preventing the incoming oscillations leaking to earth. *The various circuits closed by the discs mounted on the hard rubber rod place the detector and head telephone on short circuit during the period of transmission. They may also be employed to start and stop a motor blower or an automatic motor starter.* The type I switch is supplied with Marconi transmitting sets up to 5 K. W. capacity.

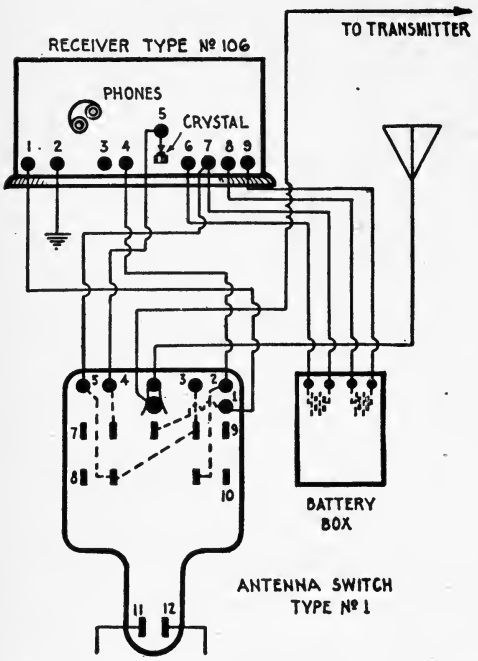

Fig. 201—Type I Switch Connected to Type 106 Receiving Tuner.

For the use of operators in the Marconi service, the circuit diagrams, Figs. 201, 202 and 203, are published, showing the connections in Fig. 201 of the type I antenna switch to the external binding posts of the type 106 receiving tuner, and in Fig. 202 the connections of the type S, H, aerial changeover switch to the external binding posts of the type 106 tuner. The diagram, Fig. 203, shows the connections of the type I antenna switch to the external binding posts of the type 107-a receiving tuner.

In the diagram, Fig. 201, binding posts 2, 4 and 5 of the type I antenna switch short circuit the crystal detector and the head telephones during transmission. Binding post No. 1 connects to aerial binding post No. 1 of the type 106 tuner. Contacts 11 and 12 close the circuit to the primary winding of the transformer. The binding posts 6, 7, 8 and 9 of the type 106 tuner are connected to the four binding posts of the battery box as shown.

In the diagram, Fig. 202, posts 1, 2, 4 and 5 of the type S. H. antenna switch lead to contacts which place the head telephone and detector of the type 106 tuner on short circuit. Binding posts 11 and 12 close the circuit to the primary winding of the transformer.

In the diagram, Fig. 203, posts 2, 4 and 5 of the type I switch lead to contacts which short circuit the receiving detector and the receiving telephones. These diagrams should be carefully studied and in event that the wiring is taken down, the connections shown should be carefully duplicated.

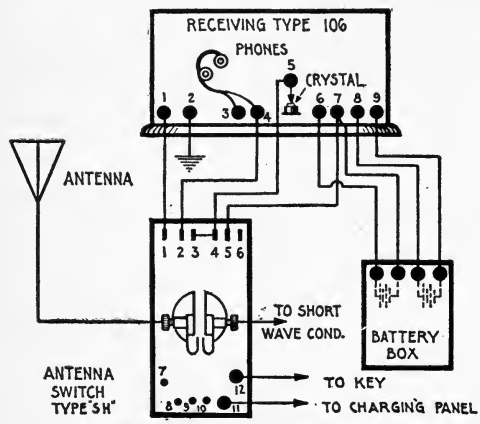

Fig. 202—Type S H Switch Connected to Type 106 Receiving Tuner.

156. Type 112 Receiving Tuner.—This receiving tuner was primarily designed for use with the special ¼ K. W. cargo type transmitter developed by the Marconi Company and fundamentally is similar to the type 101 and type 106 tuner, but the construction is considerably simplified. A front view is shown in Fig. 203-a and a side view in Fig. 203-b.

As will be seen in the wiring diagram, Fig. 203-c, the circuits are similar to those shown in Fig. 153-b, the potentiometer, battery and head phones being shunted

around the fixed condenser. A buzzer test circuit is placed in inductive relation to the earth lead and the buzzer is thrown into operation by means of a small push button mounted on the front of the panel.

The *receiving transformer* is of the inductively coupled type consisting of a two-layer primary and a two-layer secondary winding, the inductance of the primary winding being regulated by a "tens" switch and a "units" switch. The "unit" switch cuts in ten single turns in the primary winding and the "tens" switch ten turns at a time

The inductance of the secondary winding is altered by a simple multi-point switch. The *secondary shunt condenser* consists of two concentric brass tubes, which are telescoped by a small knob in the slot on the top of the panel.

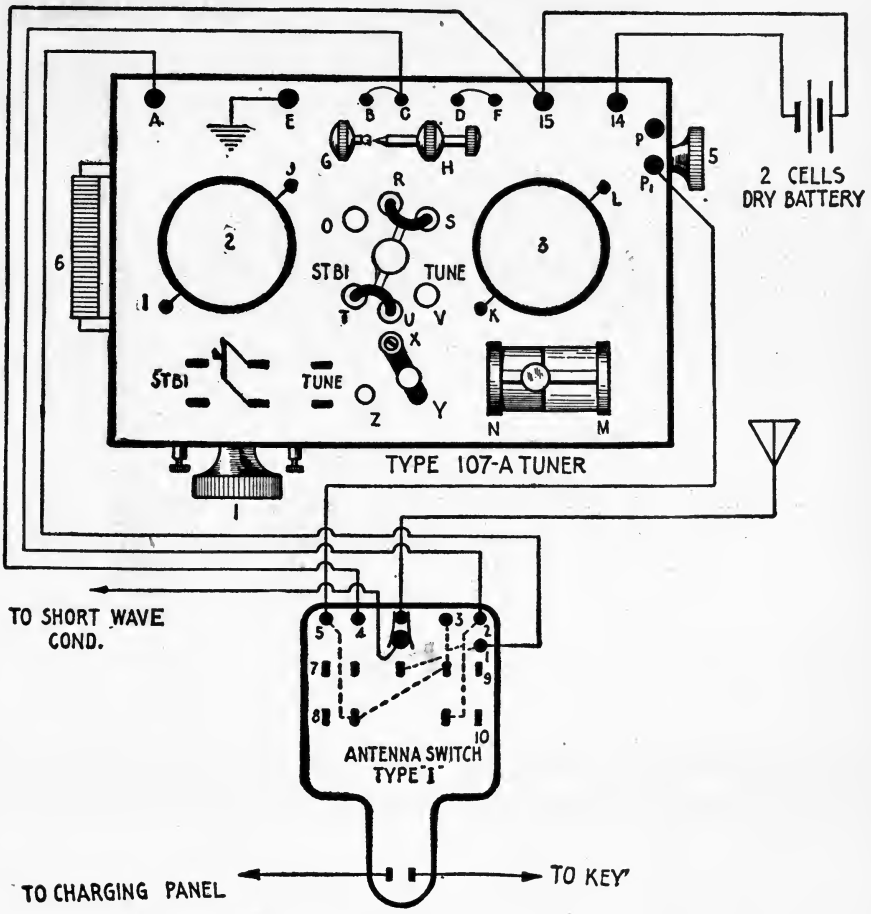

Fig. 203—Type I Switch Connected to Type 107a Receiving Tuner.

The *coupling* between the primary and secondary windings is altered by a knob sliding in the lower slot to the front of the panel. When the knob is placed to the extreme left the coupling is maximum, lesser degrees being obtained by moving this knob in the opposite direction.

The *series antenna condenser* is thrown in the aerial circuit by means of the switch marked "condenser-in-out." This condenser is of fixed value, the necessary adjustment for resonance being obtained at the primary inductance.

The type 112 tuner is fitted with a carborundum detector, the latter being mounted immediately to the front of the panel. The local battery current for the crystal is turned on and off at the switch marked *"battery-on-off."* This switch should always be in the "off" position when the receiver is not in use.

A sensitive spot is found on the crystal by pressing the push button and "feeling about" on the crystal with the pointed contact until the loudest response is obtained, simultaneous adjustment being made of the potentiometer.

The receiving transformer is adjusted to the incoming signal as follows:

(1) **Adjust detector by buzzer tester.**
(2) **Place the coupling knob as far to the left as possible.**
(3) **Vary inductance of the primary and secondary windings progressively until the desired station is heard.**
(4) **When signals are heard decrease the coupling slightly.**
(5) **Then retune primary and secondary circuits, using slight values of capacity at the secondary condenser.**
(6) **Then slightly vary the coupling until loud signals are obtained or until an interfering signal is eliminated.**

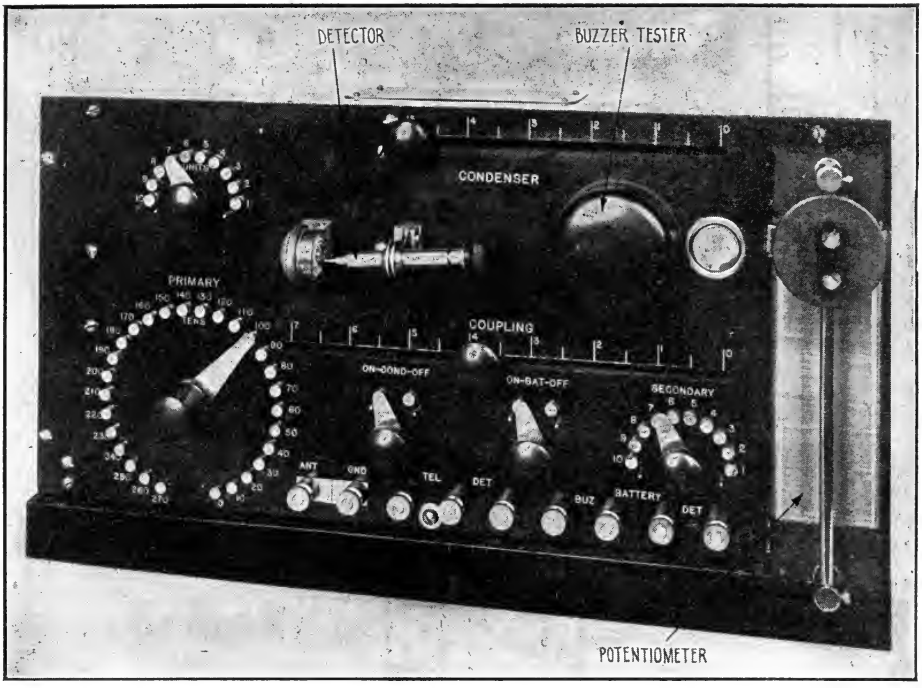

Fig. 203a—Front View of the Marconi Type 112 Receiving Tuner (The American Marconi Company).

156a. **General Advice for the Manipulation of a Receiving Tuner.**—While learning to manipulate a receiving tuner of any type, the student should first study a complete fundamental wiring diagram of the set and note the corresponding parts on the actual equipment. *He should observe particularly the direction in which the inductance, changing switches and the variable condenser control knobs are moved for an increase of their values.* It should always be borne in mind that any increase or decrease of wave length adjustment in the antenna circuit should be followed by a similar increase or decrease in the secondary circuit. Also a change of coupling slightly influences the effective self-inductance of the primary and secondary windings, and therefore if the inductance of either winding is adjusted for a given wave length, and afterward the coupling decreased to minimize interference, a new value of inductance must be selected at the primary and secondary coils; or, if the period of these circuits is varied by means of variable condensers, a slight change in capacitance should be made.

(a) It should be remembered in adjusting a station for the first time that the adjustments of any given tuner will vary with different aerials. If the tuner is also strange to the operator, the best method to pursue is to tune first to the standard 600 meter wave, using a rather large amount of inductance and relying upon the series condenser to vary the antenna wave length to pick up signals, thereafter reducing the inductance and eliminating the short wave condenser until the maximum strength of signals is obtained.

(b) If a call is expected from one of several wireless stations not accurately tuned to the same wave length, close coupling should be employed between the primary and secondary windings and the shunt secondary condenser set at zero, but after communication is established, lesser values of coupling should be employed to prevent interference. (See Section H appendix.)

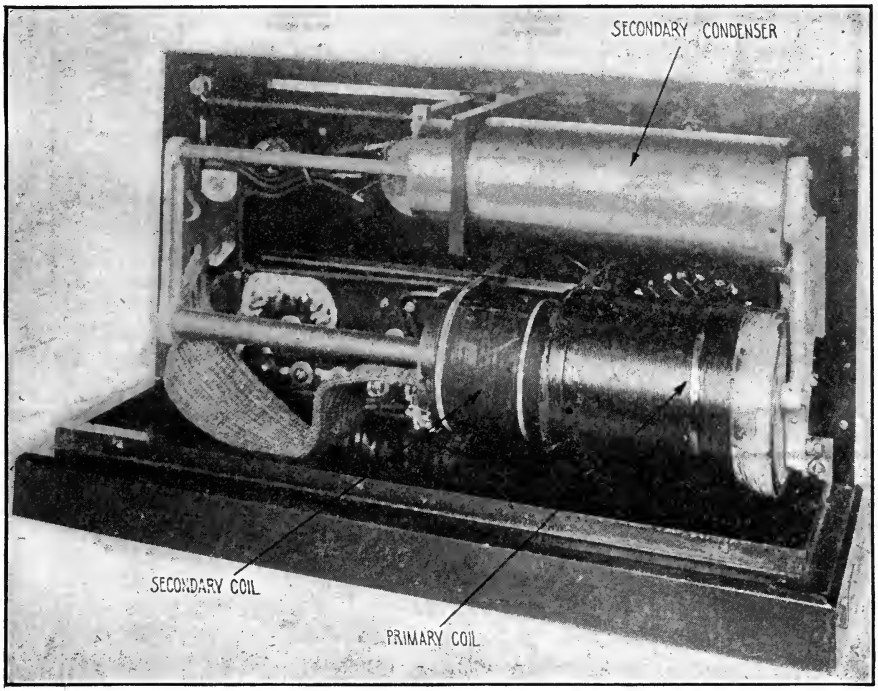

Fig. 203b—Rear View of Marconi Type 112 Receiving Tuner (The American Marconi Company).

(c) Due to the fact that the wave length of the average ship's aerial lies between 300 and 600 meters, only a few turns of inductance are required to adjust the antenna system to the wave length of 600 meters. On the other hand, the short wave variable condenser must invariably be employed to obtain the 300 meter wave with a ship's aerial.

(d) If the tuner is fitted with a primary shunt condenser, increased selectivity may be obtained by proper selection of capacity values, but generally with decreased strength of signals.

(e) Severe discharges of atmospheric electricity may temporarily or permanently destroy the sensitiveness of a receiving detector, hence frequent readjustment is necessary during an operating schedule. These remarks, however, do not apply to a highly exhausted three-element vacuum valve, the magnetic detector, the Fleming oscillation valve, or others which possess a marked degree of stability.

(f) Frequent use of the test buzzer will indicate whether or not the crystal detector is in adjustment. It has been observed that the adjustment of the crystal detector giving good response to a buzzer is not necessarily the most sensitive adjustment for a far distant station, and similarly with most types of receiving detectors, the adjust-

ment giving maximum response to nearby stations, is not the most sensitive adjustment for a far distant transmitting station.

(g) Not all carborundum crystals possess equal degrees of sensitiveness; consequently those giving maximum response to far distant stations should be used.

(h) The maximum degree of selectivity is obtained in receiving circuits of radio-frequency when the loosest coupling which will give a readable signal is employed and when inductance is used to tune the aerial circuit and some capacity is used in shunt to the secondary coil.

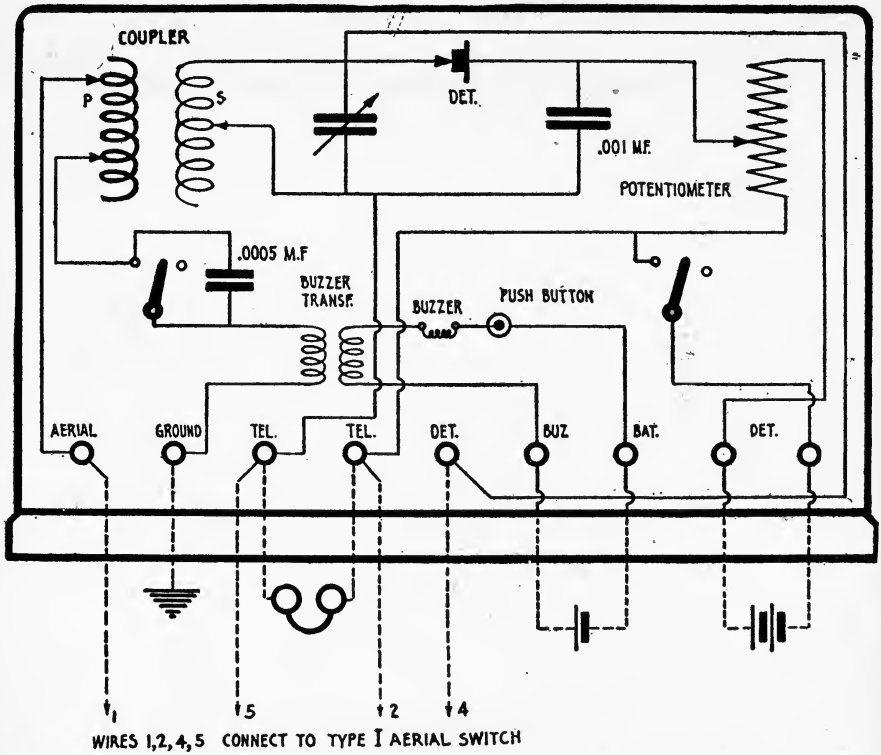

Fig. 203c—Complete Wiring Diagram of the Type 112 Receiving Tuner (The American Marconi Company).

(i) The diaphragms of receiving telephones should frequently be removed and carefully wiped to prevent the formation of rust. Bent diaphragms should be immediately replaced by new ones. The diaphragm should not touch the surface of the magnet.

(j) If in doubt concerning the continuity of the circuits of a receiving tuner, a testing circuit comprising a dry cell battery and a head telephone connected in series should be applied to the primary and secondary coils to ascertain if the circuit is in conductive condition.

PART X.

AUXILIARY APPARATUS OR EMERGENCY TRANSMITTERS.

157. Statute Requirements. 158. Tuned Coil Set. 159. The Electric Storage Battery Company's Accumulators and Charging Panel.

157. Statute Requirements.—The United States Statute (Act of August 13, 1912), requires that all vessels carrying radio equipment be fitted with an emergency transmitter *which can be operated independently of the ship's generator.* This sender must have a daylight transmission range of at least 100 *miles,* and must be capable of functioning continuously for a *period of four hours.* If an independent emergency transmitter is not supplied, a source of auxiliary power of sufficient capacity to operate the motor generator independently of the ship's generator must be available. The regulations of the *International Radio Telegraphic Convention* require the *emergency apparatus to be capable of functioning for at least six hours,* and to have a minimum range of 80 nautical miles in case of a ship having constant radio service, and 50 miles where the ship's station has a service of limited duration.

Certain vessels of the American Marconi Service are fitted with a 60 *cell storage battery of capacity varying from* 60 *to* 224 *ampere hours.* The batteries of lower capacity simply furnish current for the *operation of the motor generator,* but those of higher capacity are employed to operate a few emergency lights as well. The 60 cell battery generally the property of the Steamship Company is under the direct supervision of the Chief Engineer, but the operators of the Marconi Company must have sufficient knowledge of the circuits and the manipulation of the charging panel to keep the batteries in a fully charged condition.

If for any reason, a 60 cell battery is not supplied, an *emergency transmitter* developed by the Marconi Company is employed. This sender consists of a 10-inch *induction coil* operated by a 30-volt storage battery, the induction coil being employed to excite the *condenser* of the power set in place of the usual *high voltage transformer.*

The auxiliary transmitter, originally planned by the Marconi Company, is shown in Fig. 204, where the spark gap of a 10-inch induction coil is connected directly in series with the aerial system, the primary winding being energized by a storage battery of 24 to 30 volts. Provision was made on some ships whereby these coils could be operated either directly from 110 volts D. C., with a special rheostat connected in series or from the storage battery.

The apparatus shown in the circuit of Fig. 204 has been termed the *"plain aerial set"* because the spark gap is connected directly in series with the antenna circuit. The use of the plain aerial transmitter is not allowed by the United States regulations except in case of emergency, because when no extra inductance is inserted at the base of the antenna system, a *highly damped wave* is radiated which will interfere with the dispatch of traffic between other stations.

158. Tuned Coil Set.—When the induction coil is employed to excite the closed circuit condenser as in Fig. 205, it is called the *"tuned coil set."* The great advantage of this connection lies in the fact that the antenna oscillations will be damped out less rapidly than with the *"plain aerial"* connection, and the radiated wave will cause less interference to the operation of other stations.

A description of the circuits follows: The apparatus of the power set is represented by the alternator armature A, C, the primary winding of the closed core transformer P, the circuit including the wattmeter W. The secondary circuit comprises the secondary winding of the transformer S, the high potential condenser C-1, spark gap G and the primary winding of the oscillation transformer P-1. The aerial circuit is represented by the secondary winding S-1, the short wave condenser C-2 and the aerial tuning inductance S-2.

The *circuit of the emergency induction coil* extends from the D. C. switch at the left of the drawing, though the *underload circuit breaker B,* through the *regulating resistance R,* to a 24-30-volt *storage battery* shunted by a small *voltmeter V.* The charging resistance R is proportioned to pass from 6 to 7 amperes through the storage battery during the charging process. The function of the underload circuit breaker has been described in Part V, and it is sufficient to say here that it automatically opens the circuit in case the voltage of the generator falls below that of the storage battery.

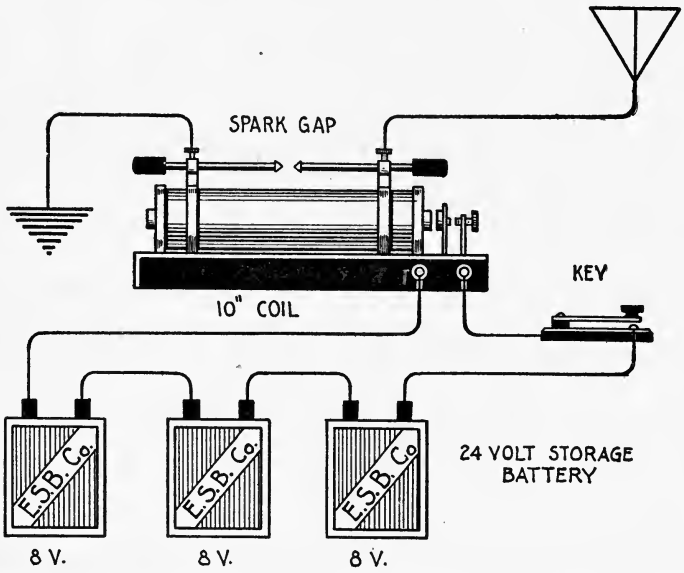

Fig. 204—"Plain Aerial" Emergency Transmitter.

(*a*) *Adjustment and Tuning of the Set.* To place the storage battery on charge, the D. C. switch is closed and the plunger U of the underload circuit breaker pushed upward by hand, the charging circuit thereby being closed through the contact points E, E.

The circuit from the battery to the induction coil may be traced through the telegraph key, through the primary winding of the induction coil P-3, and thence through the interrupter I, the vibrator condenser being represented at K. In order that a uniform spark discharge may be obtained, careful adjustment must be made of the stationary contact of the interrupter I until a discharge free from arcing is secured, but generally at its best the pitch of the note produced by these coils will be rather low.

In case of accident to the power apparatus, such as the burning out of the motor generator or the high potential transformer, the emergency transmitter is put into action in the following manner: The switch H-2 is placed in the downward position. This connects the telegraph key in series with the primary winding of the induction coil. Next the plug contac

R-4 is removed from the connector R-1 and plugged into R-3, thereby connecting the secondary winding of the induction coil to the condenser C-1. (A single blade double-throw high voltage switch is often used instead of the flexible plug connector.) After these connections have been made, the telegraph key is pressed and the *vibrator of the induction coil adjusted* simultaneously until uniform interruptions are secured. Generally with this connection, it becomes necessary to reduce the length of the spark gap G, and in case a quenched spark gap is employed, to use no more than two or three plates. If a rotary gap is included in the power transmitter, it must be stopped with the spark electrodes in such position as will afford a discharge gap of the correct length for the coil. Since the closed and open oscillation circuits of the transmitter are already adjusted to resonance, the complete process of tuning need not be gone over again, with the exception that the coupling between the primary winding P-1 and the secondary winding S-1 may have to be increased.

The ammeter connected in the antenna circuit of this set should read from 2 to 3 amperes, depending upon the electrical dimensions of the circuits of radio-frequency, or, in other words, the type of set. The range of transmission varies from 125 to 225 miles in daylight.

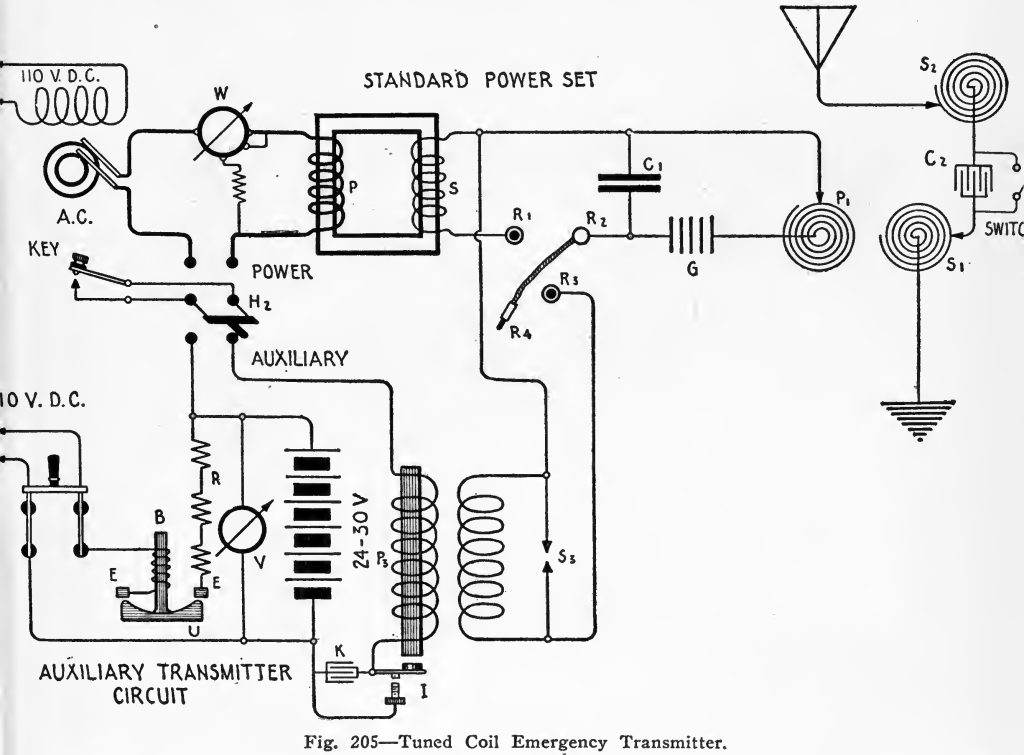

Fig. 205—Tuned Coil Emergency Transmitter.

The coil transmitters are generally supplied with the portable chloride type D-5 accumulator of the Electric Storage Battery Company, but later installations are equipped with another type known as the 5 K. X. portable accumulator, either battery being of 60 ampere hours capacity.

The general instructions given for the chloride battery in Part V, apply to the batteries of these sets, and should be carefully observed. It will be noted from the diagram of Fig. 205 that the battery can be placed on charge with the induction coil in operation. As a safety measure, to prevent the meter being burned out by electrostatic induction from the transmitter, the voltmeter circuit contains a small strap key, which must be closed to take a reading of the voltage of the cells.

159. The Electric Storage Battery Company's Accumulators and Charging Panel.—The type and rating of the Exide cells furnished by the Electric

Storage Battery Company for auxiliary power is shown in the following table:—

TYPE	RATING
60 cell 7 PV—	72 ampere hours;
60 cell 11 NV—	140 " "
60 cell 13 MV—	168 " "
60 cell 17 MV—	224 " "

Type 7 PV battery is employed in connection with the ½-kilowatt panel transmitting set, type P-5 of the Marconi Company. The other types are for operation of the 2-kilowatt, 500-cycle motor generators furnished with Marconi type P-4 set and also for auxiliary light aboard the vessel.

A photograph of the E. S. B. Co.'s charging panel is shown in Fig. 206, and a fundamental diagram of the connections from the board to the batteries and motor generator in Fig. 207. The latter diagram includes the complete connections of the Marconi 2-K. W. 500-cycle Crocker-Wheeler type of motor generator, and the automatic starter. Fig. 208 shows a rear view of the wiring of the panel.

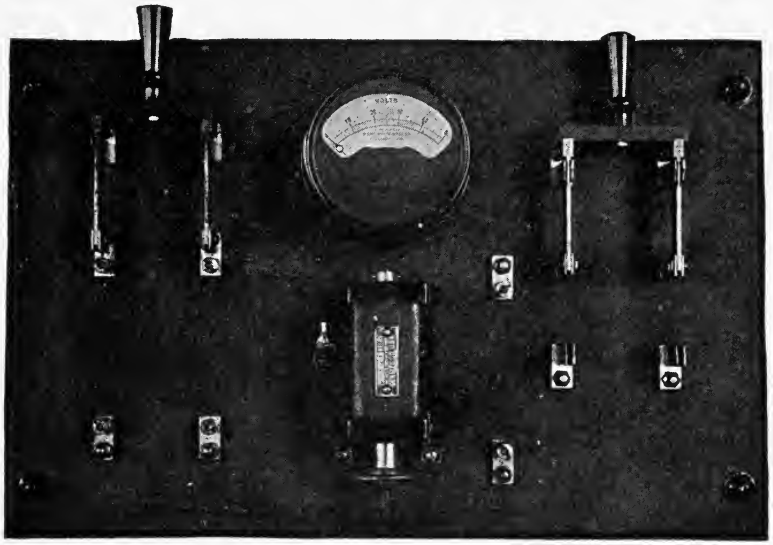

Fig. 205a—Charging Panel Used with Marconi Tuned Coil Sets.

In the diagram of connections, Fig. 207, the connections for the voltmeter and the double-pole double-throw switch and other switches for auxiliary lighting service are purposely left out to simplify the drawing, but a detail of the voltmeter connection appears in Fig. 208.

Returning to the diagram of Fig. 207: All apparatus concerned in the charge and discharge of the batteries appear to the left of the drawing, and the circuits of the automatic starter to the right, including the wiring of the motor generator. *A six-pole double-throw switch, with knife-blades,* 1, 2, 3, 4, 5, 6, when thrown up in the drawing or to the left on the actual charging panel, *places battery units A and B on charge, but in the opposite position, on discharge,* the circuits from the battery continuing through the blades 5 and 6 to the automatic starter and motor generator.

The resistance coils R-1, R-2 and R-3 are connected in the charging circuit of battery A, through the knife blades 1 and 2 and coils R-4, R-5 and R-6, through the blades 3 and 4 to battery B. *The overload circuit breaker* K is connected in series with the common charging lead of battery units A and B. The winding of the no-voltage release magnet for this breaker indicated at N has the series protective resistance R-1. Contacts C-1 and C-2 mounted on

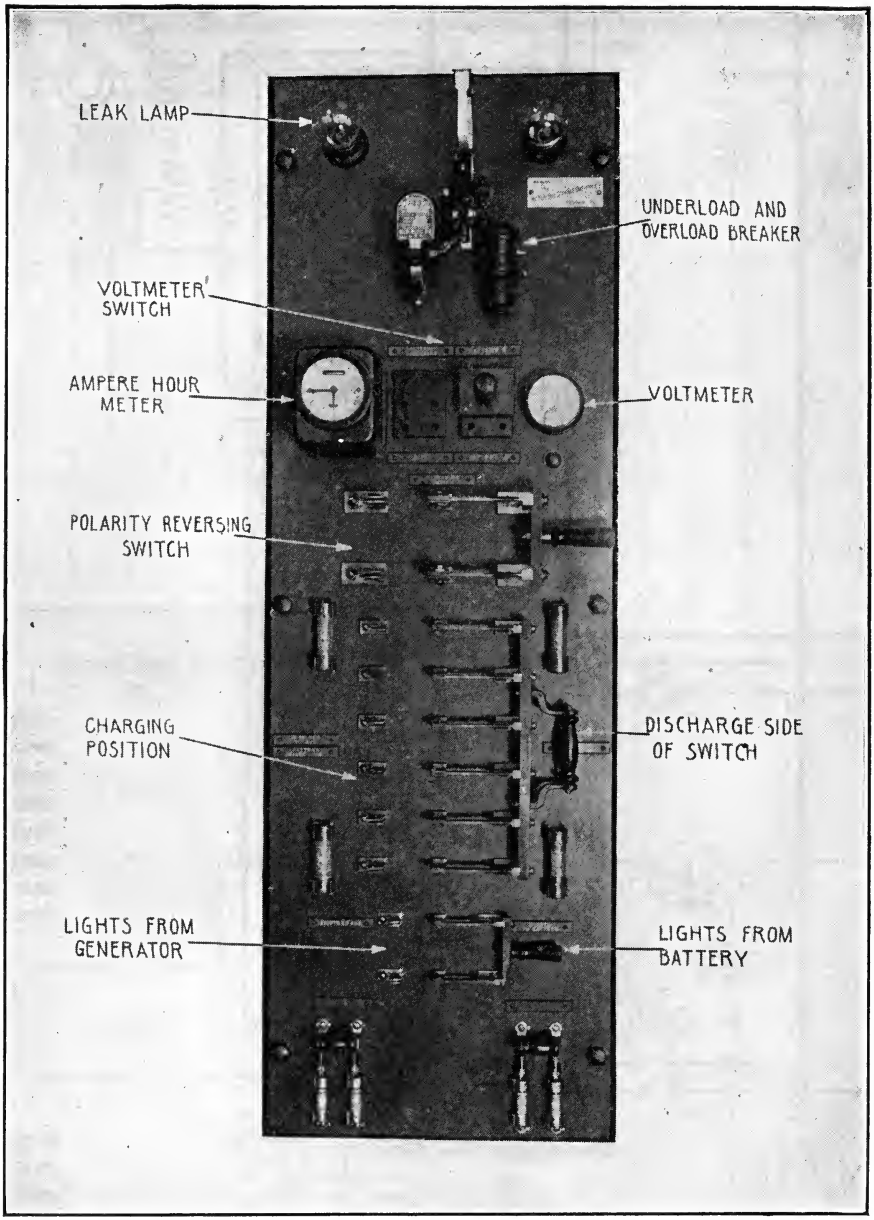

Fig. 206—Standard Charging Panel Supplied by the Electric Storage Battery Company for Marine Use.

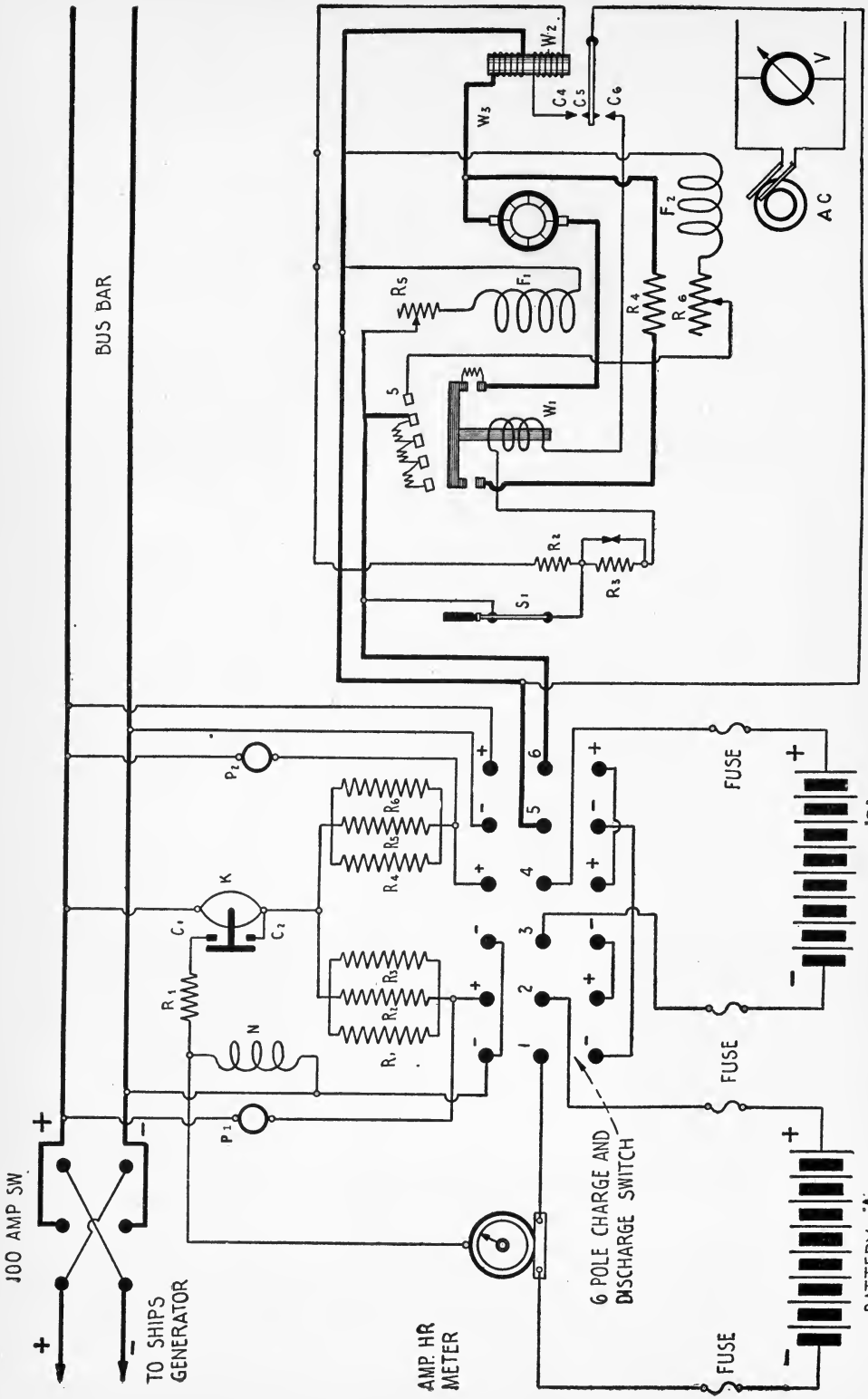

Fig. 207—Fundamental Wiring Diagram of Electric Storage Battery Charge Rectifier

the circuit breaker open the circuit of the no-voltage release magnet when the breaker trips. It should be thoroughly understood that this breaker will open the charging circuit in case of an overload during the charging period, or in case the voltage of the generator falls below the voltage of the battery. The breaker will also open when the pointer on the ampere-hour meter touches the contact point at the zero position (during the charging process).

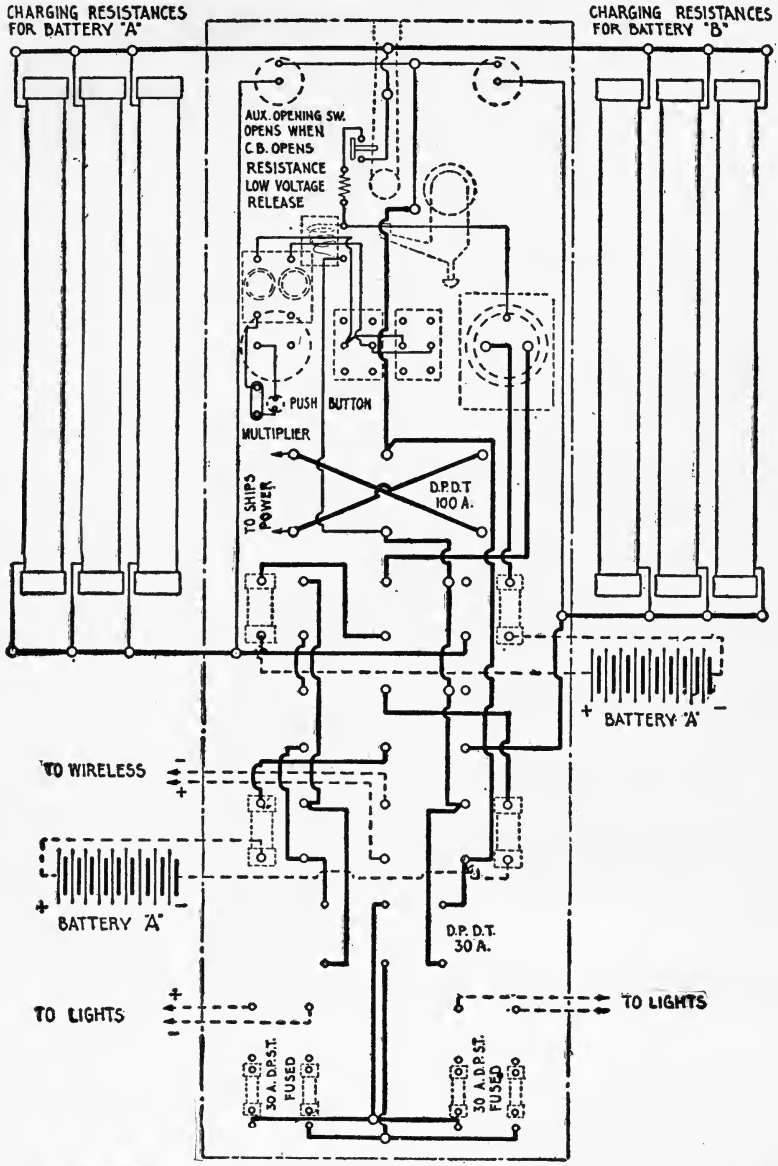

Fig. 208—Rear View Actual Wiring Diagram of Electric Storage Battery Company's Charging Panel.

P-1 and P-2 are 25-*watt incandescent lamps* which are shunted around the circuit breaker and the resistance units. Through these, a small value of charging current constantly flows through the cells, compensating for *local losses,* such as may be caused by local action or a slight surface leakage of the cell.

An important part of this apparatus is the double pole double throw reversing switch placed in the upper left-hand corner of the drawing. Should the connections from the ship's generator to the switchboard be reversed, say, during repair or rewiring, the correct polarity can always be obtained by plugging in the voltmeter connection to the power line, followed by closing this switch. *If the pointer of the meter moves in the proper direction or across the scale, the polarity of the charging mains is correct. If the pointer moves in the wrong direction, the double-pole switch must be thrown in the opposite direction.* Protective fuses are inserted in the battery charge and discharge circuits to open the circuit in case of overload.

The general operating instructions for the Exide cells given in Part V should have careful attention. The operator should aim to keep the batteries in a fully charged condition at all times, or confining the remarks to daily practice, the *pointer of the amperehour meter should always be near to the zero position and if after use of the battery the pointer indicates that a given quantity of current has been taken out, it should be placed immediately on charge and allowed to remain so until the pointer returns to the zero position of the scale of the amperehour meter.*

One part of this circuit may require explanation. It will be observed that the amperehour meter is merely connected in series with one of the battery units (Battery A) when on charge. The necessity for this connection will be evident from the following explanation: If the meter were connected in series with both battery units, the pointer of the amperehour meter would travel across the scale at double the rate of the actual charging current flowing to each battery unit for the reason that the batteries are connected in parallel. As an example, if the amperehour meter were connected in series with both battery groups on charge and further that a quantity equal to ten ampere hours of current passed from the generator to the battery, each set of cells actually would receive but five amperehours of the charging current, or, in other words, the meter would indicate a value actually double the charging current supplied to each group of cells. Hence the amperehour meter is simply connected in series with one unit on charge, but in series with both units on discharge, the assumption being made that the two battery units are in identical states of charge. Any dissimilarity in the two groups of cells can easily be determined by the readings of the voltmeter during load and proper correction made therefor. In actual commercial practice, no difficulty is found in keeping both battery units in the same state of charge from month to month.

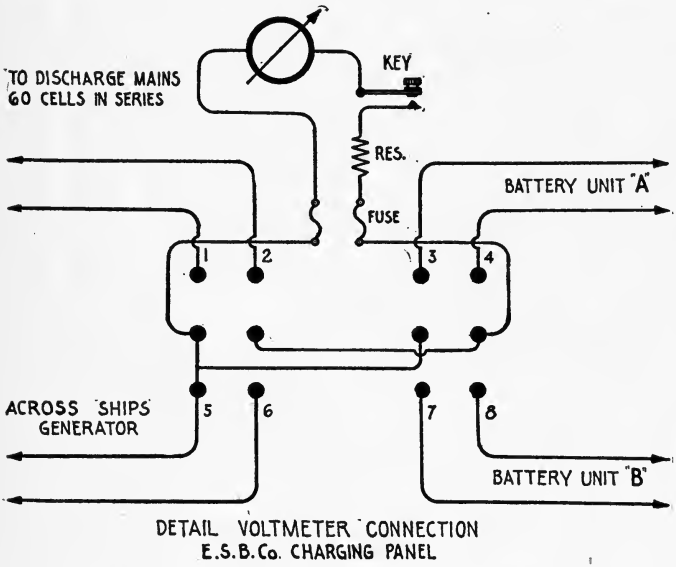

Fig. 209—Detail Voltmeter Connection, Electric Storage Battery Company's Charging Panel.

A detailed diagram of the voltmeter plug switch is shown in Fig. 209. It will be noted that a small push button key, connected in series with the voltmeter, must be closed in order to take the reading. A small resistance or multiplier is connected in series as the drawing indicates.

Plugs 1 and 2 connect to the terminals of the 60-cell battery with all cells connected in

series. Plugs 3 and 4 connect across the terminals of battery unit A. Plugs 5 and 6 connect to the mains from the ship's generator. Plugs 7 and 8 connect to the terminals of battery unit B.

Although the circuits of the motor generator and automatic starter indicated in Fig. 207 have been gone over in the chapter on motor generators, the notations in Fig. 207 for the same circuits will now be explained.

S-1 is the motor starting switch which may be closed by auxiliary contacts on the aerial changeover switch or by a small push button switch near to the transmitting key of the operator. R-3 is the fixed resistance in series with the automatic starter winding W-1, which is thrown in the circuit when the starter is in the full running position, that is to say, it is connected in by the upward movement of the plunger. Resistance R-2 is connected in series with the relay winding W-2 to prevent an excessive flow of current. Relay winding W-3 is connected in series with the motor armature and in case of an overload, automatically opens the solenoid winding W-1 through the contacts C-5 and C-6. R-4 is the electrodynamic brake resistance thrown in shunt to the armature when the plunger of the automatic starter drops downward.

F-1 is the shunt field of the motor, the regulating rheostat R-5 being connected in series. F-2 is the generator field winding with the regulating rheostat R-6 connected in series. This circuit is closed by the automatic starter at point 5, or, in other words, current does not flow through the generator field winding until the motor has attained normal speed.

It is believed that with the information supplied in this and Chapter 5 at hand, commercial operators will fully understand the circuits of emergency battery panels and transmitters and will be enabled to handle them successfully in commercial working.

Vessels fitted with radio apparatus by affiliated Marconi companies may have storage cells and charging panels which differ in mechanical construction, but fundamentally they operate along the same general principles. Specific instructions for each type of cell or panel are, of course, furnished to marine radio installations by the manufacturer.

Operators of the Marconi Service should observe carefully the following rules:

(1) **Keep battery plates covered with pure water at all times.**
(2) **Keep the batteries fully charged.**
(3) **Do not place battery on charge when ship's generator is not running.**
(4) **Watch the polarity of the charging line and throw reverse switch on charging panels accordingly.**
(5) **Examine the connections between all battery cells frequently.**

In reply to the query of the United States Government operators' license examination for a diagram of an auxiliary transmitting set, the student should show the circuits of the charging panel of a 60 cell storage battery unit, since the diagram of the tuned coil emergency transmitter will not be accepted by the U. S. examiners.

The diagram, therefore, of Figure 207 to which should be added the voltmeter connections of Figure 209 will be entirely satisfactory. The student should bear in mind that Figure 207 includes the circuits of the Marconi 2 K. W. 500 cycle motor generator and automatic motor starter as well as the fundamental connections of the charging panel.

PART XI.

PRACTICAL RADIO MEASUREMENTS.

MEASUREMENT OF WAVE LENGTH—DECREMENT—CALIBRATION—TRANSMITTING AND RECEIVING APPARATUS.

160. The Importance of Electrical Resonance. 161. Indicators of Resonance. 162. Uses of the Wavemeter. 163. Simple Use of the Wavemeter. 164. General Instructions for Tuning a Radio Transmitter. 165. Tuning by the Hot Wire Ammeter. 166. Tuning the 2 K. W. 500 Cycle Panel Transmitter. 167. Determination of Coupling. 168. Plotting of Resonance Curves. 169. Measurement of the Logarithmic Decrement of Damping. 170. Calculation of the Decrement of the Wavemeter (or Decremeter). 171. Wavemeter as a Source of High Frequency Oscillations. 172. Calibration of the Secondary and Primary Circuits of a Receiving Tuner. 173. Calibration of the Open and Closed Circuits Simultaneously. 174. Measurement of the Natural Oscillating Period of a Coil. 175. Measurement of Electrostatic Capacity. 176. Measurement of the Effective Inductance of a Coil at Radio Frequencies. 177. Calculation of Inductance from the Constants of the Coil. 178. Measurement of the Effective Inductance and Capacity of an Aerial. 179. Calibration of a Wavemeter from a Standard. 180. Measurement of Mutual Inductance at Radio Frequencies. 181. Comparative Measurement of the Strength of Incoming Signals. 182. "Tight" and "Loose" Coupling. 183. Measurement of High Voltages. 184. Tuning and Adjustment Record.

160. The Importance of Electrical Resonance.—It is essential *that the open and closed oscillation circuits of both the radio-transmitter and receiver be substantially adjusted to the same natural frequency of oscillation.* To place circuits of radio-frequency in resonance or to adjust them to any desired frequency of oscillation, standard resonating circuits known as *wave meters* are employed. In a previous chapter we have explained that a hot wire ammeter may be employed for determining conditions of electrical resonance in two coupled circuits, but there is a disadvantage in this method of tuning, for unless the inductance and capacity of each circuit are known, the resulting frequency of wave length corresponding thereto, cannot be determined; hence the utility of the wave meter.

A circuit like that shown in Fig. 210a, consisting of a *radio-frequency inductance L and a variable condenser C* constitutes *an oscillating circuit* of variable frequency, the actual value for any particular setting of the variable condenser being determined by the equation:

$$N = \frac{5{,}033{,}000}{\sqrt{LC}}$$

where L and C are expressed in centimeters and microfarads respectively. Hence at each division of the condenser scale, we might mark the particular frequency at which the circuit oscillates when set into excitation. *But since a given frequency of oscillation corresponds to a wave of definite length* (if the oscillator were radiative), we can calibrate the scale of the instrument directly in wave lengths rather than in oscillation frequencies.

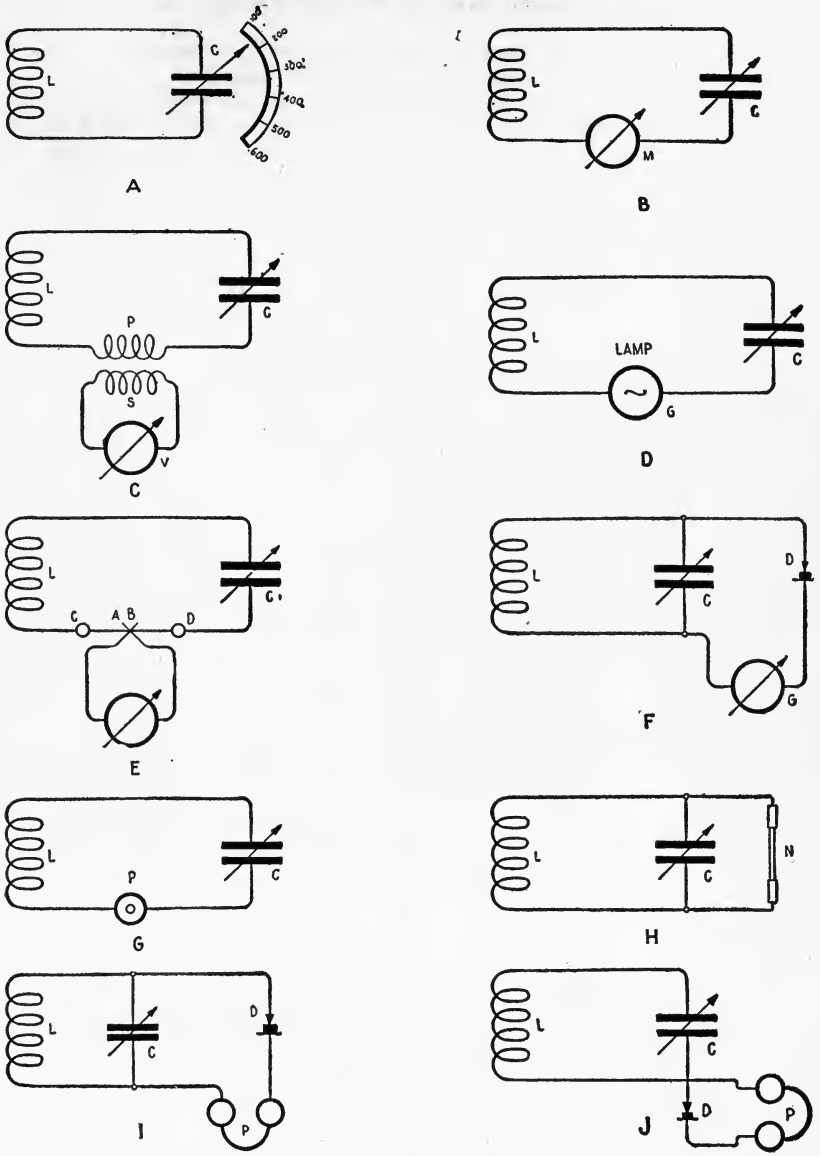

Fig. 210a, b, c, d, e, f, g, h, i, j—Methods for Determining Resonance Between Wavemeter and Circuit Under Measurement.

If either the inductance of the coil or the capacity of the condenser in the circuit, Fig. 210a, is variable, we may fit the variable element with a scale of wave lengths and the instrument will then be called a *wavemeter*.

Now if the coil L is placed in inductive relation to any part of an active oscillation circuit, such as the closed or open circuit of a radio transmitter, radio-frequent oscillations will be induced in the circuits of the wavemeter when it is adjusted to the frequency of the gen-

erating circuit. Some indicator of maximum flow of current or maximum voltage must now be inserted in the circuit (of the wavemeter) in order that the exact point of resonance on the variable element may be located.

161. Indicators of Resonance.—That the wavemeter is in resonance with the circuit under measurement, may be determined by one of several instruments.

In Fig. 210b a *milliammeter M*, range 0-200 milliamperes, is connected in series with the wavemeter for determining the adjustment of maximum current flow.

In Fig. 210c, a *small hot wire wattmeter W*, range .01-0.1 watts, is connected to the secondary winding S, of a small step down transformer, the primary P being connected in series with the wavemeter.

In Fig. 210d, a *small glow lamp G* (2 or 4 volt battery lamp), is connected in series with the wavemeter, the resonant adjustment being determined when the lamp glows brightest (with the wavemeter in a fixed position).

In Fig. 210e, a *thermo-couple A, B,* is attached to a heating wire C, D, the latter being connected in series with the wavemeter. The terminals of the thermo-couple are connected to a sensitive milli-voltmeter which may be calibrated in milliamperes.

In Fig. 210f, a *rectifying detector D* is connected in series with a galvanometer G, both being shunted across the condenser C. The currents of radio-frequency are converted by the rectifier to direct current and the resonant adjustment is determined by the maximum deflection of the galvanometer.

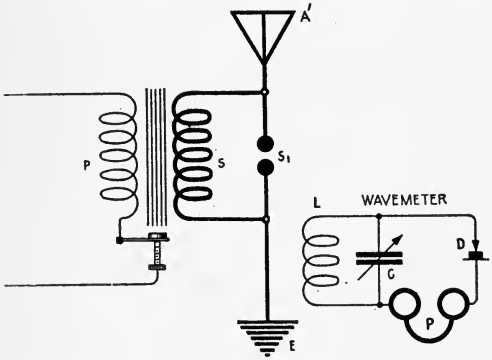

Fig. 211—Diagram for Measuring the Natural Wave Length of an Aerial.

In Fig. 210g, an *electrostatic telephone P* is connected in series with the wavemeter, the telephone being an active part of the oscillation circuit. The telephone contains a winding of three or four turns placed underneath a copper diaphragm. The maximum sound is obtained when the wavemeter is in resonance with a given oscillation circuit, the copper diaphragm moving with the group frequency of the transmitter.

In Fig. 210h, a *tube N, filled with neon gas,* has sealed-in terminals at either end. When shunted across the terminals of the wavemeter condenser, the tube glows brilliantly at resonance.

In Fig. 210i, a *crystal rectifier* D is connected in series with a 2,000 ohm telephone P, the final two terminals being shunted across the condenser C. The maximum of sound is obtained in the telephone at resonance. The connection of 210j is often preferred because the calibration of the wavemeter is not affected by the presence of a shunt detecting circuit as in 210i. The uni-polar connection of the detector has the disadvantage that the wavemeter must be placed in closer inductive relation to the circuit under test than with the connection of 210i.

The inspectors of the American Marconi Company prefer either the hot wire wattmeter, or the crystal detector and head phones as indicators of resonance above all others.

162. Uses of the Wavemeter.—The wavemeter may be employed:

(1) To place two or more circuits of radio-frequency in resonance;
(2) To measure the wave length of the closed or open oscillation circuits of a radio transmitter.
(3) To determine the percentage of coupling between the closed and open circuits of a transmitter;
(4) To determine the decrement of damping;
(5) To calibrate a receiving set (by means of an exciting buzzer);
(6) To determine the wave length of a distant transmitting station at the receiving station.
(7) To determine the purity of the wave emitted from the antenna.

163. Simple Use of the Wavemeter.—A simple use of the wavemeter is shown in the diagram, Fig. 211, wherein the natural wave length of an aerial is to be measured. In the diagram, Fig. 211, S is the secondary winding of an induc-

tion coil fitted with a vibrator, S-1 a spark discharge gap of simple design connected in series with the aerial A-1. L is the inductance coil of the wavemeter; C the variable condenser; D a crystal rectifier, and P the head telephone.

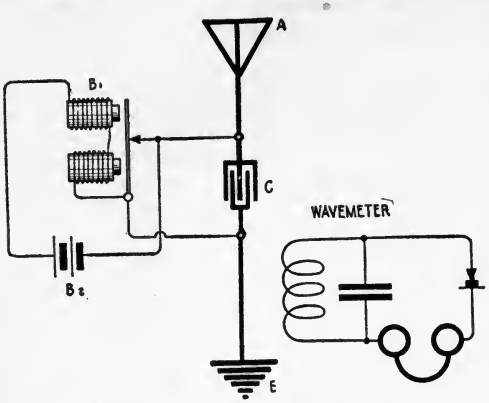

Fig. 212—Showing How an Aerial May Be Set Into Excitation by Buzzer.

When the induction coil is set in operation a spark discharge takes place at S-1, the aerial circuit being traversed by groups of oscillations at a frequency determined by the distributed values of inductance and capacity of the aerial, or,

$$N = \frac{1}{4\sqrt{LC}}$$

and a corresponding wave motion is propagated through space.

Now if the coil of the wavemeter L bears the correct inductive relation to the aerial wire, preferably placed near to the earth lead, oscillations of maximum amplitude will be induced in the wavemeter circuits when the wavemeter and the aerial circuit are in exact resonance. With the spark discharging at S-1 the capacity of the wavemeter condenser is varied until a clear distinct sound is heard in the head telephones at a definite setting (of the condenser). The wave length tabulated on the scale underneath the pointer is that of the circuit under test.

Generally the resonant adjustment of the wavemeter is sharply defined, so that a slight change in capacity will cause the signals to disappear. During this measurement, the operator should take care to distinguish between the currents induced in the wavemeter by the oscillations flowing in the antenna circuit and those set up by electrostatic induction from the induction coil. The sounds in the telephone due to the radio-frequent oscillations are heard at a distinct setting of the wavemeter condenser, but the sounds caused by simple transformer induction can usually be heard over the entire condenser scale. More accurate readings can be obtained by placing the coil of the wavemeter close to the earth lead of the transmitter although when measuring the fundamental wave length of the usual ships aerial, by use of a sensitive crystal rectifier, the wavemeter can be placed 200 or 300 feet from the aerial, provided the inductance coil bears the correct inductive relation to the antenna.

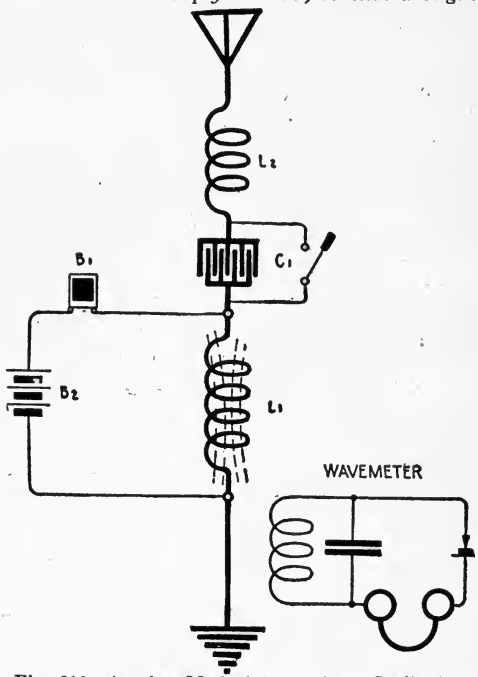

Fig. 213—Another Method for exciting Oscillations in an Antenna by Buzzer.

164. General Instructions for Tuning a Radio-Transmitter.—In order to tune a radio-transmitter to the international standard wave lengths, the following measurements must be taken:

(1) The natural or fundamental wave length of the aerial;
(2) The wave length of the closed oscillation circuit;
(3) The wave length of the radiated wave.

After the open and closed circuits have been coupled, we must determine:

(1) Purity and sharpness of the radiated wave;
(2) The decrement of damping.

(*a*) *Measurement of the Open Circuit.* One method of setting the aerial into excitation and measuring the natural or fundamental wave length was shown in Fig. 211, but there are several alternative methods by which the antenna may be set into oscillation.

In the method shown in the diagram, Fig. 212, a condenser C of one microfarad capacity is connected in series with the aerial and also across the vibrator of a buzzer B-1 energized by the battery B-2. The counter E. M. F. of the buzzer windings places an electrostatic charge on the aerial which discharges at practically its natural frequency. The capacity of C being very large compared to that of the aerial, the wave length of the system is not appreciably altered.

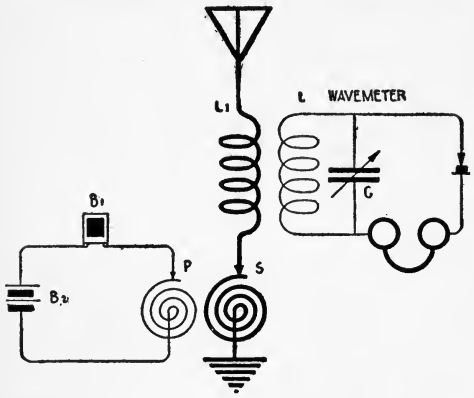

Fig. 214—Buzzer Excitation Circuit Inductively Coupled to an Aerial.

With the buzzer adjusted for clear tones, the wavemeter, fitted with a crystal rectifier, is placed in inductive relation to the earth lead and the capacity of the wavemeter condenser varied until a maximum of sound is obtained in the telephone.

In the diagram, Fig. 213, a few turns of wire are inserted at L-1 through which the circuit of the battery and buzzer is completed. When the current flowing from B-2 is interrupted by the buzzer, a change in the strength of the magnetic field takes place about L-1, placing a charge on the aerial system which discharges at its natural frequency.

A somewhat similar arrangement is shown in Fig. 214, wherein the buzzer circuit is inductively coupled to the aerial circuit through the transformer P, S, the winding S, consisting of a few turns of wire. The wavemeter is placed in inductive relation to some part of the open circuit and the wave length noted by adjusting the wavemeter to resonance.

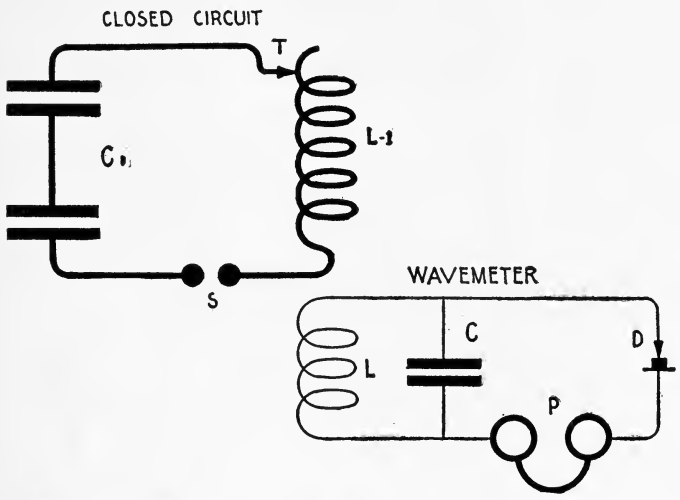

Fig. 215—Showing How the Wave Length of a Closed Oscillation Circuit is Measured.

The aerial frequently is set into excitation by connecting the antenna and earth wire of an aerial system across the vibrator of a buzzer, but this method of excitation is not as satisfactory as the connections of the two methods shown previously.

To tune the aerial in either of the foregoing diagrams to the *standard wave of* 600 *meters,* turns of inductance are added at winding L-2 until the wavemeter indicates the wave length to be 600 meters. Generally from 10 to 20 microhenries of inductance are included at L-1 to constitute the secondary winding of the oscillation transformer, the additional turns required for any standard wave being added in the aerial tuning inductance.

The aerial is tuned to the 300 *meter wave* by connecting the short wave condenser in series with the aerial system. A reading is then taken on the wavemeter, to note the reduc-

tion of wave length. If the length of the wave exceeds 300 meters, turns are taken out at I-2 until the standard wave is obtained. *Certain aerials encountered in practical radio have excessive length for radiating the 300 meter wave even with the aerial tuning inductance cut out. In a case of this kind, the aerial must be reduced in length or the lead-ins attached to the center of the flat top rather than to one end.*

The correct number of turns for the 450 meter wave are found in the same manner as for the 300 and 600 meter waves. Generally the short wave condenser is cut out of the circuit at this adjustment.

(*b*) *Measurement of the Closed Circuit.* The closed circuit is tuned to the standard waves by placing the wavemeter in *inductive relation to the primary winding* of the oscillation transformer, care being taken to disconnect the open circuit from the secondary winding. The spark is then discharged in the regular manner and the wave length for a given value of primary inductance found on the wavemeter by means of any of the resonance indicators described in paragraph 161.

A diagram of connections for this measurement is shown in Fig. 215. Contact "T" is connected in at various points on the coil until the required wave is found. With transmitting sets of larger rating the capacity of the closed circuit condenser may have to be reduced to obtain the 300 meter wave.

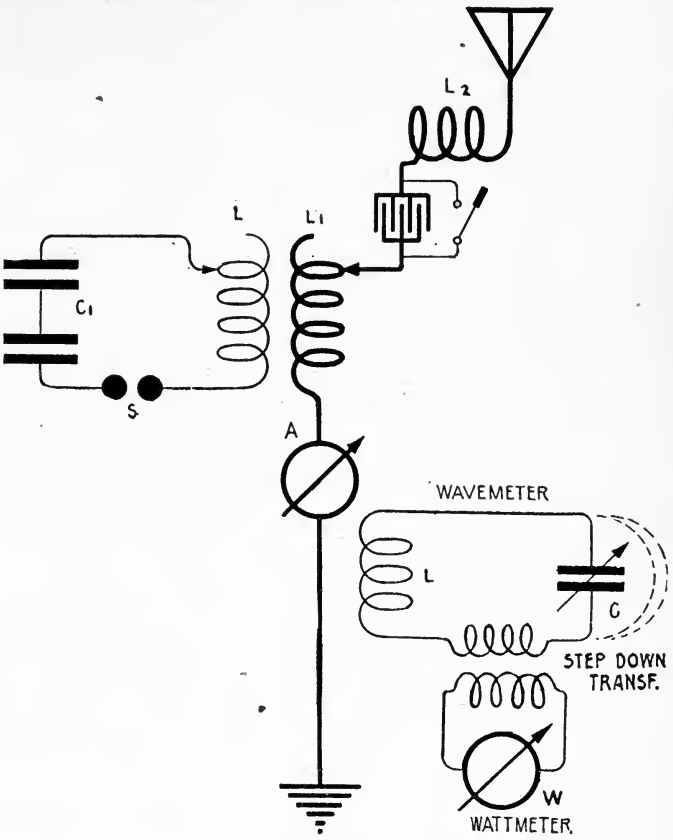

Fig. 216—Showing Method of Determining Length of the Radiated Wave.

(*c*) *Measurement of the Radiated Wave.* The next step in tuning is to ascertain if the emitted wave is *pure* and *sharp* in accordance with the U. S. statute requirements. To determine this, the closed and open oscillation circuits are tuned, inductively coupled and set at the coupling, giving the highest ammeter reading. (Fig. 216.)

Next a test is made to determine if the aerial radiates all its energy at one wave length. If the antenna oscillates at two frequencies, two resonant adjustments will be obtained on the wavemeter and the *relative amplitude of the two frequencies can be measured by a wattmeter "W" connected in the circuit of the wavemeter.* With the wavemeter in a fixed position relative to the antenna, the meter is adjusted to resonance and the relative power at the two frequencies of oscillation observed. Unless this measurement is taken with caution, the wattmeter may burn out if the wavemeter is placed too close to the circuits of radio-frequency.

According to the U. S. regulations, the radiated wave is considered as being pure, when (if the antenna oscillates at two frequencies) the amplitude of the energy corresponding to the smaller wave is 10 *per cent. or less than that in the greater wave.*

To determine the relative power of the radiated waves, the capacity of the wavemeter condenser must be carefully varied, the two maximum readings of the wattmeter corresponding to the two oscillation frequencies being particularly noted. If the wattmeter indicates 0.1 watt at the longer wave, and 0.01 watt or less at the shorter wave, *the wave is pure according to the United States regulations.* If the amplitude of the shorter wave exceeds 0.01 watt, the coupling between the primary and secondary windings must be reduced until the correct current amplitudes are obtained or until a single wave emission results. It is usual to reduce the coupling until the antenna radiates a single wave.

That two waves are being radiated from an aerial can be determined by a crystal rectifier and telephone as well as by the wattmeter, but the relative power of the waves cannot be determined in this way. If a sensitive vacuum valve detector is connected to the wavemeter, the latter can be placed several hundred feet from the aerial. The wave length can be measured with a greater degree of accuracy due to the "looseness" of coupling.

When a ship's aerial is tuned to the standard waves, near to a building with a steel or iron frame, the effective resistance and the natural wave length are appreciably altered; hence, to secure the maximum flow of antenna current, the aerial tuning inductance must be slightly readjusted (when the ship is at sea) until the ammeter indicates a maximum. Similar effects are observed when a ship lies near to another vessel equipped with an aerial, particularly if the aerial of the other vessel is connected to earth. It is preferable to tune a transmitting set at a distance of at least a half wave length from large metallic structures.

We have defined a pure wave according to the U. S. regulations as being one in which, if the antenna oscillates at two frequencies, the energy of the lesser wave will not exceed by 10 *per cent. the energy in the greater wave. According to the same regulations, a sharp wave is one in which the decrement of damping per complete oscillation is* 0.2 *or less. The measurement for the decrement will be described in paragraph* 169.

165. Tuning by the Hot Wire Ammeter.—The open and closed circuits of a transmitting set can be tuned to resonance as follows: *Set the closed oscillation circuit to a definite wave,* or to one of the three standard waves, by means of a wavemeter. *Place the secondary winding of the oscillation transformer in inductive relation to the primary winding.* Follow it by cutting in and out turns at the aerial tuning inductance until the aerial ammeter indicates a maximum of current.

Next *change the coupling* and leave the primary and secondary coils at that position, where a fair value of antenna current is obtained, with the wave emission complying with the law in respect to *sharpness* and *purity*. (The latter is determined by the decremeter.)

The method can be reversed as follows: Set the open circuit to a standard wave by the wavemeter and place the primary winding of the transmitting oscillation transformer in inductive relation to the antenna coil. With the spark discharging at normal power consumption, add or subtract primary turns until the highest possible reading of the aerial ammeter is obtained.

A small glow lamp, such as a 2, 4 or 6 volt battery lamp, shunted by a semi-loop of wire, serves as an indicator of resonance between the open and closed circuits and is often used in case of emergency.

166. Tuning the 2 K. W. 500 Cycle Panel Transmitter.—Detailed instructions for the tuning of the standard panel sets of the Marconi Company will be given in Part XII. The process is quite similar to the tuning of any set, with the exception that *the closed oscillation circuit is tuned to the three standard waves* at the Marconi factory and outside of the determination of the logarithmic decrement all tuning aboard ship can be done by the aerial ammeter alone.

The particular feature of this set is the wave length changing switch, which in a simple operation permits either the 300, 450 or 600 meter waves to be radiated, *the necessary changes of self-inductance, condenser capacity, and coupling being selected by a set of blades making contact with studs leading to various parts of the circuit.* The method of tuning this set will be clear if the following facts are kept in mind:

(1) For any particular wave length adjustment of the transmitter, a critical degree of coupling between the primary and secondary windings gives the maximum aerial current.

***(2) The coupling for the quenched spark discharger can be closer than for the rotary discharger, if the quenched gap is in perfect condition.**

(3) The coupling between the primary and secondary circuits of an oscillation transformer can be varied by increase or decrease of the self-induction of either coil as well as by drawing the coils apart.

When the quenched discharger is in use, the primary winding bears a fixed mechanical position to the secondary winding, but the oscillation transformer is constructed so that they can be drawn apart for use of the rotary gap. For the quenched gap, the requisite coupling for each standard wave is secured, by variation of the secondary inductance, turns being added at the aerial tuning inductance to maintain resonance.

The process of tuning these sets not only consists of adjusting the open and closed circuits to resonance, but also in locating the proper secondary inductance for the maximum aerial current. It is more or less a cut and try method, but the skill obtained through practice enables an inspector to complete the tuning in half an hour. The exact location of the secondary contact clips can be found more rapidly by turning the coupling handle on the front of the panel set, and thereby mechanically placing the primary winding closer to the secondary or farther away. If the primary, for instance, is drawn away from the secondary and the aerial ammeter registers an increase of current, it is an indication that the *coupling for the final fixed position of the windings is too close.* Hence the primary winding is brought back to its original position and turns taken out at the secondary, followed by adding turns at either of the aerial tuning inductances until resonance and maximum reading of the ammeter is secured.

The set should be tuned for the three standard waves, with approximately *three turns* cut in at the continuously variable aerial tuning inductance. After the position of the taps for the secondary winding and the plug aerial tuning inductance are once located, no further adjustment is required, unless some change in the antenna is made. With these sets the complete tuning process can be carried out by observation of the aerial ammeter alone, but the wavemeter should be employed to measure the decrement and to note if two waves are being radiated.

The tuning of the ½ k. w. set is similar to that of the 2 k. w. set.

In the tuning of a quenched spark transmitter, two or even three points of coupling for maximum reading of the aerial ammeter are frequently obtained for a given wave length; the coupling to be finally selected is that giving the maximum value of aerial current. When the rotary gaps of these sets are in use, the primary and secondary windings are separated by a space of 8 to 13 inches, but the coupling position may have to be altered slightly for each of the three standard waves.

167. Determination of Coupling.—It is customary, in transmitting systems employing the plain spark discharger, to express the degree of coupling between the open and closed oscillation circuits in terms of a percentage rather than in terms of the true co-efficient of coupling. *The percentage of coupling is obtained by placing the wavemeter in inductive relation to the aerial and observing the length of the radiated waves.* If the readings of the longer and shorter waves are squared and their values inserted in the following formula, the coupling is obtained, or:

$$K = \frac{\lambda_2^2 - \lambda_1^2}{\lambda_2^2 + \lambda_1^2} \times 100$$

Where λ_2 = longer wave,
λ_1 = shorter wave.

The true coefficient of coupling is obtained from the following formula:

$$K = \frac{M}{\sqrt{L_1 L_2}}$$

Where M = mutual inductance of the oscillation transformer,
L_1 = self-inductance primary,
L_2 = self-inductance secondary.

*Statements (1), (2) and (3) apply to all coupled transmitters of the American Marconi Company.

168. Plotting of Resonance Curves.—A calibration of the closed and open circuits of a radio-transmitter is frequently desired to determine, let us say, the variation of frequency or wave length occasioned by the insertion of a certain amount of inductance. The results of such measurements are plotted on cross-section paper in the form of a curve (or perhaps a straight line). The principal advantage of such plotting lies in the fact that it enables one to take a characteristic set of readings at two or more decisive points and thus determine intermediate values by following the general outline of the curve.

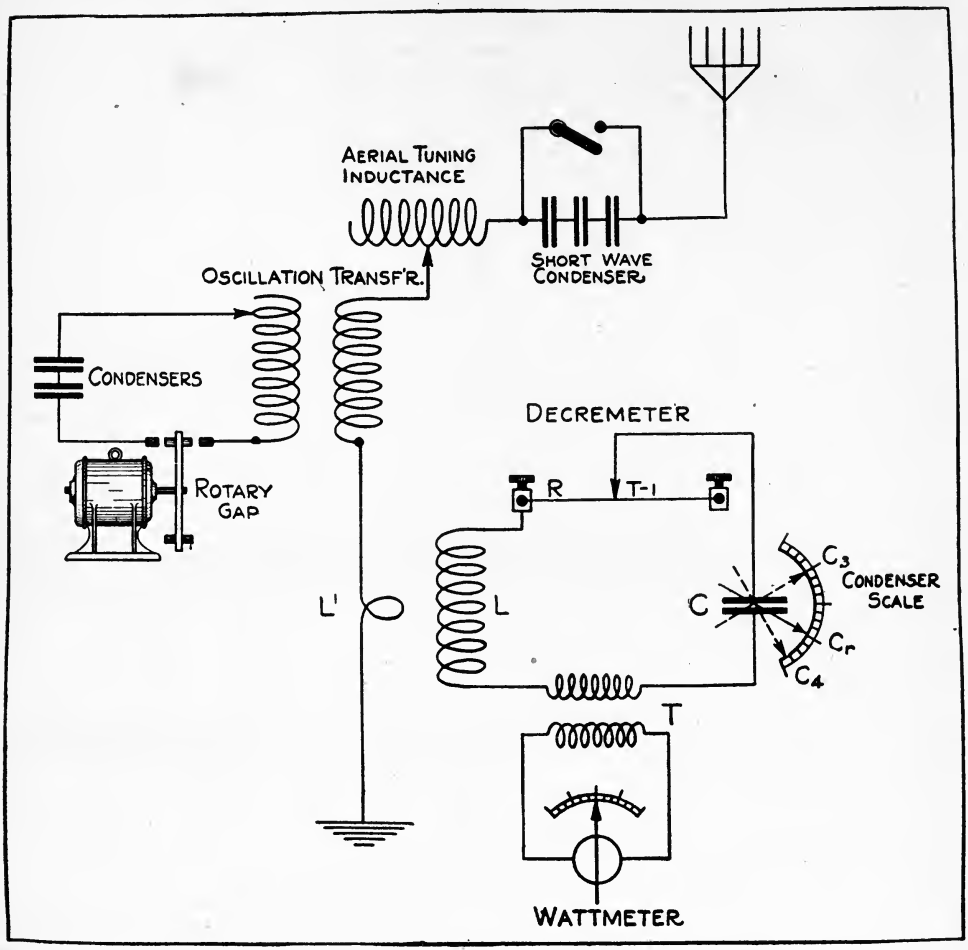

Fig. 217—Complete Apparatus for Measuring Decrement of Antenna Oscillations and Plotting a Resonance Curve.

The resonance curve of the radiated wave of a transmitter is a graphic way of showing the relation between the *amplitude of the current* and *the frequency or wave-lengths* at and near the fundamental frequency. The value of the plotting lies in the fact that it enables the experimenter to obtain, in a general way, *the over-all distribution of energy in the emitted wave, the decrement of damping and the relative power of the two waves, if present.*

To plot the resonance curve of the radiated wave, a wavemeter is required, in series with which is connected either a hot wire milliammeter or a hot wire wattmeter. The milliammeter should have a range of, say 40 to 240 milliamperes, while the wattmeter may have a scale reading of .01 to .1 watt. The latter instrument is preferably connected to the secondary winding of a step-down transformer, the primary winding of which is connected

in series with the circuit of the wavemeter. This transformer, as a rule, is made up of Litzendraht wire, the primary consisting of ten turns wound on a wooden spool, about 1½ inches in length by 1 inches in diameter. The secondary winding consists of five turns of the same wire wound directly over it with a single layer of empire cloth between.

The wattmeter having been connected in the circuit of the wavemeter, a few preliminary trials are made to determine the proper inductive relation between the coil of the wavemeter and the antenna circuit. Care must be taken that the wattmeter is not burned out at the point of resonance. The proper inductive relation having been obtained by trial, the coil of the wavemeter is placed in such position as to give a *near maximum scale deflection of the wattmeter* at the resonant adjustment for the longer wave. If maximum deflection of the wattmeter is obtained at resonance, it is evident that the current will decrease at wave-lengths off resonance, the reduction being dependent upon the *decrement* of the oscillations.

Readings of the indicating instrument having been observed at resonance, another reading is taken at a point off resonance where the wattmeter shows a small scale deflection, say, .01 watt. Similar observations are made at other wave lengths approaching resonance and beyond resonance until a full set of calibrations are secured; that is to say, the observations are continued to a point beyond resonance where a nearly zero deflection of the wattmeter is obtained.

A diagram of connections and the relative positions of the apparatus for this determination are shown in Fig. 217, where the closed oscillatory circuit of a radio transmitter is represented by the primary winding, the high potential condenser and the rotary spark gap. The antenna system includes the secondary winding, the aerial tuning inductance and the earth wire, which preferably has a single turn of wire, L-1, inserted in series. The coil of the wavemeter, L, is placed in inductive relation to L-1 and is in series with the primary winding of the step-down transformer, T, and the variable condenser, C. The secondary of this transformer is connected to a low-range radio-frequency wattmeter.

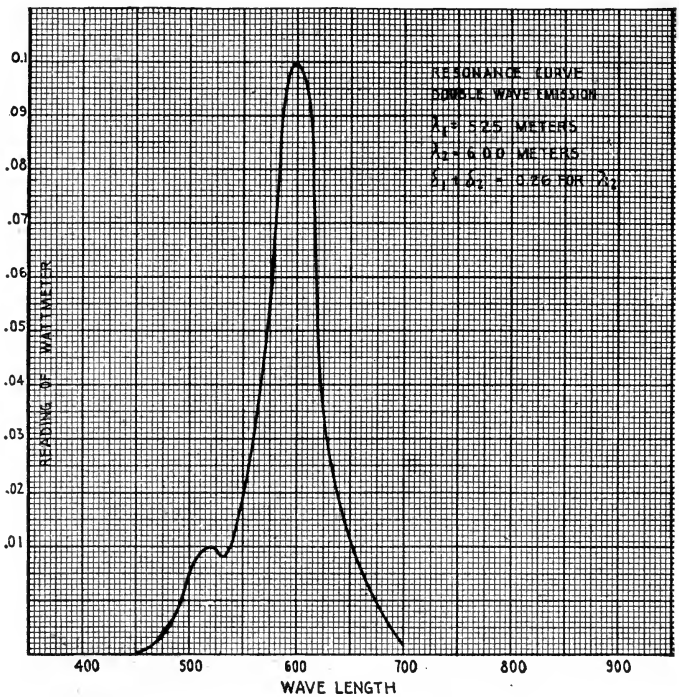

Fig. 218—Resonance Curve of the Antenna Oscillations.

Assume, for example, that the spark is discharging and that the closed and open oscillation circuits are in exact resonance; furthermore, that two positions on the variable condenser which we may call C-1 and C-2 are the points at which the wavemeter is in resonance with the double wave. Then, as the pointer of the variable condenser is moved from zero position toward C-1, the reading of the wattmeter increases, until the point, C-1, is passed, when a decrease takes place. An increase of current again takes place as C-2 is approached followed by a decrease when the point of resonance is passed. If the wave-length of the wavemeter and the corresponding deflection of the hot wire wattmeter be observed over a series of wave-lengths, the data thus obtained may be plotted in the form of a resonance curve in the following manner. (See Fig. 218).

Placing in one column the wave-lengths corresponding to the condenser scale of the wavemeter, and in the second column the corresponding deflection of the hot wire wattmeter,

co-ordinate points are laid off on cross-section paper through which a common line or curve is drawn. A typical set of readings follows:

Wave-length of the wavemeter	Corresponding deflection of the hot wire wattmeter
450	0.0
495	0.005
525	0.01
535	0.009
540	0.01
560	0.03
575	0.05
585	0.08
600	0.1
615	0.085
625	0.05
635	0.03
655	0.01
700	0.00

With the cross-section paper before us, the wave-length readings are laid off horizontally as indicated in Fig. 218 and are known as the abscissas of the points on the curve, while the hot wire wattmeter readings are laid off vertically and are known as the ordinates of the points on the curve. Take, for example, the wave-length of 575 meters; the corresponding

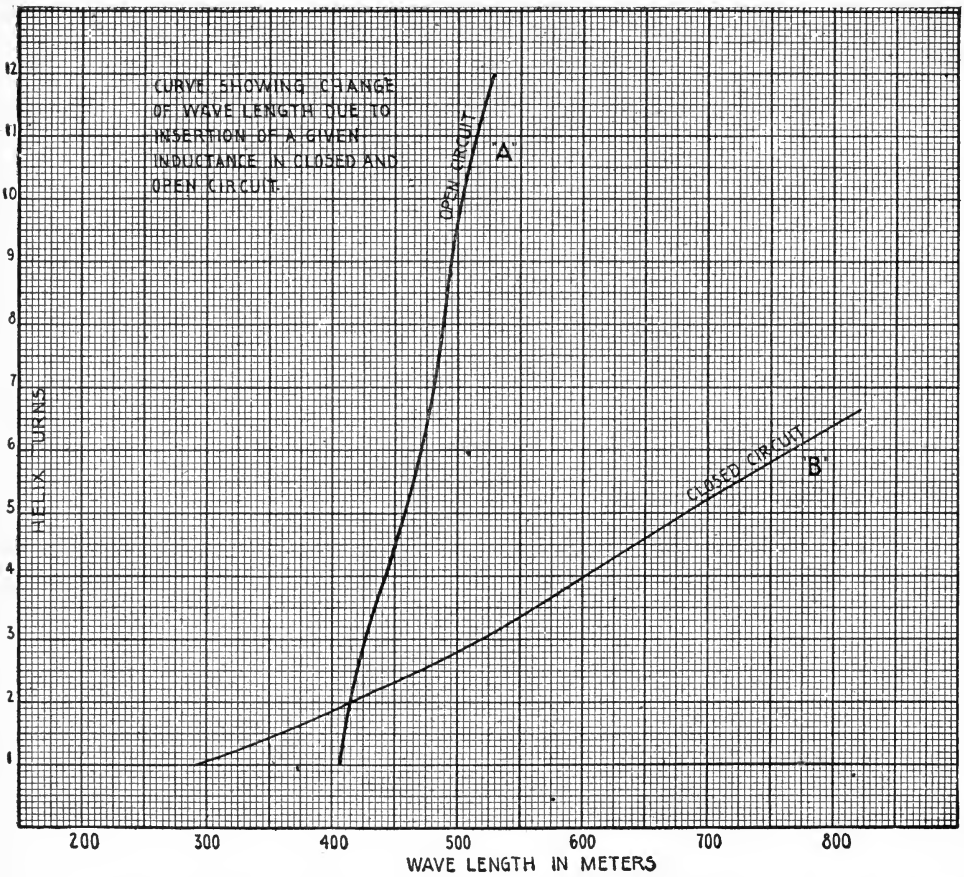

Fig. 219—Curves Showing the Change in Wave Length by Addition of Inductance in a Radio-Frequency Circuit.

hot wire wattmeter deflection is .05. Then follow the vertical line corresponding to 575 until the horizontal line is met corresponding to .05 and place a dot or a cross. Proceed similarly with the entire set of calibrations until all points on the curve are located. Then draw a line joining them.

Now, if the coil, L, of the wavemeter remains in the same position relative to the coil, L-1, and the primary and secondary windings of the *oscillation* transformer, are set at various couplings, the curve in Fig. 218 will become "sharper" or "broader," accordingly, as the coupling is decreased or increased. By means of these curves the relative sharpness of the radiated waves can be compared allowing to some extent a predetermination of the amount of interference to be expected. If the coupling at the oscillation transformer is properly reduced, the lower peak of the radiated wave, which in the curve exists at about 520 meters, may completely disappear and a single sharp maximum peak result. The resonance curve shown in Fig. 218 is not that of a "sharp" wave in compliance with the United States restrictions, unless the decrement of the antenna current is 0.2 or less per complete oscillation. It is, however, "pure" as far as the relative amplitudes of the two waves are concerned.

Should the wavemeter indicate no sharp or defined point of resonance, it may be due to an excess of coupling at the oscillation transformer, to high resistance joints or to poor connections in the antenna circuit. Again, this may be due to leakage across the antenna insulators; the remedy, of course, is obvious.

Using the apparatus employed to obtain data for a resonance curve, the student may obtain data and construct other curves indicating the wave length of the open and closed oscillatory circuits with various turns of inductance cut in at the primary and secondary windings. For example, *if the increase in wave length brought about by adding turns in the closed circuit is to be determined,* the wavemeter is placed in close inductive relation to the primary inductance, but not too close to burn out the wattmeter I. Starting with one turn in the closed circuit, the wave length is determined by observing the wavemeter reading corresponding to maximum deflection of the wattmeter (with spark, of course, discharging). Turns are then added progressively at the secondary (from one to maximum) until a complete set of calibrations are obtained. The results of a typical set of calibrations follow:

Turns	Corresponding wave-lengths in meters
1	404
2	416
3	428
4	444
5	458
6	472
7	482
8	488
9	495
10	505
11	514
12	528

Plotted in curve form these data appear in curve A, Fig. 219. Here the *wave-lengths* (in meters) are the abscissas of the points on the curve and the *helix turns* the ordinates of the points on the curve. The wave lengths corresponding to fractions of a turn on the helix can be determined by following the abscissae to the base line or the horizontal axis.

We can plot the *calibrations of the open circuit* of a transmitting system in a similar way, but in this case a spark gap must be connected in series with the antenna system and in turn connected to the secondary winding of an induction coil. Generally the oscillations flowing in the antenna circuit are not powerful enough with this connection to operate the wattmeter (in series with the wavemeter), or the spark discharge of the coil may be too irregular to permit a reading of the wattmeter to be observed. It is therefore preferable to shunt the wavemeter by a crystalline detector and head telephone, the point of resonance being located by the maximum sound in the receiver.

Turns are added in the antenna circuit one at a time and corresponding wave length readings observed on the wavemeter. A typical set of readings follows:

Turns	Corresponding wave-lengths in meters
1	290
2	410
3	525
4	600
5	683
6	770

These data appear in the curve, B, Fig. 219. Intermediate wave lengths lying between the complete turns may be found as in the previous case.

Curves of the latter type should be prepared at each commercial station and posted in the apparatus room for quick reference. In this manner, the open and closed oscillatory circuits may be tuned to the standard waves with the assurance that the circuits are in exact resonance.

Returning to the resonance curve of Fig. 218: Assume that the portion of the curve, Fig. 218, above the horizontal line marked .05 represents the range of wave lengths over which the signals are audible at a receiving station located, say, 75 miles distant from the transmitter.

It is easily seen that a change of 20 meters on either side of the maximum ordinate will reduce the incoming signals to zero. It is also plain that the sharper the curve, the greater will be the reduction of the strength of the incoming signal for a given amount of detuning at the receiver. Hence resonance curves, in a sense, enable us to determine the ratio of the current at the receiver for a given wave length *off resonance* to that obtained at the maximum ordinate or resonance.

169. Measurement of the Logarithmic Decrement of Damping.—The determination of the decrement of damping of the antenna oscillations is a measure of the *tuning qualities* of a radio-transmitter and, in a sense, permits a predetermination of the interference to be expected therefrom. If the decrement of the oscillations flowing in the open circuit is known, we may determine the number of oscillations per spark discharge as follows:

$$M = \frac{4.605 + \delta}{\delta} \qquad (1)$$

where δ = Naperian logarithm of the ratio of two successive oscillations in the same direction;

M = number of complete oscillations* in the train when the last one has attained amplitude of .01 of the initial oscillation.

Hence if the emitted wave has a decrement of 0.2 there will be approximately 24 complete oscillations per spark.

It has been determined by experiment that a transmitter having decrement in excess of .2 per complete oscillation causes excessive interference to the operation of other stations not tuned to the same wave length, and it necessarily follows that the greater the decrement of the radiated wave the greater will be the interference, e. g., the wave will lack *tuning qualities*. Hence, as far as tuning and the elimination of interference is concerned, it is desirable to keep the decrement at a minimum value.

Modern quenched spark transmitters have oscillation decrements lying between .05 and .12 and therefore set up a minimum of interference, to the operation of other stations.

It has been shown by V. Bjerknes that the combined decrement of two circuits of radio-frequency, magnetically coupled, is given by the following formula:

$$\delta_1 + \delta_2 = 2\pi \left(1 - \frac{\lambda_1}{\lambda_r} \right) \sqrt{\frac{1^2}{1_r^2 - 1^2}} \qquad (2)$$

Where (in the case where a wavemeter is coupled to the antenna system of a wireless telegraph transmitter),

*Some writers express the logarithmic decrement on the basis that the amplitude of the last oscillation is one-tenth of the initial oscillation.

δ_1 = decrement of the circuit under measurement,
δ_2 = decrement of the decremeter or wavemeter,
λr = wave length at resonance,
λ_1 = wave length not more than 3 per cent. to 5 per cent. off resonance,
1^2 = current indicated by a measuring instrument connected in series with the wavemeter when the wavemeter is adjusted to λ_1.
I_r^2 = current indicated as above when the wavemeter is adjusted to resonance.

For accuracy δ_2 must be small as compared with δ_1.

In terms of the condenser capacity of the wavemeter, the foregoing formula can be written as follows.

$$\delta_1 + \delta_2 = \pi \frac{C_r - C_1}{C_r} \sqrt{\frac{1^2}{I_r^2 - 1^2}} \qquad (3)$$

Where C_r = capacity of the wavemeter condenser at resonance;
C_1 = capacity of the wavemeter condenser of a certain point off resonance.

It has been found for all practical purposes, that if the value of 1^2 is selected to be one-half the value of I_r^2, the formula is sufficiently accurate; hence, the integers underneath

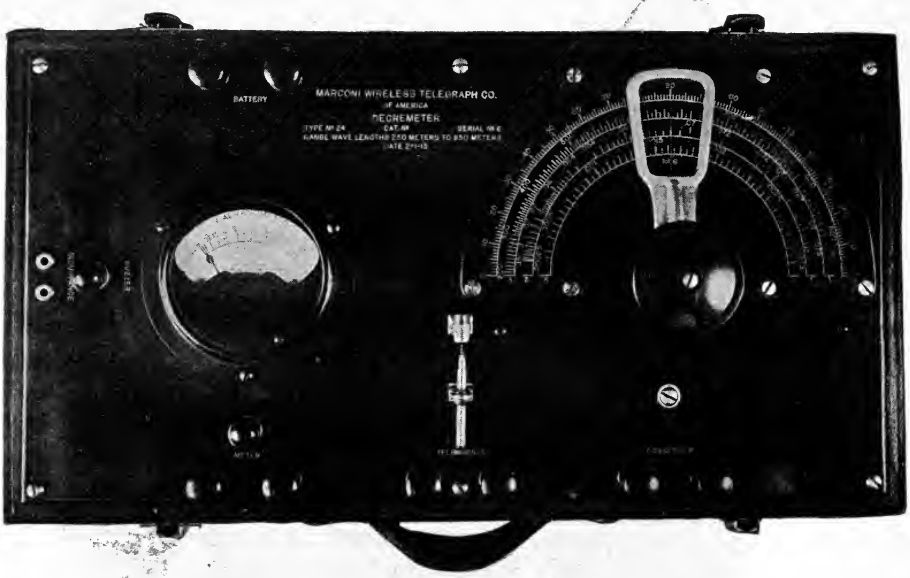

Fig. 220—The American Marconi Company's Decremeter.

the radical may be cancelled and the combined and total decrement of the two circuits obtain from the following simple formula:

$$\delta_1 + \delta_2 = \frac{C_r - C_1}{C_r} \pi \qquad (4)$$

Now, it is found by experiment that the resonance curve of a radio-transmitter is not always symmetrical and, therefore, different values for the decrement will be found accordingly as the measurement is made on either side of the maximum ordinate. Consequently the results will be more accurate if the capacity of the condenser is taken above and below resonance at points where the corresponding flow of current as measured by the wattmeter is one-half the value obtained at resonance; then the mean value of the decrement will be determined as follows:

$$\delta_1 + \delta_2 = \frac{C_2 - C_1}{C_r} \frac{\pi}{2} \qquad (5)$$

where C_2 = the capacity of the condenser at a value greater than C_r, the capacity where the reading of the wattmeter falls to one-half that obtained at Cr and,

C_1 = the capacity of the condenser at a similar wattmeter reading corresponding to a capacity less than C_r

Although the logarithmic decrement of a transmitter may be measured by several methods, but one considered the most practical by U. S. engineers will be described.

To carry out this measurement, *a wavemeter fitted with a current indicating instrument is required,* which may be either a hot wire milliammeter or a hot wire wattmeter. The condenser of the wavemeter should have a chart showing the capacity in microfarads corresponding to each position of the pointer on the condenser scale and the hot wire wattmeter should have a range of .01 to .1 watts.

To measure the decrement, the wattmeter should be connected as in Fig. 217 for obtaining the data for plotting a resonance curve.

The coil, L, of the wavemeter is then placed in inductive relation to the antenna system

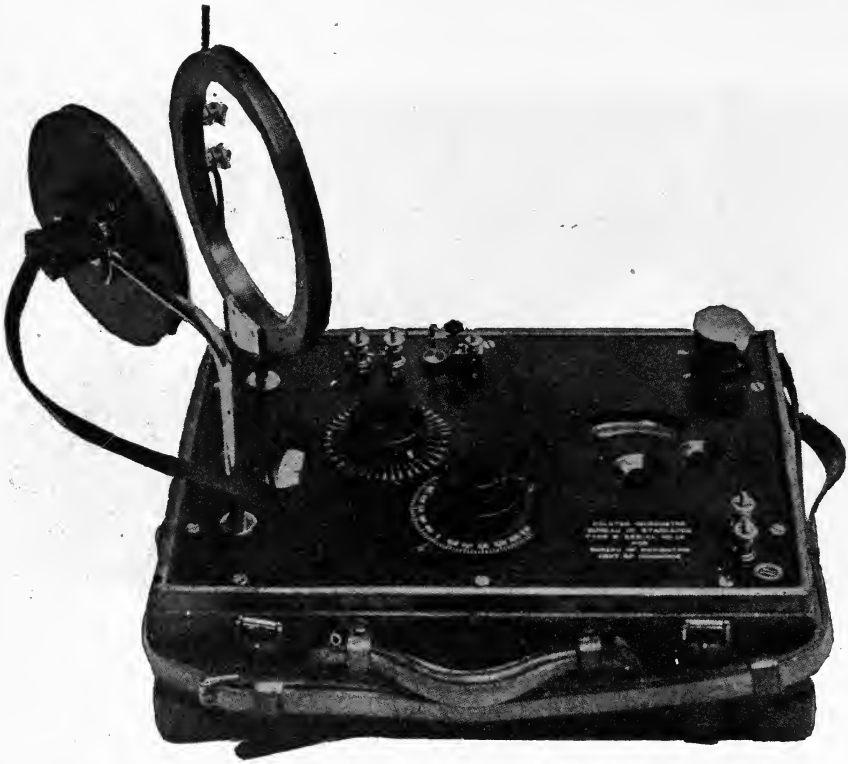

Fig. 221—Kolster Decremeter—the Type Used by the Government Radio Inspectors.

at the single turn of wire, L-1. The key of the transmitting apparatus is held down continuously and the length of the spark gap adjusted until the note is clear and uniform. This is followed by variation of capacity of the wavemeter condenser until the wattmeter indicates a maximum deflection which, of course, is obtained at the point of resonance between the two circuits. The inductance coil L is then moved about—that is to say—the coupling between it and the antenna coil L-1 is changed until the maximum reading of the wattmeter falls (as a matter of convenience) on some even number, say 0.08 watt. The condenser is then set at a lower value of capacity, C_1, where the reading of the wattmeter is 0.04 watt. A value of capacity above C_r is then observed (C_2) where the

reading of the wattmeter again falls to 0.04 watt. Substituting these values of capacity in formula No. 5 the combined decrement of the two circuits is obtained by a simple calculation.

Now, if the decrement of the wavemeter is subtracted from the total value obtained by the last equation, the result will be the decrement of the radiated wave. The decrement of the wavemeter can be obtained by direct calculation or by actual measurement.

170. Calculation of the Decrement of the Wavemeter (or Decremeter).—One method by which the damping of the wavemeter may be determined is carried out as follows:

After the value of $\delta_1 + \delta_2$ is obtained, the coupling between the wavemeter coil and the antenna system must not be altered. A piece of resistance wire, R (Fig. 217), is stretched tightly between two binding posts and connected in series with the circuit of the wavemeter. The amount of wire in use is gauged by the sliding contact, T-1. (A piece of No. 28 German silver wire or Therlo wire about 15 inches in length will be found satisfactory.)

With the pointer of the condenser set at Cr, or resonance, the spark gap is energized and resistance added at R until the reading of the wattmeter falls to exactly one-half that obtained in the original resonance adjustment, or 0.04 watt. The condenser of the wavemeter is then shifted to either side of resonance to such a value of capacity that will give

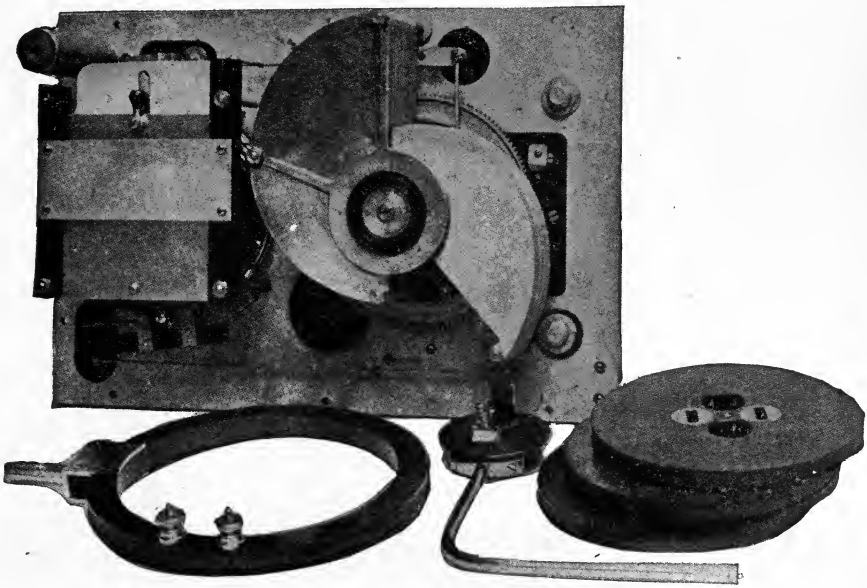

Fig. 222—Rear View of Kolster Decremeter.

one-half the wattmeter reading obtained at Cr, viz., 0.02 watt. Let the capacity of the wavemeter condenser below resonance be represented by C_3 and the capacity above resonance by C_4. Then the following formula is applicable:

$$\delta_1 + \delta_2 + \delta_3 = \frac{C_4 - C_3}{C_r} \times 1.57 \qquad (6)$$

Now, δ_3 is the decrement due to the addition of the resistance R, and it is evident that if the value of $\delta_1 + \delta_2$ is subtracted from $\delta_1 + \delta_2 + \delta_3$, the value of δ_3 is at once obtained.

It has been shown by Fleming and others that if the value of δ_2 is thus found out, we may evaluate the decrement of the wavemeter δ_2 by the following formula:

Letting V stand for the value obtained in equation No. 5 and V_1 for the value in No. 6, then,

$$\delta_2 = \frac{V^1 \times \delta_3}{2V - V_1} \qquad (7)$$

Hence, by subtracting the value of δ_2 from $\delta_1 + \delta_2$ we have δ_1, the decrement of the aerial circuit under test.

Assume for example,

$$\delta_1 + \delta_2 = 0.15$$

and $\delta_1 + \delta_2 + \delta_3 = 0.17$

then $\delta_3 = 0.02$

$$\text{and } \delta_2 = \frac{0.17 \times 0.02}{0.30 - 0.17} = 0.026$$

$$\text{therefore } \delta_1 = 0.15 - 0.026 = 0.124$$

If a milliammeter is connected directly in series with the wavemeter or decremeter, in place of the wattmeter, the reading of the meter at the point off resonance should be $\frac{1}{1.41}$ of that obtained at resonance or approximately 71 per cent.

A resonance curve of the antenna oscillations, having been taken for any reason whatever, may be used for calculation of the decrement, for it is apparent that the data required for formula No. 5 is included in such curves.

If the variable condenser of the wavemeter is constructed so that the capacity varies directly with the scale reading, the actual capacity of the condenser need not be known. The reading of the condenser scale for the points on and off resonance can be substituted in formula No. 5 in place of the condenser capacity and the decrement measurement carried on as usual.

Formula No. 2 can be written:

$$\delta_1 + \delta_2 = \frac{\lambda_2 - \lambda_1}{\lambda_r} 3.1416 \sqrt{\frac{I^2}{I^2_r - I^2}} \qquad (8)$$

where λ_r = wave length at resonance;
I_r^2 = current corresponding thereto in the circuit of the wavemeter;
λ_2 = wave length 3 per cent. to 5 per cent. above resonance;
λ_1 = wave length 3 per cent. to 5 per cent. below resonance;
I^2 = current corresponding to wave lengths above and below resonance.

The decrement of the wavemeter must, of course, be subtracted to obtain the value of δ_1.

Direct reading decremeters, such as the Kolster* decremeter (U. S. Bureau of Standards) are in use. In this instrument, a dial geared to the movable plates of the variable condenser is fitted with a scale of decrements and when the reading of the wattmeter at a given point off resonance is one-half of that obtained at resonance, the combined decrement of the decremeter and the circuit under measurement is obtained by first setting the decrement scale at zero (when one-half resonance current is obtained) after which the decrement dial is clamped to the movable plates of the variable condenser and the latter turned to resonance and to a point beyond where the reading of the wattmeter again falls to one-

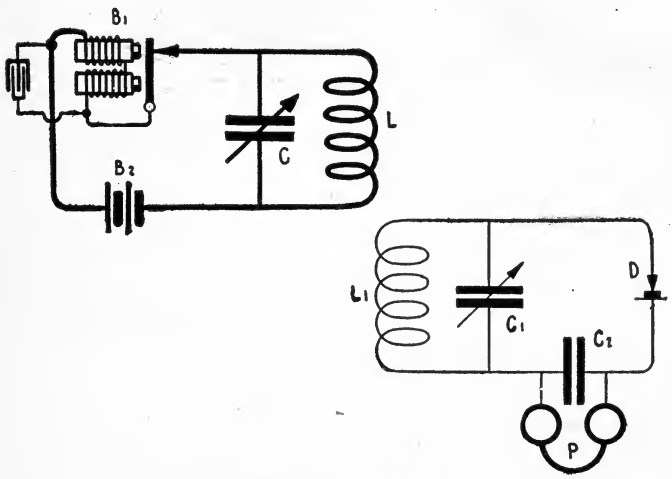

Fig. 223—Wavemeter as a Source of Radio Frequency Oscillations.

*Bureau of Standards publication No. 235 describes the Kolster Decremeter in detail.

half that at resonance. The decrement dial will then indicate the combined decrement of the circuit under measurement and that of the decremeter.

A photograph of the Marconi decremeter appears in Fig. 220 and the Kolster decremeter in Figs. 221 and 222. The latter is used by all U. S. Government radio inspectors.

171. Wavemeter as a Source of High Frequency Oscillations.—A wavemeter excited by an ordinary vibrating buzzer may be used to generate feeble oscillations of radio-frequency for measuring purposes.

The complete diagram for the apparatus is shown in Fig. 223. The circuit from the battery to the buzzer B-1 is completed through the coil of the wavemeter L. To eliminate sparking at the vibrator, the windings (of the buzzer) are shunted by a non-inductive resistance of 100 ohms or by a condenser of 1 mfd. capacity.

When the buzzer is put in action, a change in the lines of force threading through L takes place and the condenser C receives a charge, which afterward discharges through L at a frequency corresponding to $\frac{1}{\sqrt{L\,C}}$. Since the capacity of C is variable, oscillations of various frequencies may be generated and caused to act inductively on another circuit of radio-frequency for whatever purpose required.

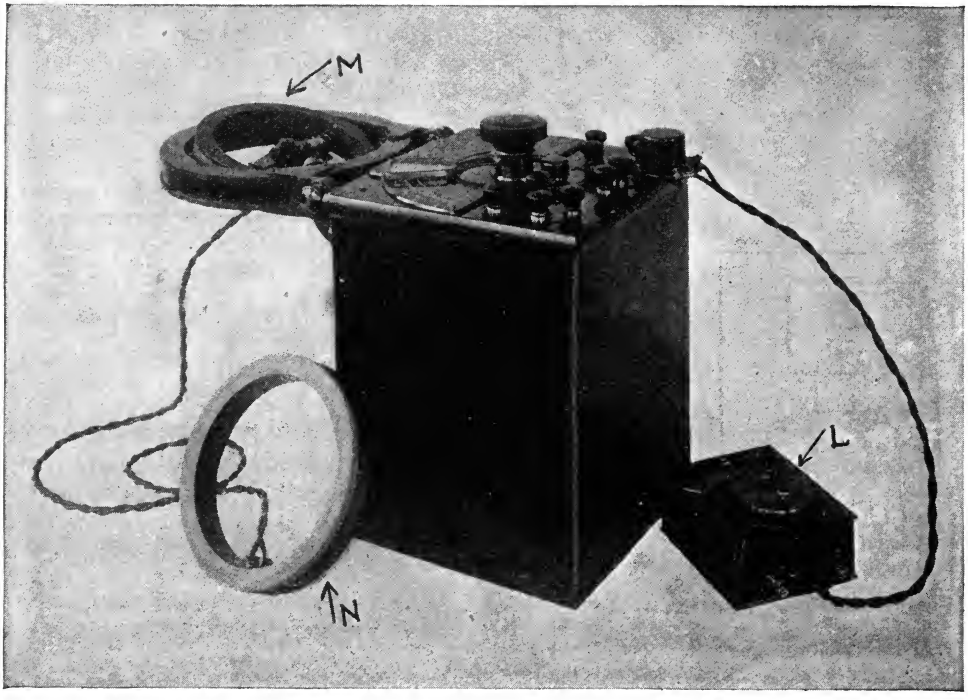

Fig. 224—Station Type Wavemeter of the American Marconi Company, Showing Exploring Coil, Thermo-Couple and Galvanometer.

172. Calibration of the Secondary and Primary Circuits of a Receiving Tuner.—The secondary circuit of a receiving tuner can be calibrated in terms of wave length by the method shown in Fig. 223, wherein the secondary winding of a tuner is indicated at L-1, the shunt variable condenser at C-1, the detector at D, and the telephone at P.

A certain value of inductance and capacity are selected at L-1 and C-1 respectively, followed by setting the buzzer into vibration. With the wavemeter in inductive relation, the capacity of the wavemeter condenser is varied until a maximum of sound is heard at telephone P. The wave length of the secondary circuit is then identical with the setting of the wavemeter.

Other values of inductance may be selected at L-1, the capacity of C-1 varied progressively from zero to maximum, and the corresponding wave length measured by the wavemeter. These calibrations may be plotted in curve form on cross-section paper or in the form of a table for ready reference.

The open circuit of a receiving station can be calibrated by the method shown in Fig. 213. With the buzzer in operation, inductance is progressively added at the aerial tuning inductance L-2 or the primary winding L-1 of the receiving transformer, and the wave length reading observed at the wavemeter. The reduction of wave length occasioned by the short wave condenser may be measured on the wavemeter in the same manner.

If, during the preliminary adjustment, resonant response cannot be secured by this method, it indicates that the wavemeter has not the proper range for the tuner. Hence, some knowledge of the probable wave length of the circuit should be obtained before undertaking the test and a fitting wavemeter supplied. The wave length can be roughly estimated from the approximate values of inductance and capacity in the circuit.

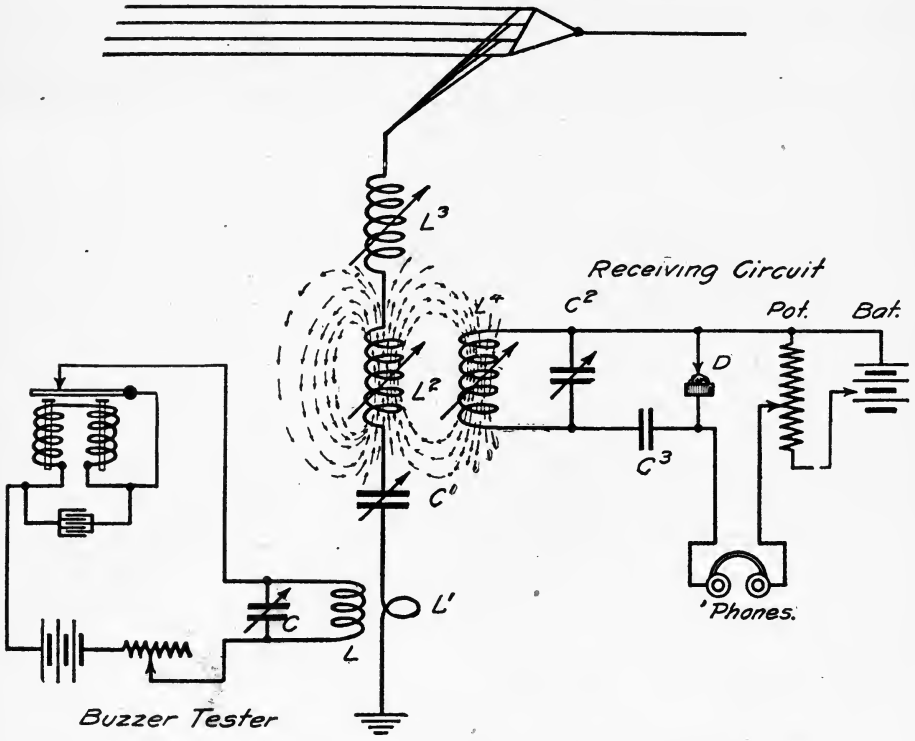

Fig. 225—Showing How Open and Closed Oscillation Circuits of a Receiving Tuner May Be Calibrated.

173. Calibration of the Open and Closed Circuits Simultaneously.—The most satisfactory method of calibrating a receiving tuner or adjusting the receiving system to a standard wave length with a given aerial, is to place a wavemeter in inductive relation to the antenna at all times as in Fig. 225.

Since a change of coupling changes the tuning of the open and closed circuits, the exact adjustment of the circuits for the loudest response with any degree of coupling can be determined by setting the wavemeter into excitation and causing it to act inductively upon the open circuit. This should be followed by variation of the inductance and capacity in both the open and closed circuits until a sharp maximum is obtained in the head telephones of the receiver. The loudest response, of course, is secured when the wavemeter, the closed, and the open circuit are all in electrical resonance. At the same time, the crystal rectifier can be adjusted to maximum sensitiveness.

Care should be taken, during this calibration, to vary the values of inductance and capacity

of the closed and open circuits in a progressive manner, e. g., an increase of inductance in the antenna circuit calls for a corresponding increase in the closed or detector circuit, or vice versa.

Using solid rectifying detectors, the inductance of the wavemeter can only be placed an inch or so from the earth lead, but with a sensitive vacuum valve amplifier, the wavemeter may be placed several feet from that lead.

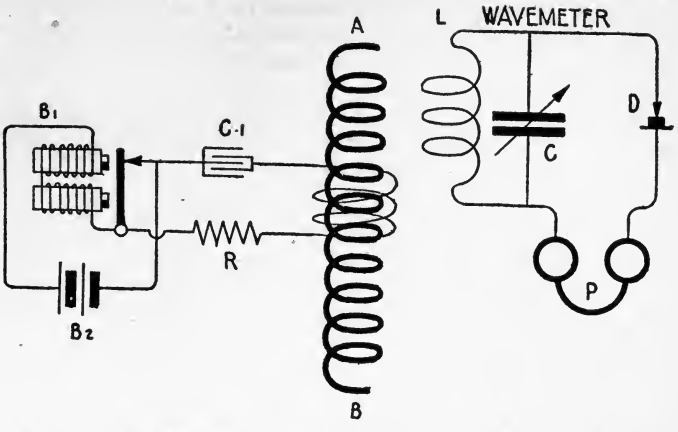

Fig. 226—The Measurement of the Natural Wave Length of a Simple Tuning Coil.

174. Measurement of the Natural Oscillating Period of a Coil.—The natural wave length of a tuning coil, as a simple open circuit oscillator, may be measured by the circuit and apparatus shown in Fig. 226.

The radio-frequency coil A, B, is set into excitation by an aperiodic buzzer circuit which includes the 1 mfd. condenser C-1 and the resistance R of 2,000 ohms. The wavemeter, fitted with a sensitive detector D, is placed in inductive relation to the coil in the usual manner. If the coil possesses a fair value of distributed capacity, the resonant point on the wavemeter will be sharply defined, but, lacking this, the point of resonance may be somewhat difficult to locate.

175. Measurement of Electrostatic Capacity.—(a) *Capacity at low voltage and audio-frequencies.* We may measure the simple electrostatic capacity of a condenser or an aerial by the bridge method of Fig. 227. The condenser of unknown capacity is shown at C-x, and a standard variable condenser calibrated in microfarads at C-n. R-1 and R-2 are non-inductive resistances of low value such as found in the usual sliding wire bridge, P

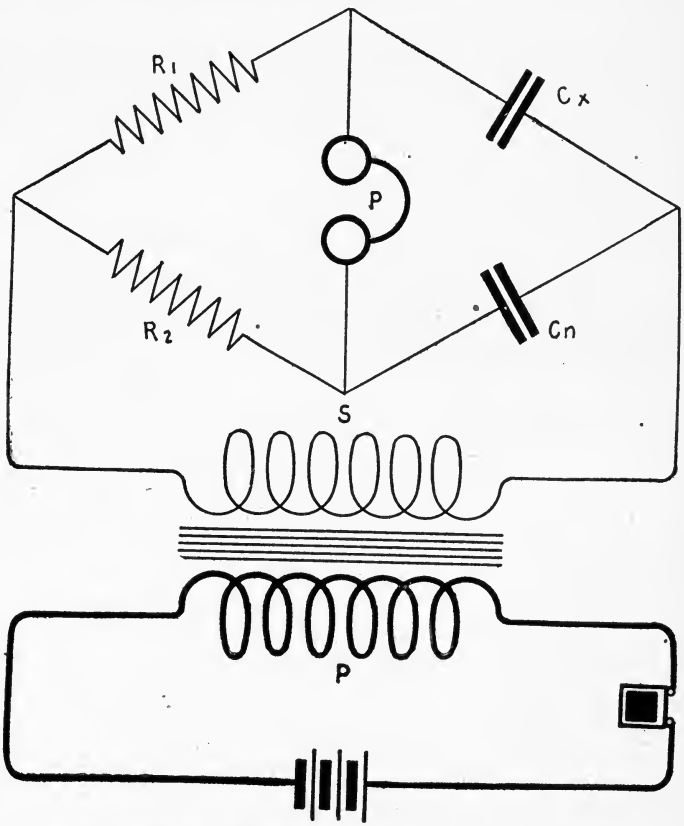

Fig. 227—Diagram for the Measurement of Electrostatic Capacity.

and S are the primary and secondary windings respectively of an ordinary telephone induction coil. A buzzer and battery are connected in series with P. This apparatus affords a source of electromotive force for obtaining balance of the bridge.

To carry out the measurement, the buzzer is set into vibration and the values of R-1 and R-2 varied until complete silence or a minimum of sound is heard in the telephone P-1. The various quantities are then related as folows:

$$\frac{C\text{-}x}{C\text{-}n} = \frac{R\text{-}2}{R\text{-}1} \text{ or } C\text{-}x = \frac{R\text{-}2}{R\text{-}1} \times C\text{-}n$$

If condensers C-x and C-n have different dielectrics, complete silence cannot be obtained, hence a minimum of sound is an indication of balance. To carry out the measurement for low values of capacity, the total resistance of the sliding wire bridge, need not exceed 110 ohms.

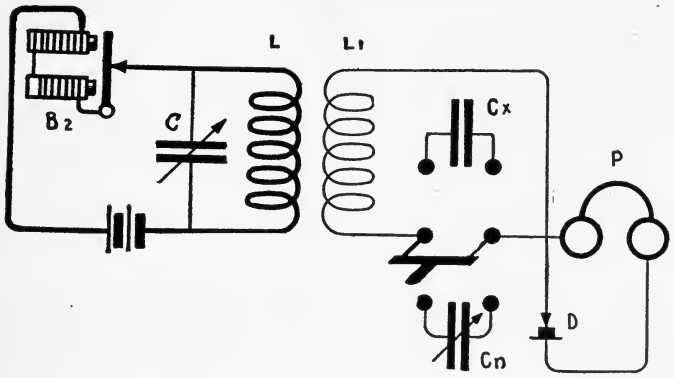

Fig. 228—Measurement of Electrostatic Capacity at Radio Frequencies.

If the aerial and earth wire of an antenna system be substituted for the condenser C-x, its electrostatic capacity may thus be determined, but it should be borne in mind that the simple *electrostatic capacity* of an aerial and its *"effective"* capacity when traversed by alternating current of radio-frequency are of different value. This is due to the non-uniform distribution of current and voltage throughout the open circuit which causes the capacity to vary with the applied frequency. Generally the effective capacity is less than the simple electrostatic capacity. (The latter value is the capacity obtained by considering the aerial merely as one plate of a condenser, the earth the opposite plate and with uniform current and voltage distribution.)

A *standard of capacity* for the bridge may be constructed from flat brass plates of rectangular form and its capacity may be calculated by the following formula:

$$C = \frac{A}{4\pi\ T\ 900{,}000} \text{ mfds.}$$

where **A** = area in sq. cms. of the dielectric covered by the plates,
T = separation of the plates in cms.

(b) *Measurement of Capacity at Radio-Frequencies.* The capacity of the condensers used in receiving circuits may be determined by the method shown in diagram of Fig. 228. A wavemeter L, C (or any variable condenser and inductance within the required range) is set into excitation by the buzzer B-2. The resulting oscillations are caused to act upon the second circuit of variable frequency, L-1, C-x or L-1, C-n. C-n is a standard variable condenser calibrated in microfarads, and C-x the condenser, the capacity of which is to be determined. A crystal rectifier connected uni-laterally at D is shunted by the telephone P. A double pole double throw switch permits either condenser to be connected into the circuit.

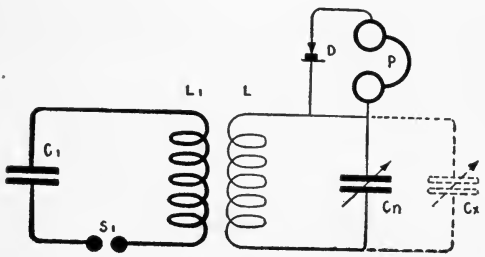

Fig. 229—Measurement of Capacity by Means of a Wavemeter.

With the buzzer in vibration, inductance L-1 is varied until resonant response is obtained in the telephone or when L, C = L-1, C-x. The D. P. D. T. switch is then thrown to C-n, and its capacity altered until circuit L-1, C-n, is again in resonance with L, C. Obviously, the capacity of C-x is that of C-n, which is already known.

For accuracy, the coupling between L and L-1 should be reduced to a degree consistent with the strength of signals. To bring the two circuits in resonance, it may be necessary with certain condensers to vary the capacity of C.

Another method for quickly determining the capacity of a condenser is shown in Fig. 229. A standard wavemeter, L, C-n, has the condenser of known capacity C-n and the crystal rectifier D connected unilaterally. The wavemeter is tuned to resonance with any spark transmitter such as L-1, C-1, S-1, and the capacity of C-n noted. With the spark still discharging at S-1, C-x is connected in shunt to C-n and the capacity of C-n reduced until resonance is obtained again. For example, if the capacity of C-n in the first measurement is .007 mfds., and in the second test, .002 mfds., the capacity of C-x must be the difference of the two readings, or .005 mfds. Circuit L-1, C-1, S-1 may be replaced by a wavemeter and buzzer.

176. Measurement of the Effective Inductance of a Coil at Radio Frequencies.—The effective inductance of a given coil can be determined by the connections and arrangement of apparatus in Fig. 228. Assume that the inductance of L-1 is required and condenser C-n is connected in shunt; then L, C, and L-1, C-n, are tuned to resonance with very loose coupling. Then if L.C, is a standard wavemeter, the wave length of L-1, C-n is at once obtained. Then,

$$\text{L-1} = \frac{\lambda^2}{3{,}552 \times \text{C-n}}$$

where L = the inductance of the coil in centimeters.

177. Calculation of Inductance from the Constants of the Coil.*—The Nagaoka formula for calculating the inductance of a single layered coil is expressed as follows:

$$L = 4\pi^2 \frac{a^2 n^2}{b} K,$$

where **L** = inductance in centimeters,
a = mean radius of coil in centimeters,
n = total number of turns,
b = length of coil in centimeters,
K = a constant varying as the ratio $\frac{2a}{b}$.

Values of K for $\frac{2a}{b}$ appears in the curves of Fig. 230.

If the dimensions of the coil are given in inches, the student can convert them to centimeters by multiplying by 2.54 (1 inch = 2.54 centimeters). Also the radius is one-half the diameter, hence the ratio of $\frac{2a}{b}$ is readily obtained, and the corresponding value of K from the curve. Thus if $\frac{2a}{b} = 1.35$, then K = 0.84.

(*a*) *Example* 1.—Assume a coil of 10 turns with mean diameter of 18 inches, and overall length including the insulation (if any) of 12.5 inches. The inductance is calculated as follows:

n = 10 turns;
b = 31.75 centimeters;
a = 22.9 centimeters;

$$\frac{2a}{b} = \frac{18}{12.5} = 1.44 \text{ and from Fig. 230 } K = 0.826.$$

$$\text{Therefore } L = 4\pi^2 \frac{(22.9)^2 \times (10)^2}{31.75} \times 0.826 \text{ or } 53{,}825 \text{ centimeters.}$$

*Presented by Wm. H. Priess in the August, 1915, issue of the Wireless Age.

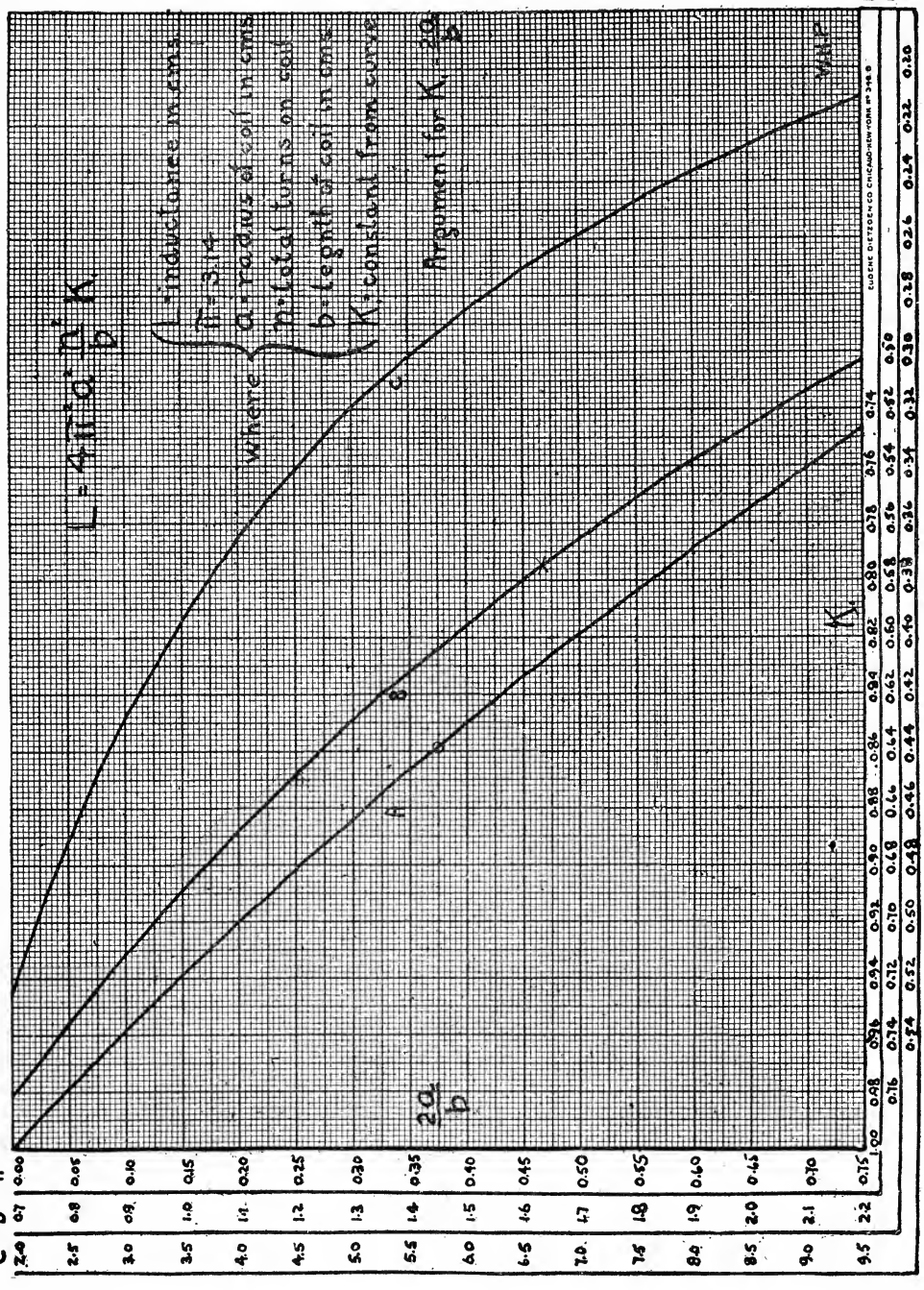
L = 4π² a² n² K
where
L = inductance in cms
π = 3.14
a = radius of coil in cms
n = total turns on coil
b = length of coil in cms
K = constant from curve
Argument for K = 2a/b
2a/b
K
A
B
C
W.H.P.
EUGENE DIETZGEN CO. CHICAGO-NEW YORK

(*b*) *Example* 2.—Calculate the inductance of a coil three inches in diameter, 8 inches in length, wound closely with No. 26 double silk-covered wire. From the table on page 213 the diameter of No. 26 D. S. C. wire is .02014 inches, hence,

$$n = \frac{8}{0.02014} = 397 \text{ turns};$$

$b = 20.3$ centimeters;

$a = 3.81$ centimeters.

$\frac{2a}{b} = \frac{3}{8} = 0.375$, and from Fig. 196

$K = 0.859$

$$\text{Therefore } L = 4\pi^2 \frac{(3.81)^2 \times (397)^2}{20.3} \times 0.859, \text{ or } 3{,}820{,}000 \text{ centimeters.}$$

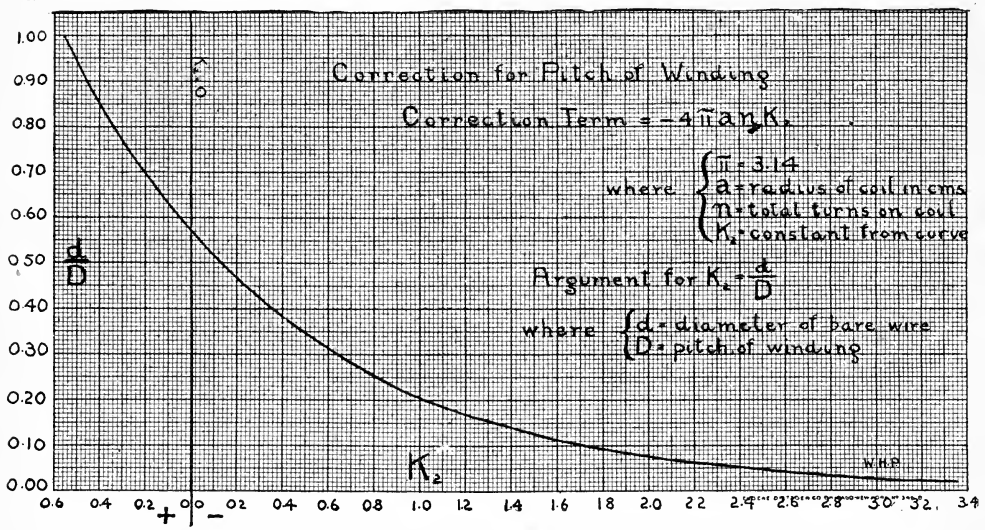

Fig. 231—Curves Showing the Value of a Constant for the Ratio of the Diameter of a Wire to Its Pitch.

In the curves of Fig. 230, values of K are given for coils lying between those of infinite length and those where the diameter is 9½ times the length. This covers all conditions encountered in practice.

(*c*) *Correction factor.*—For practical calculation the foregoing formula is sufficiently accurate, but for greater precision a correction factor must be applied. In fact, the inductance values obtained in examples 1 and 2 are termed the "current sheet" inductance, based upon the assumption of a coil wound with infinitely thin tape, the turns of which are assumed to touch but not to be in electrical contact.

Dr. Rosa of the Bureau of Standards has given an expression for circular sectioned non-magnetic wire as follows: If the true inductance is designated as L, and the current sheet inductance as L-s, then,

$$L = L\text{-}s - L\text{-}c$$

where L-c is the correction value, and,

$$L\text{-}c = 4\pi\, a\, n\, (K_2 + K_3)$$

where K_2 and K_3 are constants of the coil. (See B. of S., vol. 8, pp. 197 and 199).

Now K_2 is a constant plotted to the parameter of $\frac{d}{D}$ which is the ratio of the diameter

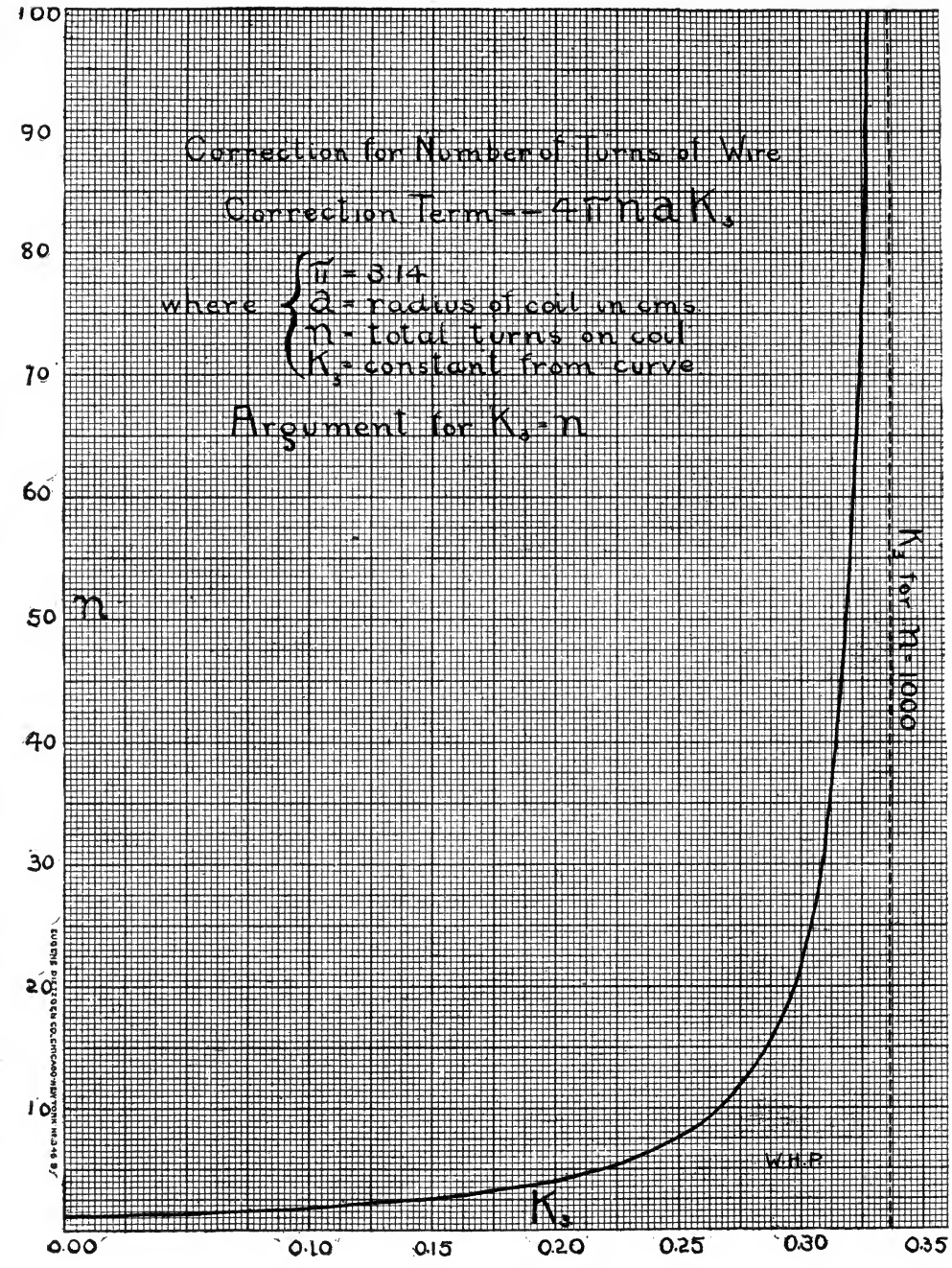

Fig. 232—Showing the Values of a Correction Factor for Determining the True Inductance of a Coil.

of bare wire to its pitch in a given winding and for any given value of $\frac{d}{D}$ a value of K_2 appears in Fig. 231. It should be noted that K_2 may be positive, negative or zero; that is, on the left of the zero line K_2 is positive and on the right hand side negative.

K_3 is another factor plotted against the number of turns in the coil as in Fig. 232 where it will be seen that K_3 is zero for one turn and 0.3365 for 1,000 turns.

(*d*) *Corrections for Example* 1.—We shall now calculate the value of L-c for example 1. Assuming the wire of the helix to have a diameter of ¼ inches with spacing of one inch, $\frac{d}{D} = \frac{.250}{1.000} = .025$ and from the curve, Fig. 231, $K_2 = -0.8$ (of negative value).

Since N = 10, then from the curve, Fig. 232, $K_3 = 0.266$, hence,

$$\text{L-c} = 4\pi \times 22.9 \times 10\ (-0.8 + 0.266),$$

$$\text{L-c} = 12.566 \times 22.9 \times 10\ (-0.534) \text{ cms.}$$

hence L-c = —1,540 cms.

and L = 53,825 — (—1,540) = 55,365 cms.

(*e*) *Correction for Example* 2.—The diameter of bare No. 26 B. and S. wire is .01790 inches and of D. S. C. No. 26, .02014 inches, hence,

$$\frac{d}{D} = \frac{.01790}{.02014} = 0.889$$

From K_2 curve, $K_2 = +0.441$ and since n = 397, therefore $K_3 = 0.335$ approx.

Therefore $\text{L-c} = 4\pi \times 3.81 \times 397\ (0.441 + 0.335)$ cms.

L-c = 14,750 cms.

L = 3,820,000 — 14,750 = 3,805,250 cms.

and $\frac{\text{L-c}}{\text{L}} = 0.38$ per cent. the correction factor.

The correction factor is thus quite appreciable for some coils and rather negligible for others. With currents of radio-frequency there is an altered current distribution in the conductor which affects the inductance, giving a lesser value than in circuits where the current is uniformly distributed throughout, but the finer the wire, the smaller will be the change of inductance due to increase of frequency.

A table of the diameter of various sized wires in the B. and S. gauge follows:

TABLE NO. 1.

Silk and Cotton-Covered Annealed Copper Wire.

Diameter in Mils.

B. & S. Gauge	Bare	Single Cotton	Double Cotton	Single Silk	Double Silk
20	31.961	37.861	42.161	34.261	36.161
21	28.462	34.362	38.662	30.762	32.662
22	25.347	31.247	35.547	27.647	29.547
23	22.571	28.471	32.771	24.871	26.771
24	20.100	26.000	30.300	22.401	24.300
25	17.900	23.800	28.100	20.200	22.100
26	15.940	21.840	26.140	18.240	20.140
27	14.195	20.095	24.395	16.495	18.395
28	12.641	18.541	22.841	14.941	16.841
29	11.257	17.157	21.457	13.557	15.457
30	10.025	15.925	20.225	12.325	14.225
31	8.928	14.828	19.128	11.228	13.128
32	7.950	13.850	18.150	10.250	12.150
33	7.080	12.980	17.280	9.380	11.280
34	6.304	12.204	16.504	8.504	10.504
35	5.614	11.514	15.841	7.914	9.814
36	5.000	10.900	15.200	7.300	9.200
37	4.453	10.353	14.653	6.753	8.653
38	3.965	9.865	14.165	6.265	8.165
39	3.531	9.431	13.731	5.831	7.731
40	3.144	9.044	13.344	5.344	7.344

This data is essential in the calculation of the inductance of the coils in radio-frequency circuits, particularly the tuning coils of the receiving apparatus. Knowing the length of the winding and the diameter of the wire, the total number of turns is obtained in dividing the former by the latter. Multiplying this by the circumference of the coil, the number of feet of wire required for a given winding is at once obtained.

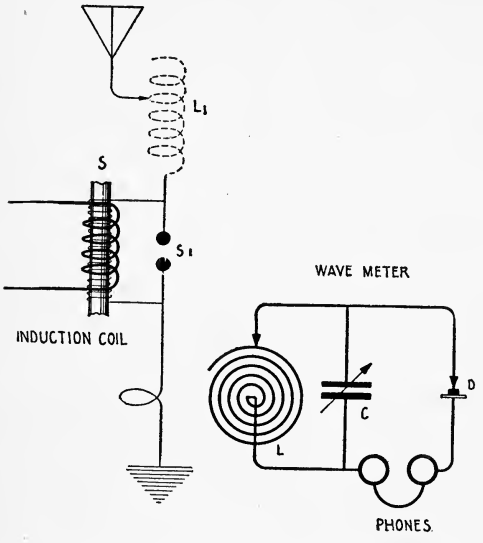

Fig. 233—Diagram of Connections for Measuring the Inductance and Capacity of an Aerial.

178. Measurement of the Effective Inductance and Capacity of an Aerial.—To measure the effective inductance of an aerial, a standard wavemeter and a standard of inductance is required. The latter can be made up of Litzendraht wire and calculated from the inductance formula in the foregoing paragraph.

The aerial is set into excitation by an induction coil or transformer S, Fig. 233, and the wavemeter placed in inductive relation. The reading of the natural wave length thus obtained may be designated as λ_1. We next insert the standard inductance L^1 and take a second reading of the wave length which may be designated by λ_2.

$$\text{then } L = \frac{\lambda_1^2 L^1}{(\lambda_2^2 - \lambda_1^2)}$$

where L = inductance of the aerial in microhenries;
L^1 = inductance of the standard in microhenries.

To determine the effective capacity of an aerial, first measure the natural wave length λ_1 then insert a condenser C^1 of .001 microfarads capacity and take a second measurement of wave length λ_2. Obviously λ_2 is less than λ_1. Then the capacity

$$C = \frac{\lambda_1^2 - \lambda_2^2}{\lambda_2^2} \times C^1,$$

where C = capacity of the aerial in microfarads.

179. Calibration of a Wavemeter from a Standard.—If a calibrated wavemeter can be procured, the wavemeter described at the beginning of this chapter can be calibrated from it in a simple manner, as shown in Fig. 234. Here, L and C respectively, are the inductance coil and condenser of a standard wavemeter which is set into excitation by the buzzer, H, and the batteries B. The winding of the magnets of the buzzer are shunted by a condenser K, of about 1 microfarad capacity, for which may be substituted, if desired, a non-inductive resistance of about 100 ohms. These are intended to absorb the counter electromotive force of the buzzer winding.

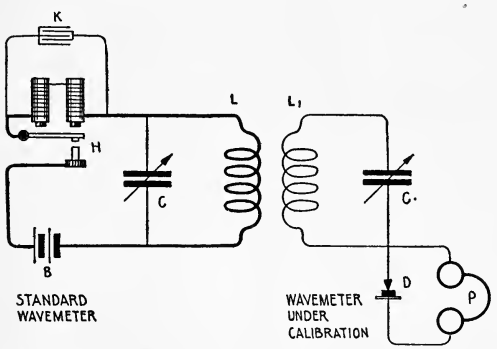

Fig. 234—Simple Method of Calibrating a Wavemeter from a Standard.

When the buzzer is set into operation, the wavemeter L C becomes a miniature transmitting set, radiating waves corresponding to a definite frequency of oscillation which will be recorded on the wavemeter L-1, C-1, when it is in resonance with L, C. The standard

wavemeter L, C is then set at various wave lengths and the buzzer put into operation, being carefully adjusted for clear tones. The capacity of the condenser C-1, is then altered until a maximum of sound is heard in the head telephones. Obviously, L-1, C-1 has the same wave length as L, C, and a record of the setting is made accordingly. Thus if six or eight readings are taken, covering the entire scale of C-1, the data can be plotted on cross-section paper in the form of a curve. Intermediate values of wave lengths are readily determined from the curve.

For accuracy during calibration, the degree of coupling between L and L-1 must be kept as low as is consistent with the strength of signals. If response is not secured readily at the wavemeter, L-1, C-1, it may be that the values of inductance and capacity are such that the circuit is out of resonance with the standard wavemeter L, C. If so, different values of inductance or capacity must be selected until a resonant response is secured. It is not necessary for the crystal rectifier, shown in Fig. 234, to be connected unilaterally to the wavemeter. It may be shunted around the circuit as in the usual receiving set.

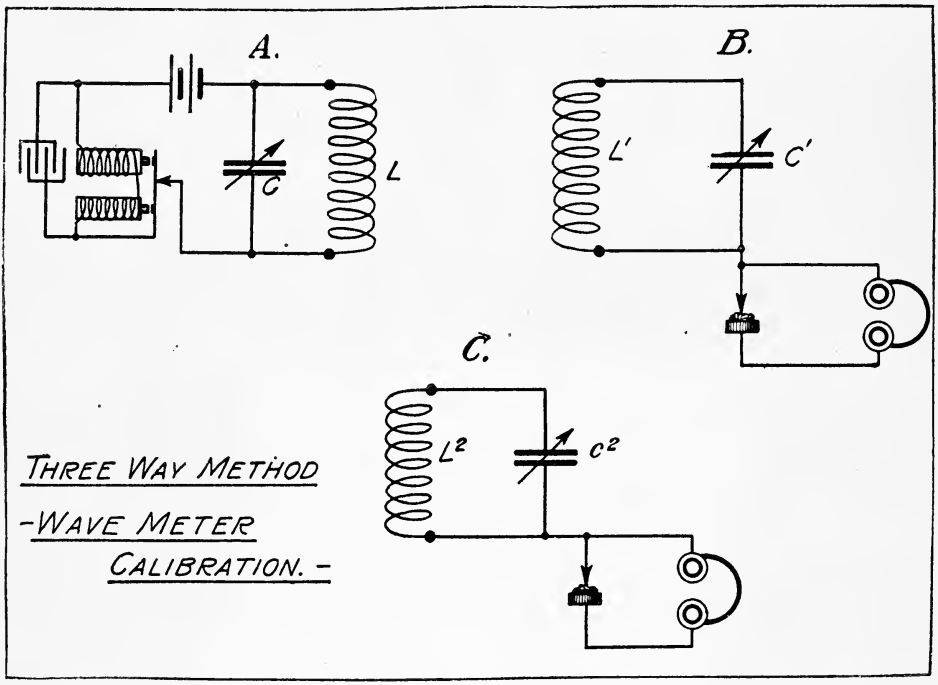

Fig. 235—Three Way Calibration of Wavemeter for Greater Accuracy.

To eliminate all possibility of error in calibration due to the added capacity effect of the shunt excitation circuit of the foregoing connection, a *three-way method* may be employed as shown in Fig. 235. Herein, B is an accurately calibrated standard wavemeter with a crystal detector and head telephones connected unilaterally. The wavemeter under calibration is represented at C and also has a detector connected unilaterally. At A are the circuits comprising the fixed inductance L, the condenser C, the buzzer, the battery, and the shunt condenser. By means of the calibration chart furnished with the wavemeter B, the condenser C-1 can be set at any wave length within the range of the meter.

The buzzer having been put into operation, the capacity of the variable condenser of the oscillation circuit, A, is changed until maximum response is secured at the head telephones of the wavemeter B. During this operation the coupling between the coils, L and L-1, should be as loose as is consistent with the strength of signals in the head telephones. The point of resonance having been determined, the coil L-2, of the wavemeter, C, is placed in inductive relation to L. The capacity of the condenser, C-2 is then altered until a resonant response is secured in the head telephones. Obviously, the wave length of the wavemeter C, is now identical with that of the wavemeter B.

This process is repeated until a complete set of calibrations are obtained. If desired, the crystalline detectors connected to the wavemeters, B and C, may be connected in series with the head telephone and then in shunt to the condenser. The connection shown, however, affords greater accuracy because the calibration of the wavemeter is not so seriously affected.

180. Measurement of Mutual Inductance at Radio Frequencies.—Assume that two coils such as the primary and secondary windings of a receiving tuner, L-2 and L-3, Fig. 236, are in inductive relation and the mutual inductance is required.

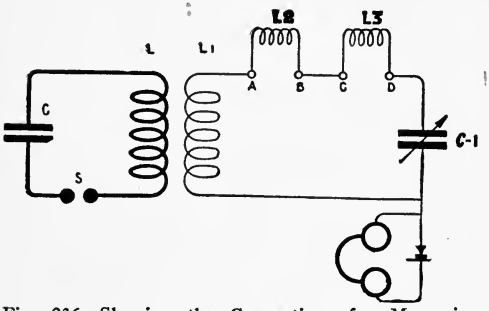

Fig. 236—Showing the Connections for Measuring the Mutual Inductance of Two Coils at Radio Frequencies.

With the binding posts A, B and C, D connected together by a jumper, the wavemeter is tuned to resonance with the spark gap circuit, L, C, S. The capacity of the wavemeter condenser C-1 is observed and may be designated as C-2. Inductances L-2 and L-3 are now connected in series and a new value of C-1 obtained for resonance, designated as C-3. Then when the magnetic fields of the two coils are in the same direction, a large value of inductance is obtained which is equal to L-2 + L-3 + 2M, and in terms of the two condenser capacities observed on the wavemeter,

$$\text{L-2} + \text{L-3} + 2\text{M} = \left(\frac{\text{C-2}}{\text{C-3}} - 1 \right) \text{L-1}$$

where L-1 = inductance of the wavemeter in microhenries.

After this value is obtained, the connections from L-3 to C, D are reversed (as shown by the dotted lines) and the measurement gone through again. Then if this is the smaller value of inductance,

$$\text{L-2} + \text{L-3} - 2\text{M} = \left(\frac{\text{C-2}}{\text{C-4}} - 1 \right) \text{L-1}$$

Where C-4 = capacity of the condenser at resonance with the connections to C, D reversed.

The two values of inductance having thus been obtained, the mutual inductance

$$\text{M} = \frac{\text{L-5} - \text{L-6}}{4}$$

Where M = the mutual inductance in microhenries;
L-5 = larger value of total inductance;
L-6 = smaller value of total inductance.

181. Comparative Measurement of the Strength of Incoming Signals.—The human ear is not to be relied upon to judge the strength of incoming signals at a given receiving station when they vary in intensity by values less than 25 per cent. and since the comparison of the signals from one or more transmitting stations is often desirable for purposes of record or adjustment, more accurate means must be provided.

The ideal way to measure the strength of the incoming signals would be to place a galvanometer in the receiver circuits, but this is not feasible, particularly when the receiving station is far distant from the transmitter or in case discharges of atmospheric electricity are rather severe. Hence the measurement is carried out by means of a calibrated shunt resistance connected across the receiving telephone.

The measurement of the signal intensity is carried out as follows: A given transmitter is tuned to maximum strength of signals at the receiver, followed by connecting a *variable resistance* across the telephones, the resistance being reduced until the signals just disappear or are barely audible.

If we designate the value of the telephone current in microamperes required to make the least audible signal as C-a, it has been shown that

$$C = \frac{R + T}{R} \times C\text{-}a$$

where C = current in the telephone without the shunt;
R = resistance of the shunt for the least audible signal;
T = resistance of the telephone.

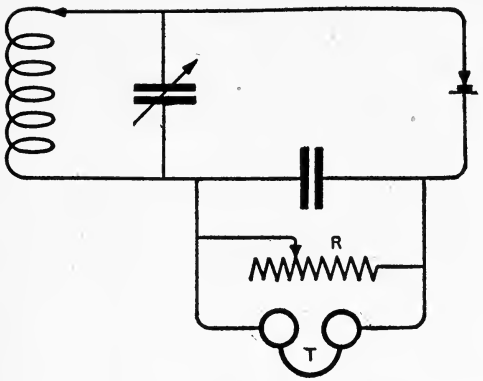

Fig. 237—Fundamental Circuit of the Audibility Meter.

Now the value of C-a for the least audible signal varies with the frequency of the current flowing through the telephone, the impedance of its windings, and the sensitiveness of the human ear to weak sounds. Hence at a given station the value of C-a is ignored and the strength of the signal spoken of as being so many times audibility.

Thus as in the diagram, Fig. 237, if the value of R for the least audible signal is 50 ohms, and the resistance of the telephone 2,000 ohms, then

$$C = \frac{2{,}000 + 50}{50} C\text{-}a = 41, C\text{-}a,$$ e. g., the signal is 41 times that required to make an audible sound in the telephone.

It is clear that the results obtained by this method vary at each station according to the type of apparatus and the keenness of the observer, hence the audibility factor cannot be used at two different receiving stations to compare the effectiveness of a given transmitter. It does, however, permit an approximation which is superior to mere guesswork.

Fig. 238—Audibility Meter (American Marconi Company).

Shunt resistance boxes are manufactured for this purpose and are termed *audibility meters.* The resistance coil is fitted with a multipoint switch and the contact studs are calibrated in terms of the audibility of the received signals as compared to the current corresponding to the least audible signal with the particular telephone supplied with the meter. The type manufactured by the Marconi Company of America is shown in Fig. 238.

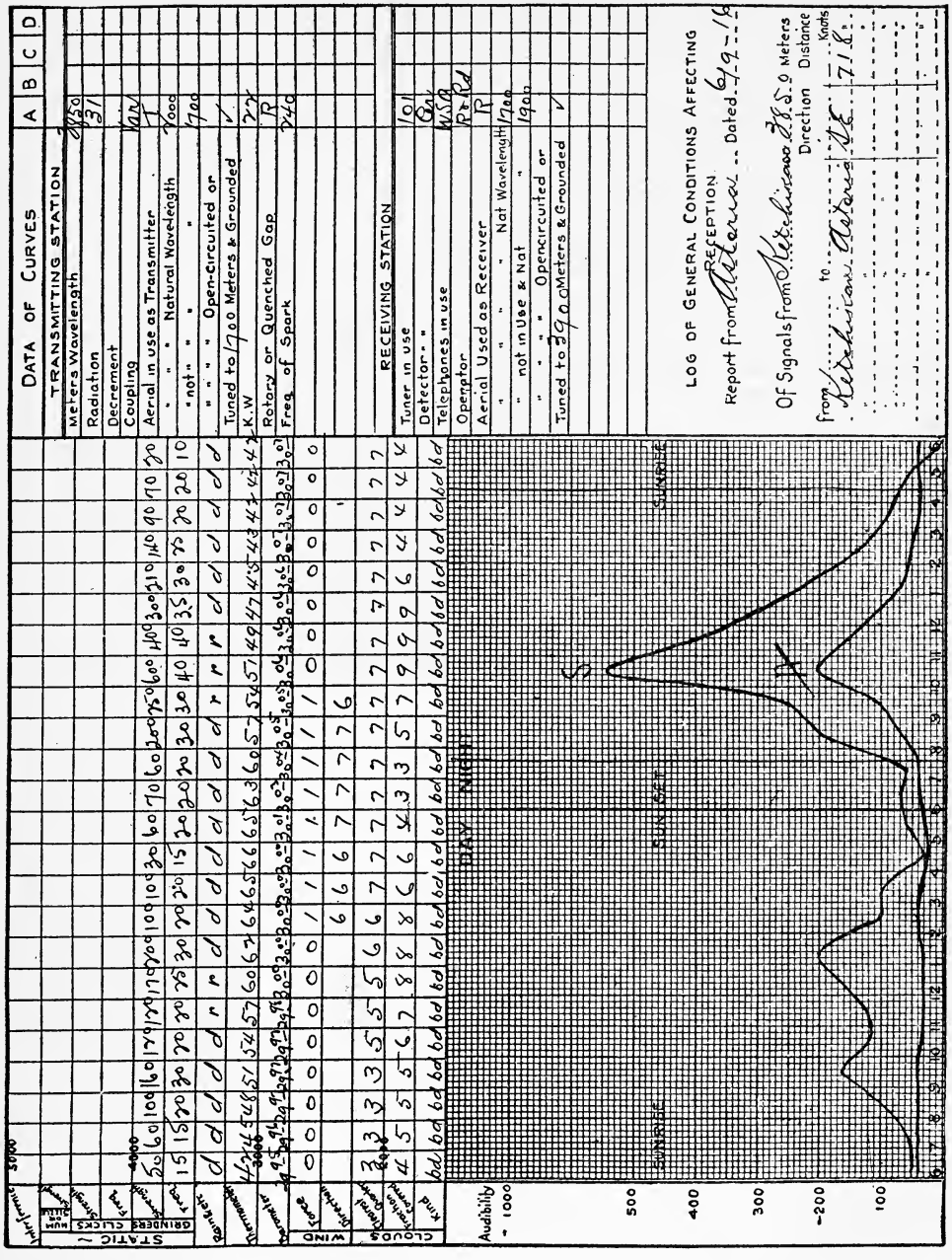

Fig. 239—Curves Showing the Variation of Signals Between Two Marconi Stations.

A typical chart* of the relative strength of signals received at different hours of the day from the Marconi station at Ketchikan, Alaska, at the receiving station at Astoria, Ore., is shown in Fig. 239. These readings were taken on a Marconi audibility meter.

*Curve A, Fig. 239, shows the signal audibility throughout the 24 hours of the day from Ketchikan to Astoria. Curve S shows the intensity of atmospheric electricity. It is interesting to note the distinct rise in both the "signal" and "static" intensity near to midnight and the distinct drop during the early hours of the morning. The rise of the peak is found to occur at approximately the same hour in observations taken over several months duration.

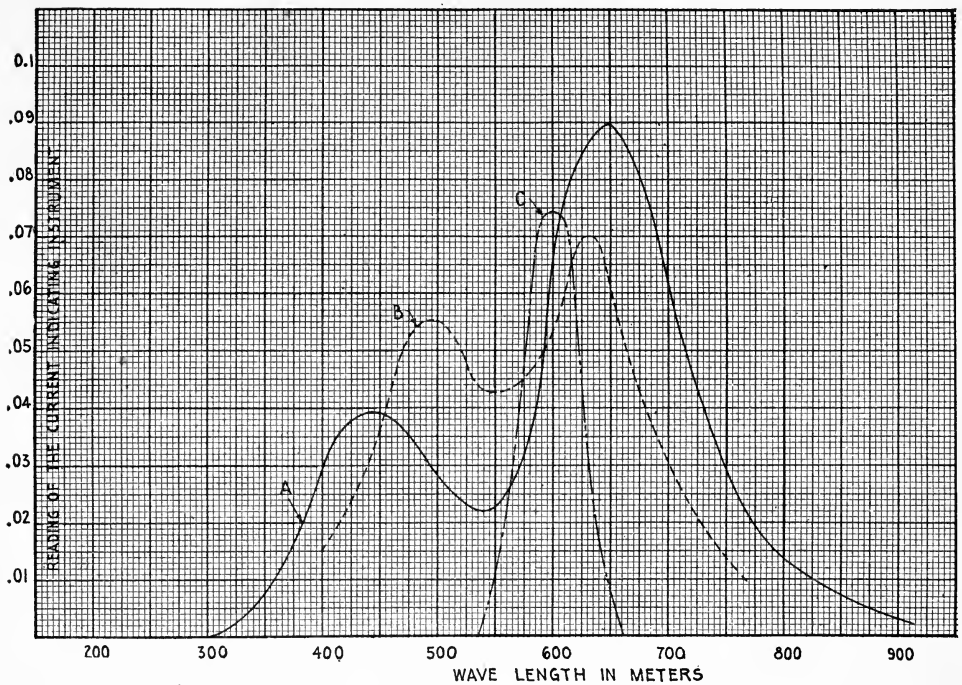

Fig. 240—Curves Showing the Effect on the Radiated Wave By Progressive Reduction of the Coupling at the Oscillation Transformer.

182. "Tight" and "Loose" Coupling.—The adjustment of the coupling of an oscillation transformer is important because if the primary and secondary are closely coupled, oscillations of two frequencies occur in the antenna circuit as shown by the curve A, Fig. 240. If the coupling be reduced (by drawing the primary and secondary windings apart) and a second resonance curve obtained, the two frequencies tend to merge into one as shown by curve B, Fig. 240. Further reduction of coupling brings about the condition shown by curve C in which the energy radiated is confined to practically a single frequency of oscillation. The wave C may be of greater or lesser amplitude than waves A and B, according to conditions.

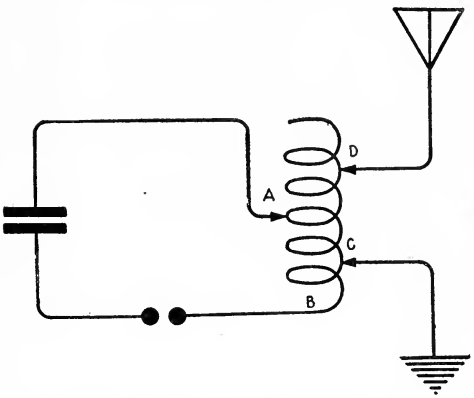

Fig. 241—Showing How Loose Coupling Can Be Obtained With an Auto Transformer.

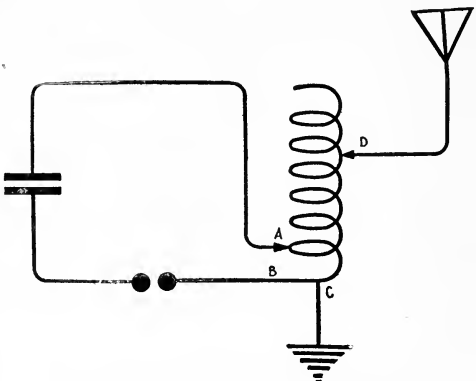

Fig. 242—Another Method for Obtaining Loose Coupling With an Auto Transformer.

A popular opinion seems to exist that the required loose coupling for radiating a *pure and sharp wave* can only be obtained by use of the inductively coupled oscillation transformer. Contrary to this belief, however, a pure wave can be obtained by other methods of coupling as well. Take, for example. the auto-transformer shown in Fig. 241. By the use of three

contact clips, the turns for the aerial circuit can be included between C and D and for the primary circuit between A and B. With the taps in this position, the mutual inductance is reduced and the coupling in accordance. The radiated wave may therefore possess a damping factor as low as that obtained with the inductively coupled system.

If the coupling requires still further reduction, contacts C and D are moved upward and away from A, B, care being taken to keep the same number of turns between C and D in order to maintain resonance.

Loose coupling can be obtained as shown in Fig. 242 where the condenser C is of such capacity that to obtain resonance with the antenna circuit only one-half turn is required between A and B. Hence, the mutual inductance between the open and closed circuits is small and the radiated waves approach unity.

Form 41

S. S. CAROLINA Date 3-10-16 Tuned by P. B. COLLESON

TUNING RECORD

Call Letters KGB Type of Equipment 2 KW. 500~ Q/R

Aerial Type T No. of Wires 4 Aerial Natural 351

WAVE-LENGTH —	300	450	600	
Primary	1 1/4	1 3/4	4 1/4	Turns
Secondary	6	4 1/8	4 15/16	"
Loading Coil (Fixed)	8 1/4	4 1/2	12 3/4	"
" " (Var.)	3 ±	3 ±	3 ±	"
Short Wave Condenser	IN	OUT	OUT	In or Out
Radiation Quenched	3.0	11.0	14.5	Amperes
Decrement	0.125	0.10	.055	
Radiation Rotary	2.0	7.0	10.0	Amperes
Decrement	0.15	0.10	.055	

Aerial Capacity ——— M'f'ds

Condenser Jars (Parallel)

300 — 3

450 — 6

600 — 6

Coupling 2 FOR QUENCHED 8 FOR ROTARY

Fig. 243—Ship Tuning Record (American Marconi Company).

183. Measurement of High Voltages.—The maximum voltage per alternation of a high voltage current can be obtained by the sphere gap method. Two brass spark balls, two centimeters in diameter, are mounted on an insulating base and arranged so that the length of the gap can be increased or decreased by a micrometer adjustment.

The gap is then connected to a given source of high voltage current and the gap lengthened until sparking just ceases. For a given separation of the electrodes, the voltage corresponding thereto is shown in the following table:

Spark Length in Millimeters.	Voltage.	Spark Length in Millimeters.	Voltage.
1	4,700	16	41,300
2	8,100	18	44,700
3	11,400	20	47,400
4	14,500	22	49,800
5	17,500	24	52,000
6	20,400	26	54,000
7	23,250	28	55,800
8	26,100	30	57,500
9	28,800	32	59,000
10	31,300	34	60,400
11	33,300	36	61,800
12	35,500	38	63,000
14	38,700	40	64,200

184. Tuning and Adjustment Record.—After a radio transmitter of any type has been adjusted by a Marconi Inspector, a complete tuning record is posted in the operating room. A typical record is shown in Fig. 243, which, as will be observed, indicates the number of turns in the primary and secondary windings of the oscillation transformer, also in the loading coils for each of the three standard wave lengths. In the event of repairs being made, the adjustments noted on this record must positively be duplicated.

In counting the helix turns for any standard wave, the operator should note first, the point on the helix at which the circuit begins and also the general direction of the turns for an increase of inductance. He should then be sure to count the number of complete turns of inductance and not merely the bonds on the helix.

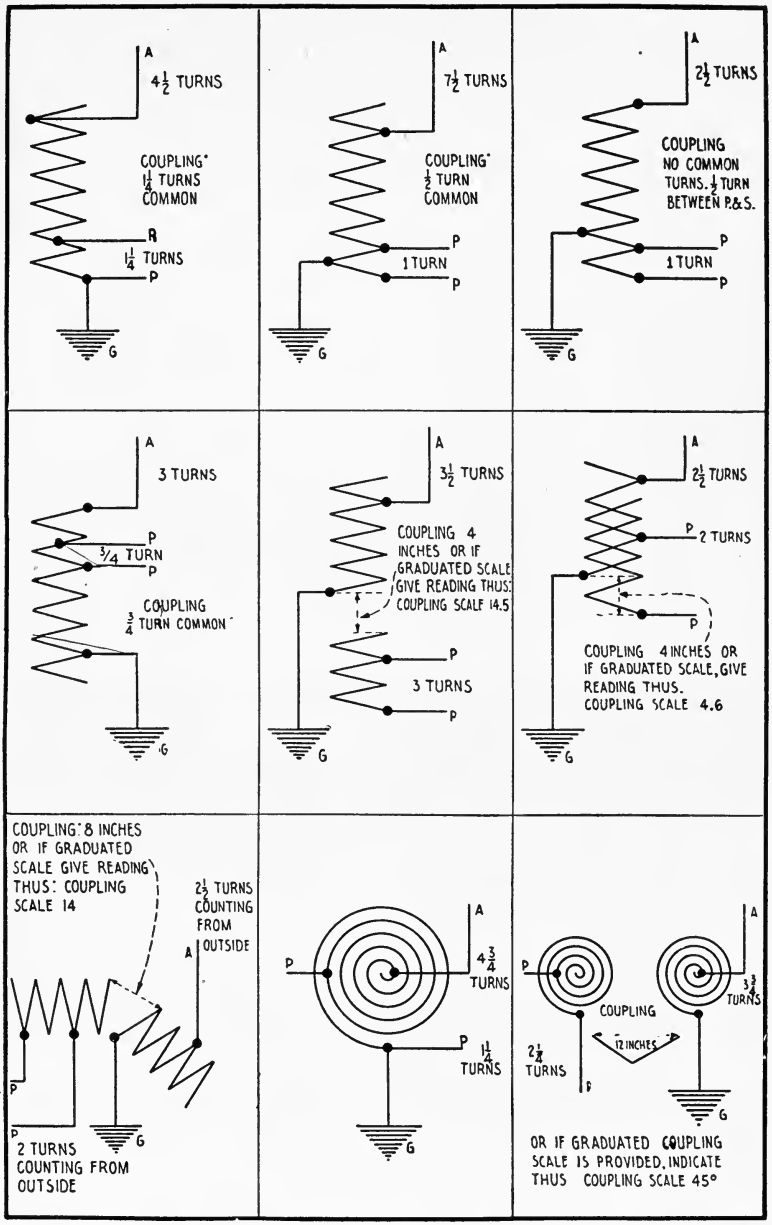

Fig. 244—The Method of Checking up Coupling and Turns of a Helix as Authorized by the U. S. Government.

The tuning adjustments of the quenched spark discharger are invariably rather critical and, therefore, the settings of inductance noted on the tuning cards must be more closely duplicated than for sets employing simple types of spark dischargers. A slight variation of the antenna inductance is permissible from time to time to compensate for detuning occasioned by sagging of the wires.

The *coupling reference* at the bottom of the card refers to the coupling of the primary and secondary windings on the panel sets shown by the scale attached to the coupling handle. The notation "8 for rotary" means that the coupling for the rotary gap is less than for the quenched gap or at least the primary and secondary windings have greater separation than for the quenched gap.

The notation *condenser jars* refers to the number of jars in use in the closed circuit.

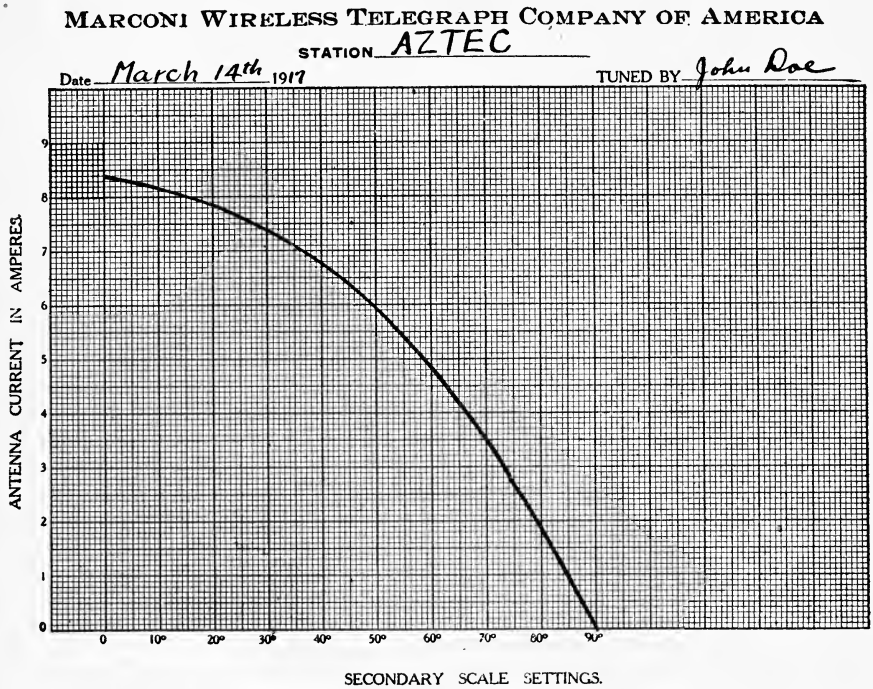

Fig. 245—Curve Showing Reduction of Current by Turning the Secondary Winding of the Type A Oscillation Transformer at Right Angles to the Primary Winding.

Diagrams showing the different ways Government Inspectors record the coupling and the number of primary and secondary turns for the standard wave lengths are shown in Fig. 244 which is a duplicate of the drawings printed on the back of the Government tuning record (form 766). Duplicates of these sketches are drawn in on the Government tuning record by the Government Inspectors and the exact number of turns for the standard waves in either circuit plainly marked for operator's reference. In certain standard types of Marconi apparatus, a diagram showing the turns in use is not required; the inspector merely marks the number of turns for the standard waves in both the primary and secondary windings.

We have shown in paragraph 103 how the *coupling of the type A oscillation transformer is reduced by turning the secondary winding at an angle to the primary.* It is also mentioned in paragraph 202 that the antenna current can in this way be progressively increased from zero to maximum.

In the curve shown in Fig. 245 the antenna current corresponding to various angles of the secondary winding is plotted in the form of a curve. Such records are posted in the operating room. It will be observed in Fig. 245 that when the secondary winding bears an angle of 90° to the primary winding, the antenna current is zero, but, as the secondary winding is turned towards maximum coupling, the antenna current gradually increases to 8½ amperes. By giving careful attention to the data shown in Fig. 245 the operator is enabled to communicate with ship or shore stations with the minimum of interference, using such values of antenna current only as will enable the desired distance to be covered. There is no hard and fast rule to lay down for determining the correct value of antenna current for transmitting over a given distance, but after a few experimental trials with various stations, the minimum current for a given range is easily found out.

PART XII.

STANDARD MARINE SETS OF THE AMERICAN MARCONI COMPANY.

PANEL TRANSMITTERS—COMPOSITE TRANSMITTERS.

185. Panel Transmitters. 186. Details of Type P-4 Panel. 187. Description of Apparatus. 188. Complete Adjustment of Type P-4 Set. 189. Type P-5 Panel Transmitter. 190. Description of Apparatus. 191. Complete Adjustment of the Type P-5 Set. 192. How to Remove the Armature of the ½ K. W. Motor Generator. 193. The 1 K. W. Non-Synchronous Discharger Transmitter. 194. Description of the Set. 195. Installation. 196. Adjustment of the 1 K. W. Set. 197. Type "E-2" One-Half Kilowatt, 120 Cycle Panel Transmitter. 198. Details of the Circuits and Apparatus. 199. General Instructions for Tuning and Adjusting. 200. Marconi 2 K. W. 240 Cycle Transmitter. 201. Type P-9 ¼ K. W. Cargo Transmitting Set. 202. Aerial Current and Reduction of Power. 203. General Instructions for the Panel Sets.

185. Panel Transmitters.—In point of efficiency, general utility, economy of space, and ease of installation, the panel transmitter units of the Marconi Company of America excel. Three types are now supplied for marine service known as *Type P-4, P-5 and P-9.* The first has a normal power consumption of 2 K. W., the second ½ K. W. and the latter ¼ K. W.

The 2 K. W. set has a daylight range of 450 to 650 miles, 1,500 to 2,500 miles after dark. The ½ K. W. set has a daylight range varying from 250 to 400 miles, 600 to 1,500 miles after dark.

Panel transmitter type P-4 is furnished for vessels of large tonnage requiring the maximum possible transmitting range, but type P-5 is particularly suitable for small yachts, cargo-carrying vessels and tug boats. It should be kept in mind, however, that set P-5 or type P-9 have sufficient range to comply with the international regulations on vessels of any tonnage.

Although the ½ K. W. and 2 K. W. panel transmitters are now standard for ship service, a number of vessels in the American Marconi Company's service are still fitted with composite sets popularly known as the "1 *K. W. non-synchronous set*" and the "2 *K. W. 240 cycle set.*" Several vessels are fitted with a ½ *K. W. 120 cycle panel transmitter* (Type E-2) but the manufacture of this type has been discontinued.

In this chapter, all sets now in use in the ship service will be described in detail and such information will be supplied as will enable the operator to adjust the apparatus to its maximum degree of efficiency. The 2 K. W. panel set will first be described.

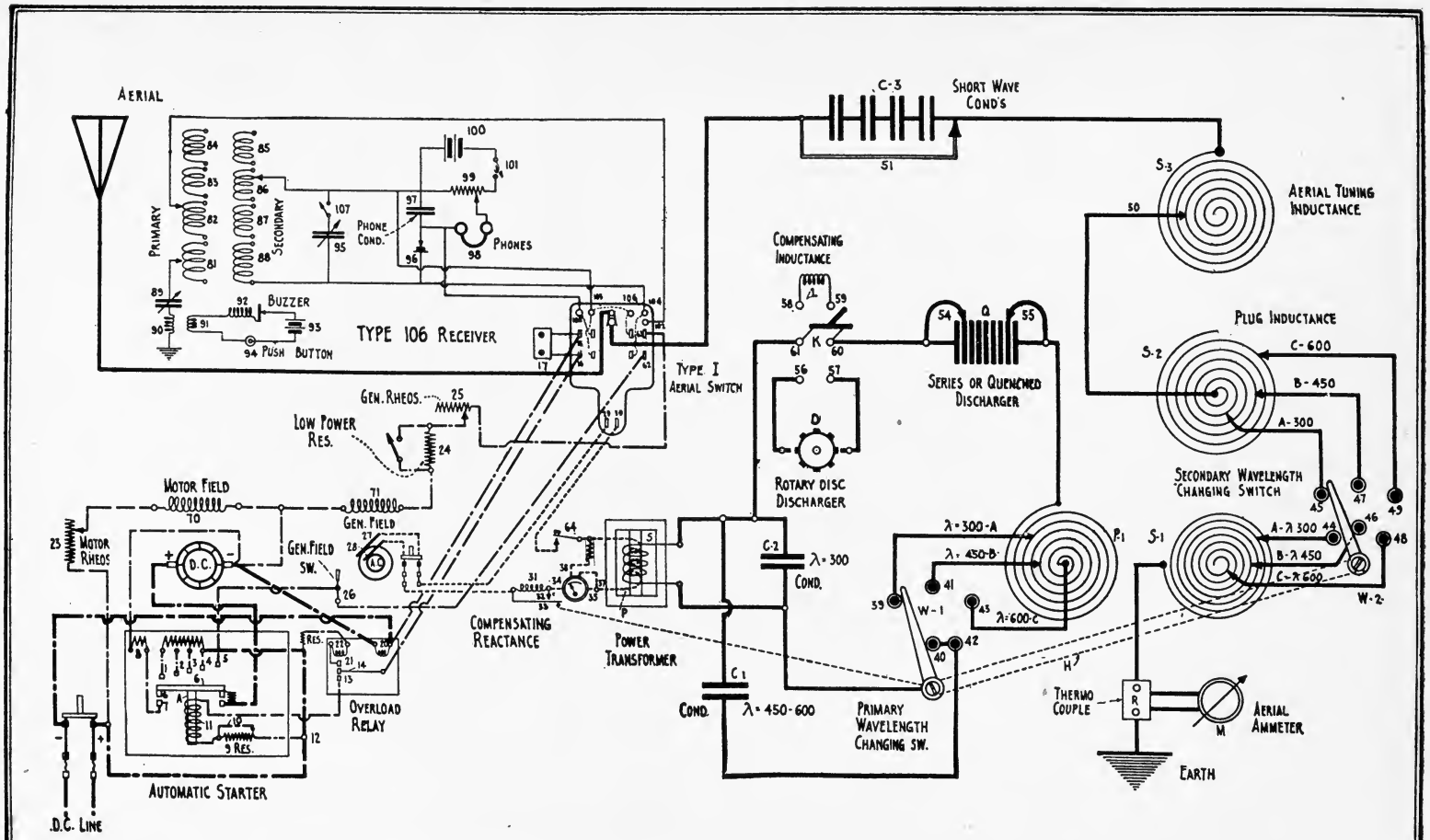

Fig. 246—Fundamental Diagram of Marconi 2. K. W. 500 Cycle Transmitting Set Complete including Type I Aerial Switch and the Type 106 Receiving Tuner.

186. Details of Type P-4 Panel.—The complete 2 K. W. panel set comprises the following apparatus:

(1) **Panel Transmitter consisting of the necessary power measuring instruments, oscillation transformer, condenser, variable and plug type aerial tuning inductance, quenched spark gap, motor and generator field rheostats, wave length changing switch, several resistance units and a compensating reactance regulator.**
(2) **Crocker-Wheeler or General Electric 2 K. W. 500 Cycle Motor Generator with synchronous rotary spark gap mounted on the generator shaft, protective condensers, starting resistance, automatic motor starter and necessary controlling appliances.**
(3) **Type 106 Receiving Tuner with crystal rectifier and head telephone receiver.**
(4) **Type I Aerial Change-Over Switch with necessary appliances for protecting the receiving apparatus from the transmitter.**
(5) **Type C Transmitting Key.**
(6) **High Potential Closed Core Transformer.**

In addition to the foregoing apparatus, the owners of the vessel supply a 60 *cell storage battery* and a *charging panel* fitted with the necessary appliances for controlling the charging circuits. With an aerial equipment like that described in paragraph 117, the foregoing apparatus completes a standard marine wireless telegraph equipment.

A simple fundamental diagram of the complete circuits of the type P-4 transmitter and receiver is shown in Fig. 246, a front view of the panel in Fig. 247, a side view in Fig. 248 and a rear view in Fig. 249.

187. Description of Apparatus.—The *motor generator* consists of a 4 H. P. 110 volt 2 pole direct current *motor* connected directly to a 2 *K. W.* 500 *cycle alternator.* The motor is specially constructed to operate with little variation of speed on pressures varying from 95 to 115 volts.

The *generator* is of the rotating armature type, having a normal open circuit voltage of 350 volts, and a working or load voltage of 140 volts. The voltage of the generator is varied by a rheostat of the sliding contact type mounted on the right hand side of the panel, and the speed of the motor by a similar rheostat on the left hand side of the panel. (See Fig. 247.)

An *automatic motor starter* is provided which permits the motor to be controlled from a distant point in the operating room. The starter is of the magnetic plunger type having a piston which travels through a cylinder compressing the air on one side and creating a vacuum on the other. The speed of the armature accelerates uniformly and the time of completing the circuit may be varied by a special adjustment screw attached to the starter.

The starter is fitted with an *electrodynamic brake* which comprises a resistance coil thrown in shunt to the armature when the current to the motor is turned off. By means of this brake, the motor is brought to a standstill within ten seconds.

An *overload relay switch* connected in series with the armature automatically opens the D. C. circuit to the starter solenoid when current in excess of a certain number of amperes passes through the motor windings. In case of overload, the plunger of the starter drops down breaking the main circuit to the motor armature. The circuit of the solenoid then remains open until the main D. C. line switch is opened by hand. If a short circuit exists in any part of the wiring and the power switch is closed again, the relay will open the circuit once more and continue to do so until the trouble is located. *The relay is generally adjusted to open at 35 amperes.*

Each terminal post of the motor generator is connected to one terminal of a *protective condenser* to neutralize differences of potential that may be set up by electrostatic induction from the transmitting apparatus. The opposite terminal of the condenser is connected to the frame of the motor generator and then to earth (see Fig. 79). Six protective condensers are provided for each motor generator, and enclosed in a metallic case. The frame of the motor generator and also the lead covered wires connecting to the apparatus on the panel are thoroughly connected to earth.

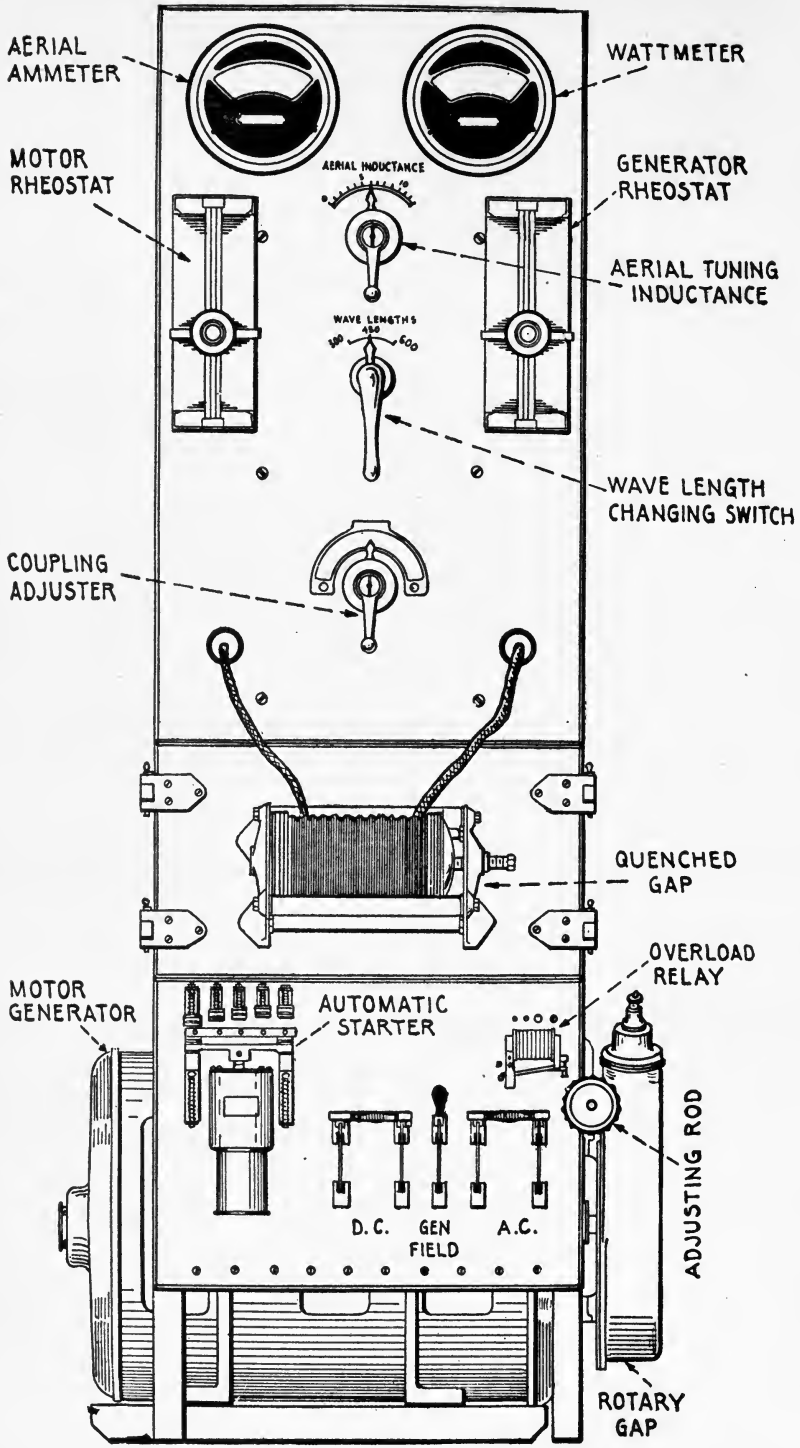

Fig. 247—Front View Marconi 2 K. W. 500 Cycle Transmitting Set.

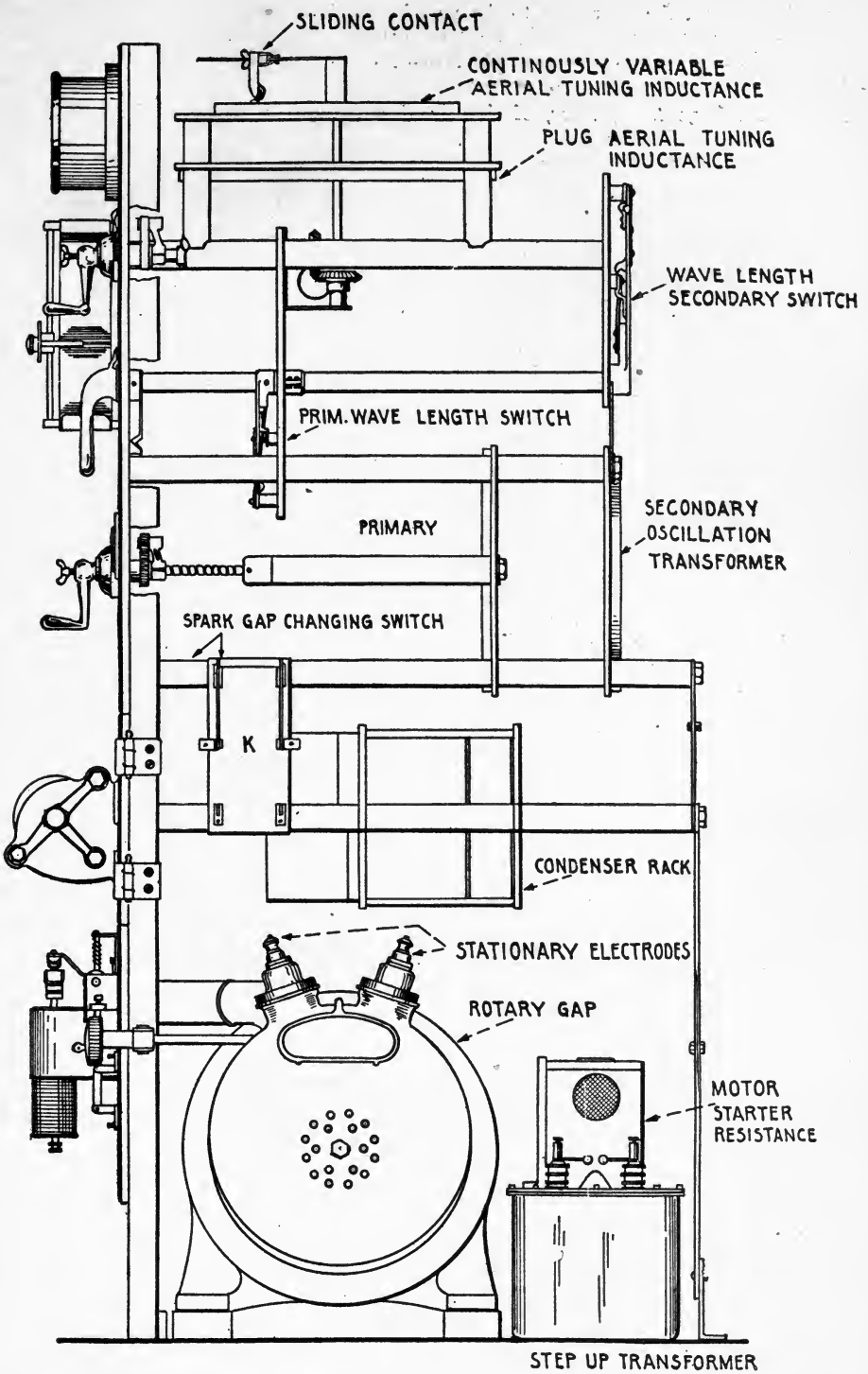

Fig. 248—Side View Marconi 2 K. W. 500 Cycle Transmitting Set.

The circuit from the alternator to the transformer includes a *direct reading wattmeter* for indicating the power consumed by the transformer. The current coil of this instrument is connected in series with the transformer primary and the potential coil is connected across its terminals.

The high voltage *transformer*, of the closed core type, is immersed in a semi-liquid grease. The primary winding is connected to the control panel by means of lead-covered wires which have their covering grounded to the transformer case and to the panel frame. The secondary terminals of the transformer are brought out through two insulators and are mounted thereon. A *protective spark gap* is provided which permits a discharge in case the voltage exceeds a certain critical value. The secondary potential is approximately 12,500 volts. The secondary terminals of the transformer are connected directly to the terminals of the high potential condenser of the closed oscillation circuit. Generally, the transformer is screwed to the floor immediately to the rear of the control panel.

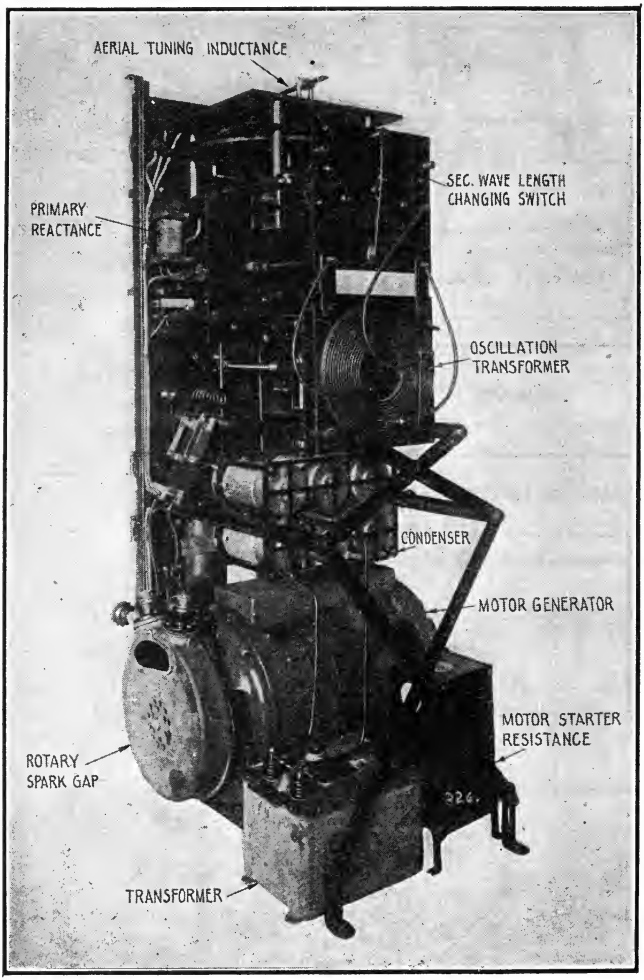

Fig. 249—Rear View Marconi 2 K. W. 500 Cycle Transmitting Set.

The *transmitting condenser* comprises six copper-plated glass jars of .002 microfarads capacity each, three of which are connected in parallel for the 300 meter wave, and six in parallel for the 450 and 600 meter wave. These are mounted in a metal rack, placed directly underneath the oscillation transformer and connected thereto with a multipoint switch to be explained later.

The *oscillation transformer* is of the inductively coupled type, the primary and secondary windings consisting of a strip-copper, spiral wound edgewise on a rectangular insulating support. The secondary turns for the three standard waves are selected by means of three flexible plug connections, but the three taps on the primary inductance for the 300, 450 and 600 meter waves are soldered fast in position, connections being shifted from one wave to the other by means of a multipoint wave-length changing switch.

Two *aerial tuning inductances* are provided, one being a continuously variable inductance having a sliding contact which can be revolved by a handle in the front of the panel, permitting the inductance to be increased or decreased inch by inch. The second aerial tuning inductance, connected in series with this one, is fitted with three plug connections which are placed at positions on the coils corresponding to the 300, 450 and 600 meter waves.

The *short wave condenser*, which consists of 2, 3 or 4 copper-plated jars connected in

series, mounted in a metallic rack, is shown connected in the aerial circuit in Fig. 246. When not in use, the jars are shunted by a flexible conductor or by a switch.

The *aerial ammeter* is a direct current instrument, range 0-20 amperes, its terminals being connected to a thermo-couple which is in turn mounted on a heating wire, the latter being connected directly in series with the antenna system. (See Fig. 53.)

The *Type I Aerial Change-Over Switch* is fitted with the necessary contacts for opening and closing the transformer primary circuit and for protecting the receiving tuner circuits during the periods of transmission. It also disconnects the secondary winding of the oscillating transformer from the transmitter aerial during the receiving period, interrupts the field circuit to the generator, and starts and stops the motor generator. This switch is described in detail in paragraph 155.

The predominant feature of the 2 K. W. 500 cycle set is the specially designed *wave-length changing switch,* the function of which will be fully described in paragraph 188, section d. This switch automatically shifts the coupling, inductance and capacity values for the three standard waves, the entire operation being performed by merely throwing a handle mounted on the front of a panel.

To meet the government requirements, provision is made for transmitting at *low power.* A fixed resistance connected in series with the generator field permits the voltage of the generator to be reduced to the lowest operative condition. The switch marked "low power" shunts this resistance coil, and, when open, only one or two gaps of the quenched discharger are to be employed.

Type P-4 set is equipped with a *synchronous rotary gap,* having 30 sparking points, mounted on the shaft of the motor generator, the disc being thoroughly connected to earth; also a *quenched spark gap* consisting of 15 plates mounted in a metal rack and insulated therefrom. The disc of the rotary gap is fitted with air circulating vanes which force air at uniform pressure through a specially designed air duct to the plates of the quenched gap.

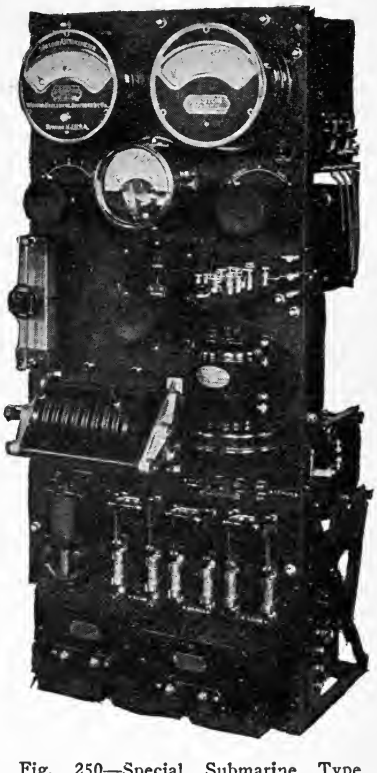

Fig. 250—Special Submarine Type Panel Transmitter (American Marconi Company).

188. Complete Adjustment of Type P-4 Set.—(a) *Plunger Control Automatic Starter.* The plunger of the automatic motor starter should be adjusted to reach the full running position within 12 seconds. A small regulating screw P, Fig. 251, is placed directly underneath the plunger chamber and, if turned to the right, the plunger moves up slowly, but to the left, rapidly. The contacts F, G, H, I, J, which make connection with the crossbar on the plunger K, should be adjusted to complete the circuit to the armature in progression; e. g., one is placed a little bit higher than the other as shown.

Set screw U should be adjusted until lever O of the overload relay is opposite 30 *or* 35 *amperes.* This is approximately the correct setting for average working. The tension on the springs attached to the upper contacts of the automatic starter should be adjusted for firm contact with bar K.

The circuit to the solenoid N is opened and closed at T-1 while contact T closes the circuit to a special magnet winding holding lever O upward in case of short circuit in the power circuits. Contacts Y and Z throw a small resistance coil in series with the solenoid winding after the starter has reached the full running position. A simple fundamental wiring diagram of this starter appears in Fig. 75.

(*b*) *Adjustment of the Spark Note.* In the adjustment of the note of the quenched spark discharger, it is to be understood that the pitch depends upon conditions of resonance between the open and closed oscillation circuits as well as upon the voltage of the generator. *Careful regulation of the voltage, however, is the principal adjustment and the one to be undertaken first* (provided the set has been tuned).

The operator should select a certain number of gaps, say eight, and follow it by varying the generator voltage. After the set has been tuned for maximum antenna current, the *voltage should be slightly readjusted until the spark is clear.*

It is easily seen that if the note is clear and the secondary circuit is thrown out of resonance, less energy will be withdrawn from the closed oscillation circuit, which will increase the voltage across the gap. The pitch of the note will therefore be destroyed.

The rule to be followed is, *tune the set first;* afterwards *adjust the gaps and voltage* until the note is clear and the wattmeter indicates 2 *kilowatts.*

The *synchronous rotary gap is adjusted for a high pitched note* by the small brass rod R and knob, Fig. 116, which moves the muffling drum carrying the stationary spark electrodes through a 25-degree arc.

It is also essential that the A. C. voltage be carefully regulated. But the operator should take care that the reading of the wattmeter in no case exceeds 2 K. W. Also he should adjust the length of the discharge gap until the stationary electrodes and the rotary electrodes are separated no more than .01 of an inch. The complete process will perhaps be clearer from the detailed drawing, Fig. 252.

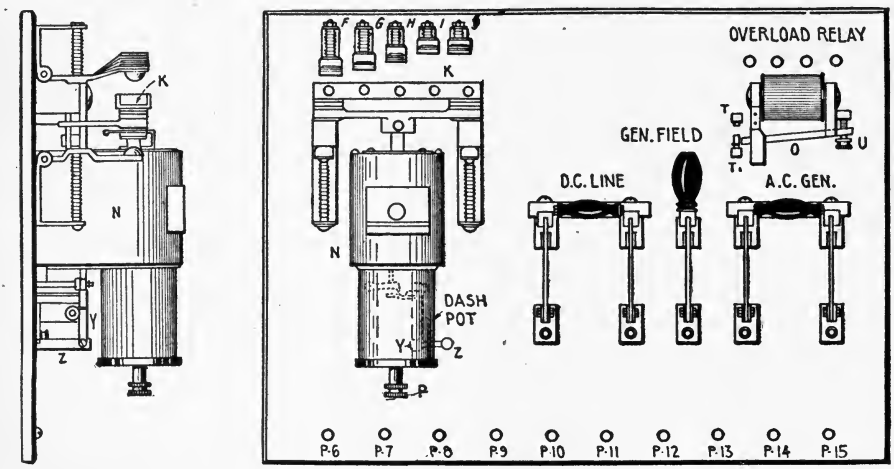

Fig. 251—Automatic Starter Panel (2 K. W. 500 Cycle Transmitter).

It is important that this adjustment be *not* undertaken until the motor is stopped. Then *one stationary electrode* is lowered down by means of the milled screw S until it touches one of the electrodes on the disc. *The electrode is then raised to just miss the rotating electrodes when the disc is turned over by hand.* Similarly the other stationary electrode must be lowered until it touches the disc electrodes and then raised until it clears the entire set of spark points on the disc.

Each turn of the nut S represents a radical movement of .037 of an inch and as there are eight holes equally spaced in the face of the nut (which engage the pin P), the movement of one hole represents a radial movement of approximately .005 of an inch. The length of the spark discharge gap is adjusted correctly when the electrodes on the disc and the stationary electrodes are separated .005 *of an inch to* .01 *of an inch,* and, after they have been so adjusted, the muffling drum should be shifted backward or forward until a uniform clear spark note is obtained.

(*c*) *Details of Quenched Gap.* A detailed front view of this spark gap partly in section is shown in Fig. 253. The quenched gap consists of a number of copper discs or plates such as O, O, having circular sparking surfaces J separated by paper washers which are specially treated with an insulating varnish. These plates are set in a trough and clamped together with such pressure that the space enclosed between the discs is airtight. *A disc or insulating material F is placed against the end plates to insulate the gap from brackets K and C.* Contacts P and Q, which extend to the condenser and oscillation transformer, may be plugged into the cooling flanges of any of the plates. Nuts D, D brace the end castings K and C.

Operators of the Marconi service should give the following instructions careful consider-

ation: *In setting up the quenched gap care should be taken to keep the spark surfaces J absolutely clean and smooth.* The paper discs or washers N should also be scrupulously clean. Fifteen plates are stacked up in the rack and pressure applied through the pressure bolt B, which is locked in position by the nut A. This screw should be taken up with a 10-inch monkey wrench.

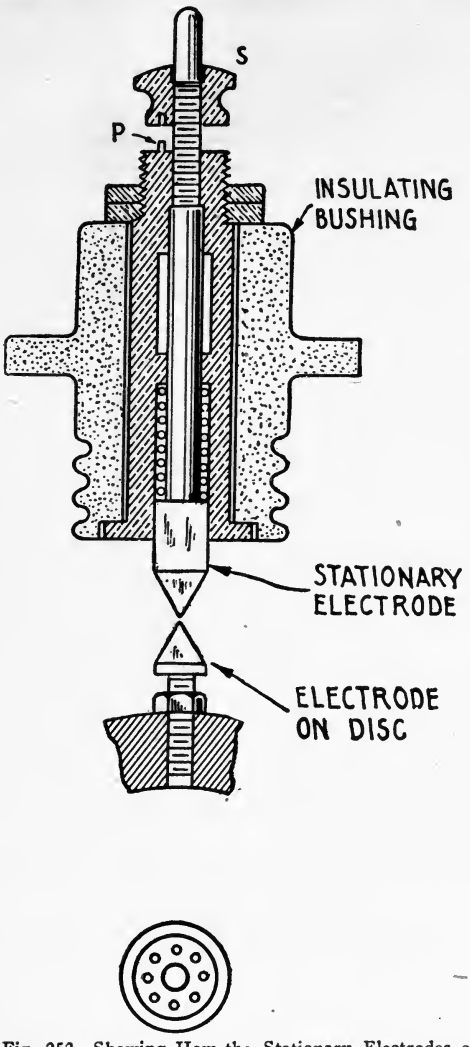

Fig. 252—Showing How the Stationary Electrodes of the Marconi Synchronous Gap are Adjusted.

If the gap is not airtight the spark note will be irregular. This is a positive indication that the gap is leaking and it should therefore be taken apart and the sparking surfaces cleaned and reassembled, using new gaskets if necessary. The gap should not be used over an extended period if it once starts leaking.

In case one of the gaps become defective it can be short-circuited by means of a *metal contactor* which is furnished especially for that purpose. The defective gap can be detected by means of a short circuiting contact mounted on an insulating rod called a *test rod.* The gaps can be successively short-circuited and the defective one will be located by there being no sparking at the tips of the contactor.

In event the gap is taken apart, before being reassembled, *the sparking surfaces of the copper plates must be cleaned and smoothed off by means of very fine sandpaper.* Care should be taken to keep the surfaces perfectly flat during the cleaning so that the opposing surfaces will be parallel when they are placed in the rack. When the gap is in proper working condition, the sparking surfaces show a uniform coloring over the whole area. *If the surfaces of the plate are black or dark colored,* it is an indication that the gap is not airtight.

If it becomes necessary to disassemble the gap, after reassembly, the spark must be discharged through the series of plates continually for one or two hours. In fact, the note will not be clear until the gap is thus "seasoned."

(*d*) *Tuning and Wave-Length Changing Switch.* It has long been the desire of radio engineers to fit the transmitting apparatus with appliances whereby the wave-length of the transmitting set could be quickly changed by merely throwing a switch, but the requirements of radio-frequency circuits would not permit this to be done without certain mechanical and electrical considerations.

For example: With the potentials employed in radio-telegraph transmitters, the switch to perform these functions must possess first-rate insulating qualities. The associated circuits and leads thereto must be widely separated and in addition they must not be of too great length in order that the length of the radiated wave may be kept within restrictions. Again the component parts of the complete switch cannot be placed in any convenient mechanical position but must perform their functions near to the portion of the circuit in conjunction with which they operate. Additional considerations are involved obvious to the radio engineer, but not of sufficient importance to be gone over in detail.

The complete process of tuning of the 2 K. W. 500 cycle set, and the locating of the taps

on the secondary turns of the oscillation transformer may appear difficult to the unskilled operator, but is easily accomplished by the trained engineer or inspector.

The function of the wave length changing switch and the tuning of the 2 K. W. 500 cycle set will be described in detail and reference should be made particularly to Fig. 246 showing the complete circuits of the apparatus.

First it should be noted that when the quenched spark discharger is cut in the circuit, the coupling between the primary and secondary windings is varied by varying the number of turns in the secondary winding only, the primary and secondary coils being placed in a fixed mechanical position, but for the synchronous rotary spark gap they are drawn apart to whatever degree of separation is necessary to radiate a pure wave. In certain installations the primary and secondary windings may be placed in a fixed mechanical position for the rotary discharger as well as for the quenched gap.

(1) *Explanation of the circuits.* It will be observed from the diagram, Fig. 246, that these sets are fitted with a change-over switch which permits either the *rotary disc discharger* or the *quenched spark discharger* to be cut in the circuit. The gaps are connected in series and to change from one to the other, it is only necessary to shift the position of the switch K. When the quenched discharger is in use, a compensating inductance L, Fig. 246, makes up for the length of leads connected from contacts 58 and 59 to the rotary disc discharger, thereby keeping the wave-length of the closed oscillatory circuit constant. *When the rotary*

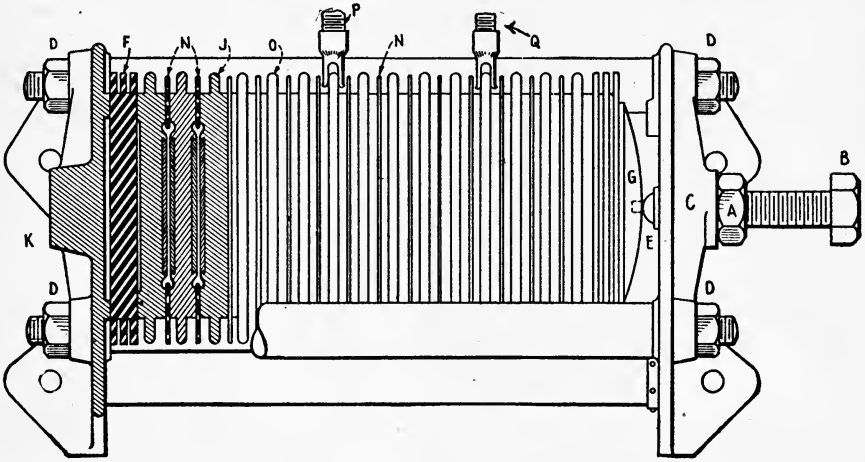

Fig. 253—Detailed Sketch of Marconi Quenched Spark Gap.

discharger is connected in the circuit, the flexible leads attached to the quenched gap plates must be connected together.

In the diagram, Fig. 246, the *high potential transformer* of the set is represented by the primary and secondary windings P and S respectively; the *high potential condensers* at C-1 and C-2; the primary winding of *the oscillation transformer* at P-1, *the secondary* at S-1; also an *aerial tuning inductance* S-2 with flexible contacts A, B and C, and, in addition, a continuously *variable tuning inductance* S-3. The antenna system further includes the *series condenser* C-3 and the *aerial ammeter.* The distinctive feature of this apparatus is the *primary wave-length changing switch* W-1 operated simultaneously by a single handle in conjunction with the *switch* W-2. It will be observed that when W-1 is in contact with point 39, a single unit of the condenser C-2 (three jars in parallel of 0.002 microfarads each) is connected in series with the primary winding of the oscillation transformer at point A, i.e., the adjustment for 300 meters.

Similarly, W-2 closes the aerial circuit to contacts 44 and 45, which connect in the correct number of turns to radiate the 300 meter wave. Contacts A, B and C of S-1 and S-2 may be plugged in at any point on the secondary coil, but they are permanently attached to the coil after the set has been tuned to the three standard waves. Further movement of the handle connects together contacts 40 and 41, which not only connects in the correct number of primary turns for the wave-length of 450 meters, but also connects the condenser units C-1 and C-2 in parallel, giving a total condenser capacity of 0.012 microfarads. Still further movement of the switch closes contacts 42 and 43, also contacts 48 and 49, which connect in

the correct number of turns, in both the open and closed oscillatory circuits, for the standard 600-meter wave.

(2) *The Process of Tuning.* Before undertaking to tune a set of this type, the student should thoroughly consider the following facts:

(1) In order to obtain the maximum flow of antenna current, a different degree of coupling at the oscillation transformer must be found for each of the standard waves.

(2) In order that the radiated waves can be rapidly changed by simply throwing a switch, the primary and secondary windings of the oscillation transformer must remain in a fixed position mechanically.

(3) The coupling of the oscillation transformer is then varied for each standard wave by changing the self-inductance of the secondary, i. e. cutting in or out turns.

Now the correct number of turns for the secondary winding is determined for each of the standard waves experimentally, as follows:

For preliminary determination at a standard wave-length, say 600 meters, a trial number of turns (4 to 6 turns) is selected at the secondary winding S-1 through the flexible plug contact C. This having been done, a second trial number of turns, say 4 turns, are cut in at S-2. Turns are added or subtracted at the aerial tuning coil S-3 (with the spark gap discharging) until the aerial ammeter indicates a maximum deflection. The adjustment for resonance having thus been located, the windings P-1 and S-1 are drawn apart or placed closer to ascertain if an increase of antenna current will result. If separation of P-1 and S-1 increases the antenna current, it indicates that too many turns have been included at S-1 for the mechanical position of the coupling coils selected at the start; and, in consequence, turns must be taken out at S-1 and additional turns cut in at S-2 or S-3, until resonance is secured. The primary winding P-1 must, however, first be placed in its original fixed position relative to S-1. The correct number of turns must now be found out for the standard waves of 450 and 300 meters, that is, the correct number of turns must be selected and the coupling adjusted until the maximum antenna current for each wave is secured with P-1 remaining in a certain fixed position to S-1. At first sight, it may seem difficult to locate the correct position for contacts, A, B and C, on S-1 and S-2, but from the experience obtained by tuning several sets, approximately correct inductance values may be selected at sight. It should be understood that the positions of A, B and C on the primary and secondary coils shown in Fig. 246 do not necessarily represent their relative positions in actual commercial practice. With aerials of different capacity, inductance, and resistance, decidedly different positions must be located. For example: At the wave-lengths of 450 and 600 meters, less inductance may be required at point C than at point B for these two wave-lengths, or vice versa.

Careful consideration of the foregoing procedure will reveal that (1) the continuously variable inductance S-3 aids in locating the number of turns to be finally connected in at S-2; (2) S-3 gives a fineness and quickness of adjustment which the coil S-2 with a flexible contact does not afford; (3) the mechanical variation of the coupling between P-1 and S-1 permits the correct number of turns to be selected much more quickly than by experimental trials with the plug contacts.

It is now clear that after the set has been completely tuned, in order to change from one standard wave-length to the other, the operator needs only to shift the handle of the switches W-1 and W-2, with the exception that on the 300-meter wave, the short wave condenser C-3 must be connected in series with the aerial system. In certain ship installations, the condenser C-3 is connected in series with the lead from contact 45 to the aerial tuning inductance S-2 and when so connected is automatically thrown in series with the antenna system whenever the switch blades W-1 and W-2 are shifted to the 300-meter position.

Because of the perfect quenching secured with this particular type of gap P-1 may remain in a fixed mechanical position relative to S-1 throughout the series of wave-lengths, but when the rotary disc discharger is employed, unless a complete new set of positions is located for contacts A, B and C of S-1 and S-2, P-1 must be drawn away from S-1 to secure a pure wave. P-1 might have to be placed from eight to ten inches away from S-1 to radiate a pure wave with the rotary gap.

The primary and secondary wave-length changing switch performs another function which has not been mentioned: *When the switch is in the 300-meter position, a reactance coil is automatically connected in series with the primary winding of the power transformer*

to reduce the power to a value commensurate with the decreased secondary condenser capacity. The transformer then consumes 1 k. w.

During the tuning of these sets it has been observed that if initial adjustments are made near to metallic dock buildings, the effective antenna resistance is altered, *and, in consequence, the tuning adjustments for maximum antenna current, need to be changed slightly when the ship is at sea.* Generally it is only necessary to vary slightly the inductance of S-3 for maximum aerial current.

After the set has been tuned in this manner, the purity of the wave and decrement of the oscillations is measured by means of a wavemeter with a current indicating instrument connected in series, such as a wattmeter.

The commercial value of a transmitting set equipped with these features cannot be overestimated. The operator having at his disposal three standard wave-lengths, any of which may be brought instantly into play, can literally pick his way through the congested radio atmosphere, changing from one wave-length to the other as operating conditions may require.

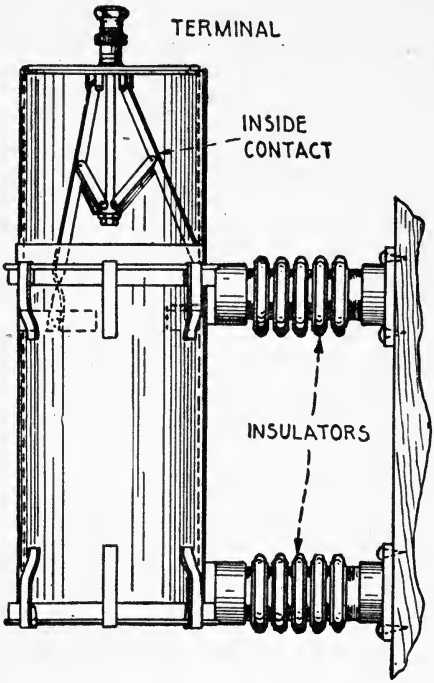

Fig. 254—One Type of Marconi Short Wave Condenser. (See Fig. 128)

(*e*) *Type* 106 *Tuner.* The working and adjustment of this tuner is completely covered in paragraph 138 of Part IX.

(*f*) *Short Wave Condenser.* This condenser consists of 2, 3 or 4 jars connected in series. Owing to the variation in the capacity of commercial aerials, the correct capacity for the short wave condenser is best determined by experiment. Two standard jars in series have capacity of .001 mfds.; three in series .00066 mfds., 4 in series .0005 mfds. Aerials having a natural wave-length of 250 meters do not require a short wave condenser for three standard waves. A side view of one type of short wave condenser is shown in Fig. 254.

(*g*) *Spark Gap Change-Over Switch.* To *change from the quenched to the rotary gap,* a small D. P. D. T. switch is connected in the circuits of radio-frequency. When the rotary gap is connected in the circuit, the *quenched gap is placed on short-circuit by connecting together the contact clips.*

189. Type P-5 Panel Transmitter.—In many respects this set duplicates the type P-4, but there are certain mechanical modifications. The motor generator and the transformer are mounted on the panel frame together with the remainder of the equipment. Both the rotary synchronous discharger and the quenched discharger are supplied. A compensating inductance joined to the change-over switch permits the use of either spark discharger without change of the wave-length of the closed oscillation circuit.

A fundamental circuit diagram of the automatic starter for this set has been shown in Fig. 74 and a more detailed diagram is now presented in Fig. 255. The circuits of radio-frequency are shown in Fig. 256; a front and side view of the panel in Fig. 257 and Fig. 258 and a rear view in Fig. 259.

190. Description of Apparatus.—The *motor generator* comprises a 110 volt direct current motor directly connected to a ½ K. W. 120 volt 500 cycle alternator.

The *motor* is designed to operate on pressures between 95 and 115 volts with little change of speed. The initial speed is controlled by a rheostat mounted on the left hand side of the panel.

The *generator* is of the inductor type having a stationary armature and field winding, the flux being varied by a rotor of soft iron. (See photo, Fig. 67.) The open circuit voltage

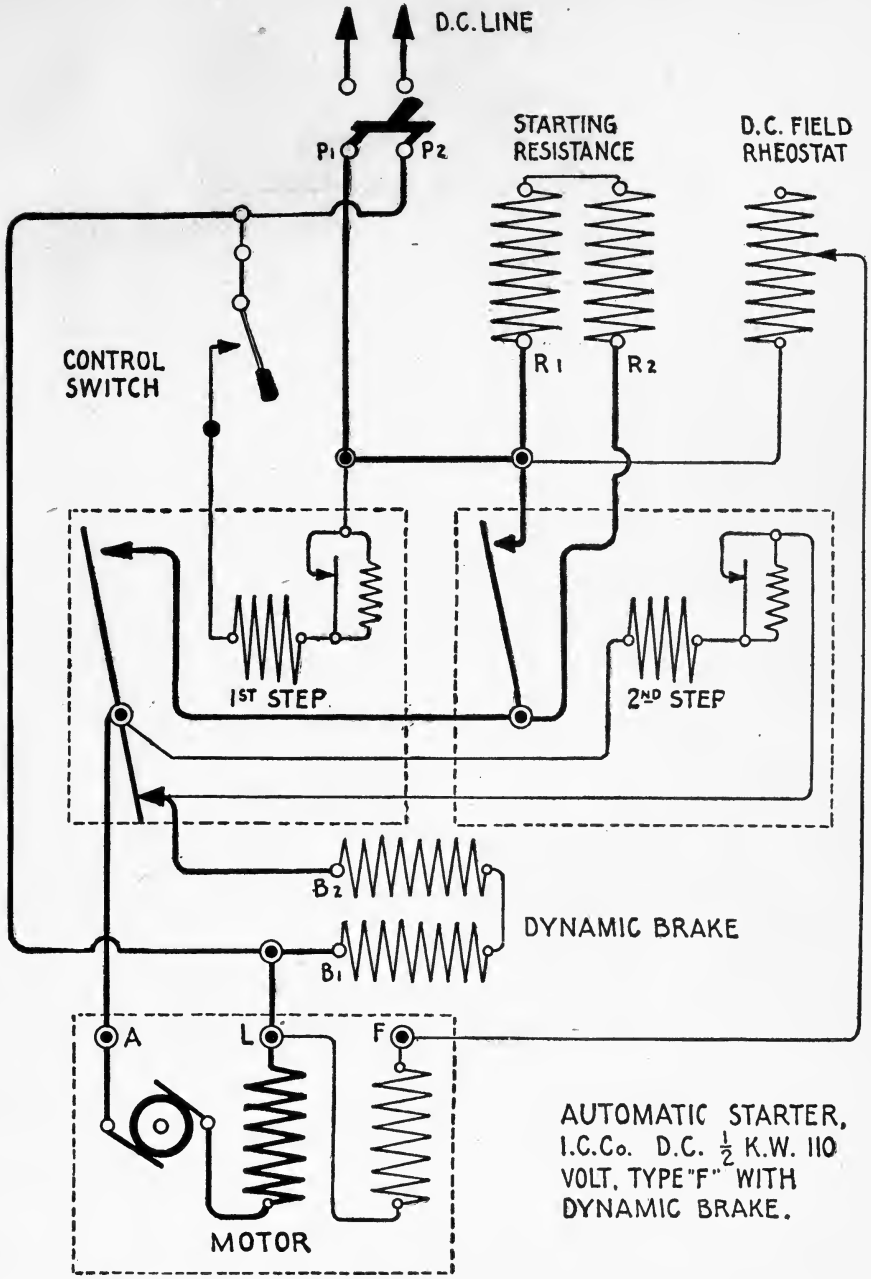

Fig. 255—Fundamental Wiring Diagram of the Automatic Starter Furnished With the Marconi ½ K. W. 500 Cycle Transmitter. (See Fig. 74 and Section J in Appendix)

of the generator is approximately 350 volts and the load voltage about 120 volts. The normal speed of the machine is 2,500 R. P. M. The voltage at the armature terminals can be varied by the field rheostat mounted on the right hand side of the panel. The low power circuits are protected by the usual set of protective condensers.

A *closed core transformer* having a secondary potential of 14,500 volts is supplied and is fitted with an appropriate safety gap.

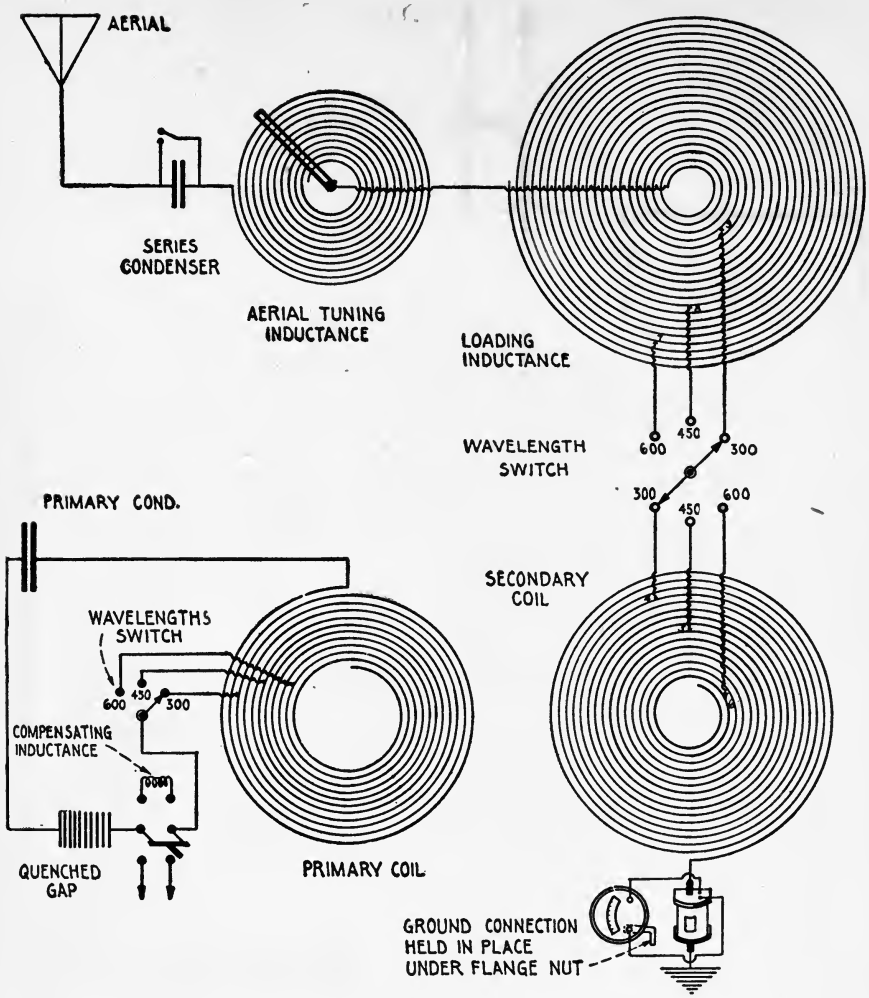

Fig. 256—Radio Frequency Circuits of the ½ K. W. 500 Cycle Transmitter.

The circuits of radio-frequency (Fig. 256) are similar to the 2 K. W. set with the exception that a condenser of fixed capacity is employed throughout all wave lengths. Also the secondary winding is moved away from the primary for change of coupling, which is the reverse of the method employed in the 2 K. W. set. However, the change of wave-length is accomplished in the same manner by a special switch and the primary and secondary windings remain in a fixed mechanical position for all wave-lengths.

The *transmitter condenser* consists of 4 copper-plated small Leyden jars connected in parallel having capacity of .001 mfds. each. These are mounted in a metal rack behind the panel.

This set is also fitted with a *single pole double throw high potential switch* which either connects the aerial to the transmitter or connects it directly to earth for protection against lightning. This switch operates independently of the antenna changeover switch.

The *automatic starter* supplied with this set has been shown diagrammatically in Fig. 74, but the diagram, Fig. 255, outlines the circuits more as they appear on the actual panel. The starter consists essentially of two magnets fitted with armatures, one of which connects the motor armature to the D. C. line through a single resistance coil and the other cuts out this resistance thereby connecting the motor direct to the D. C. line. Appropriate resistance coils are connected in series with the solenoid windings automatically, when the starter

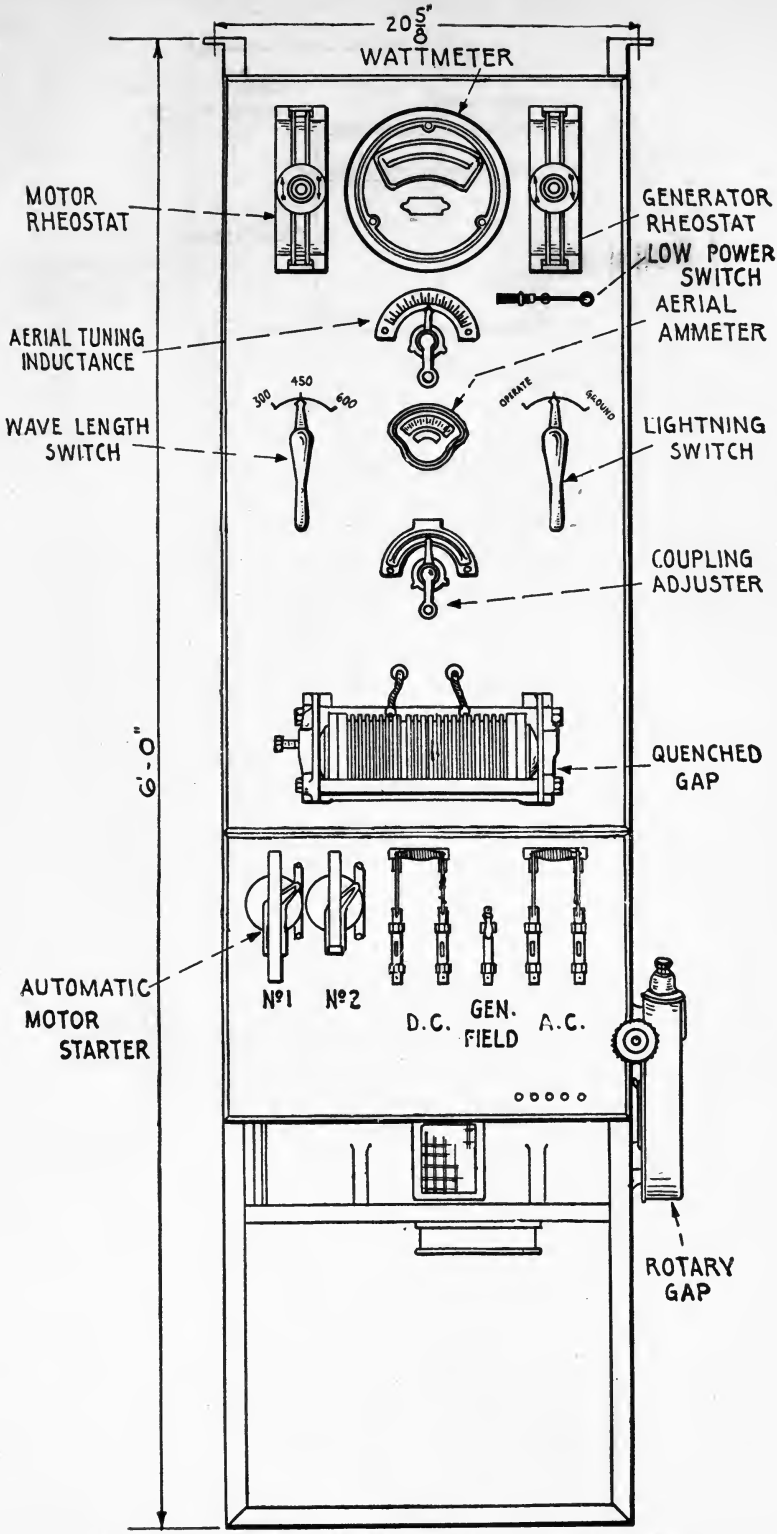

Fig. 257—Front View of the Marconi ½ K. W. 500 Cycle Transmitter.

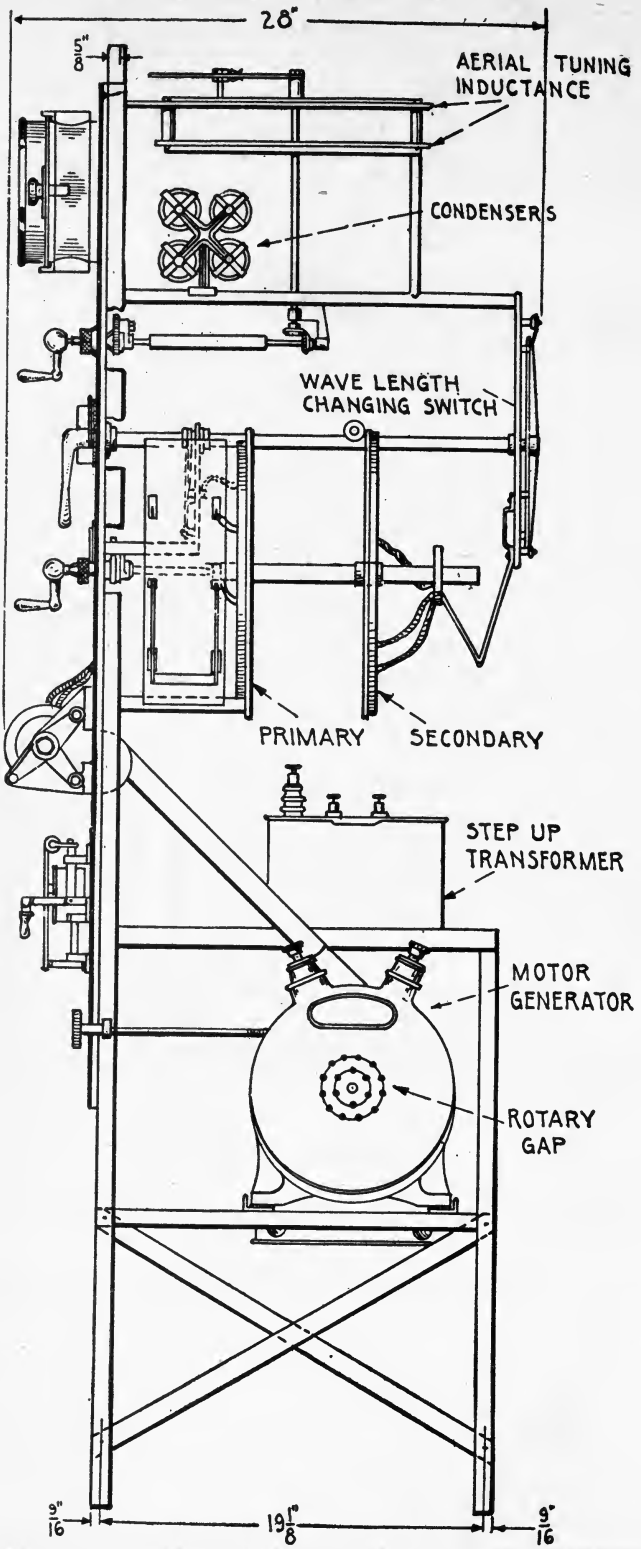

Fig. 258—Side View of the Marconi ½ K. W. 500 Cycle Transmitter.

is in the full running position. This prevents the magnet windings overheating as the potential difference across the motor armature rises. A *dynamic brake* attached to the motor starter consists of a shunt armature resistance, which is connected across its terminals by a special set of contacts attached to the starter.

A 2-pole single-throw switch disconnects the motor from the power line. A single-pole switch permits *the circuit of the generator field to be interrupted* as a matter of safety during adjustment of the set and a second D. P. S. T. switch breaks the circuit from the generator to the transformer.

The remainder of the equipment consists of a *Type I aerial switch, Type* 106 *receiving tuner* and *flush switch* for starting and stopping the motor generator from a distant point. Also an *aerial ammeter,* range 0-10 amperes, and a *direct reading wattmeter,* 0-750 watts.

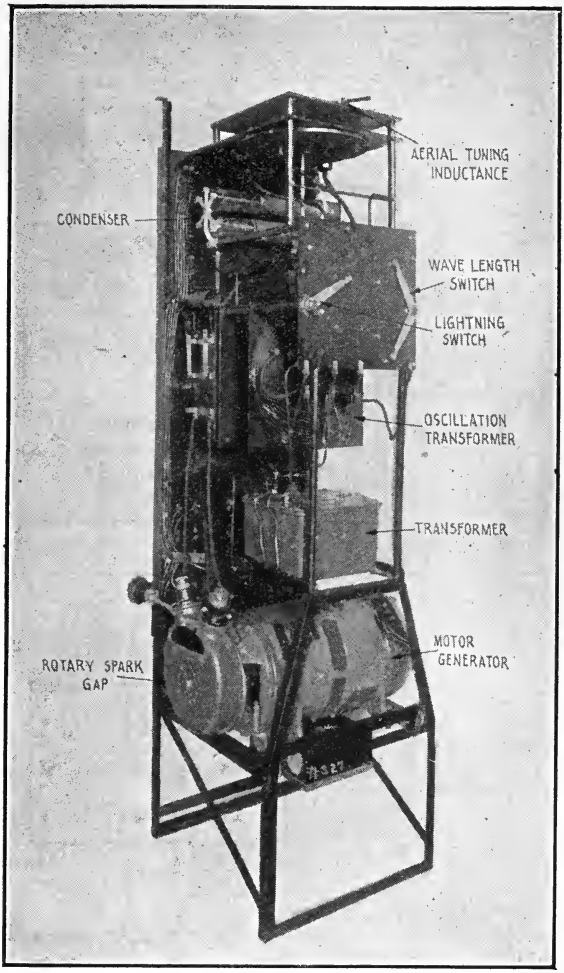

Fig. 259—Rear View of the Marconi ½ K. W. 500 Cycle Panel Transmitter.

191. Complete Adjustment of the Type P-5 Set.—(a) *Tuning.* The tuning of this set, the adjustment of the frequency and the voltage of the alternator and the adjustment of the rotary gap is practically the same as the 2 k. w. 500 cycle set described in previous paragraphs. The adjustment of the quenched gap is identical with the method described for the 2 k. w. set in section b, paragraph 188.

(*b*) *Motor Starter.* The operation of the ½ k. w. starter shown in Fig. 260 is as follows: The cut-out switches of the automatic starter are energized by direct current from the main D. C. line and operated by a distant control switch. When this switch is closed, the solenoid "A" is energized and moves the contact arm C radially in a vertical plane, perpendicular to the board, which cuts in the single resistance unit mounted in the resistance box behind the panel.

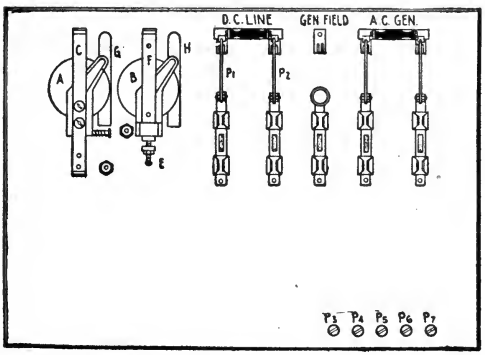

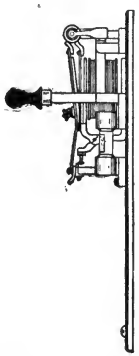

Fig. 260—Automatic Starter Panel (½ K. W. 500 Cycle Transmitter).

As the speed of the motor generator increases, the current falls off, and the potential difference across the armature rises. When it reaches normal value, the solenoid B is energized and draws the contact arm F, cutting out the resistance. This connects full line voltage across the motor.

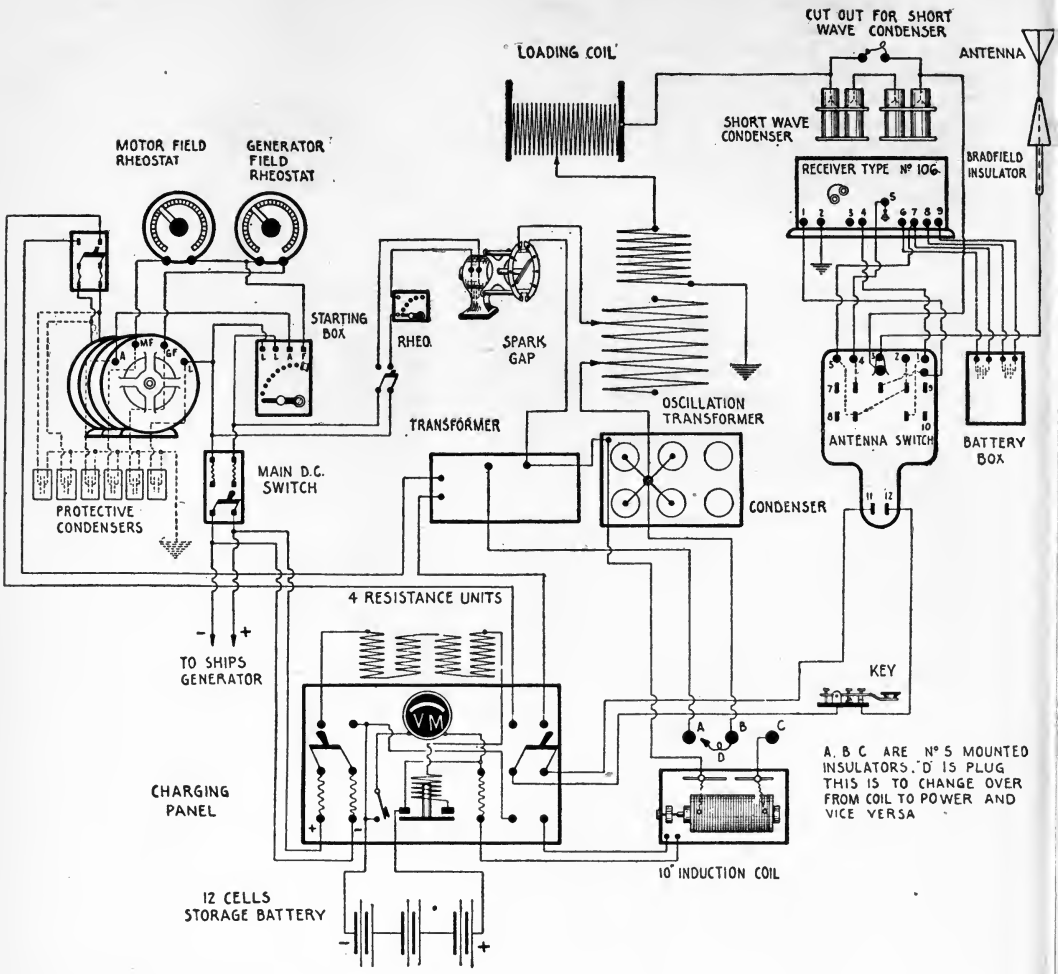

Fig. 261—Complete Wiring Diagram of Marconi 1 K. W. 60 Cycle Non-synchronous Transmitter.

The *time of closing the contacts of the automatic starter* is regulated by the set screw E, Fig. 260, attached to the bottom of the starter arm B. Both solenoids should perform their functions within six seconds from the time the starting switch is closed. Like in the 2 k. w. set, the motor starter is controlled by a special set of contacts mounted on the aerial change-over switch or the motor may be held in a continuous state of operation by closing the flush switch mounted near to the antenna switch. In the later models of this set, when the starter is in full running position, resistances are cut in automatically at G and H to prevent the solenoid windings overheating. (See Section J Appendix).

192. How to Remove the Armature of the ½ K. W. Motor Generator.—To remove the armature for purpose of repair or replacement, it is necessary first to remove the casing of the spark gap, then remove the disc, after which the bearing bracket can be removed from the generator. Next remove the motor brushes after which the armature can be pulled out. When replacing the armature the oil rings should be held up to permit the shaft to pass through the bearings. The oil rings should then be placed in their slots making sure that they move freely.

To remove the disc of the rotary gap, the small machine screw in the shaft key should be unscrewed until it turns freely. A slight tap at the hub will then loosen the key which may be removed by a pair of pliers. After this a slight tap on the hub of the disc will loosen the other half of the key which may then be removed. The disc should then slip off readily.

193. The 1 K. W. Non-Synchronous Discharger Transmitter.—Certain ships in the Marconi service are fitted with a type of transmitter which originally was designed to be operated from a 60 cycle motor generator, with a plain spark gap, but the set is now fitted with a non-synchronous rotary discharger by which the effectiveness and range has been materially increased. A complete circuit diagram of this set is shown in Fig. 261 and the lay-out of the transmitter and receiver in a silence cabin in Fig. 262.

194. Description of the Set.—The motor generator for this set is the "Standard" Robbins and Meyers type. The *motor* is shunt wound for 110 volt direct current.

The *generator* is of 1 K. W. capacity and has an accumulative compound field winding which tends to maintain a constant A. C. voltage under variable load. The generator delivers current at 110 volts, 60 cycles. (See Fig. 65; also Fig. 79a.)

The circuit to the transformer is interrupted by a *type C standard transmitting key.*

The *power transformer* is of the open core type and is designed to operate on 110 volt 60 cycle circuits without external reactance. The secondary voltage is approximately 18,000 volts.

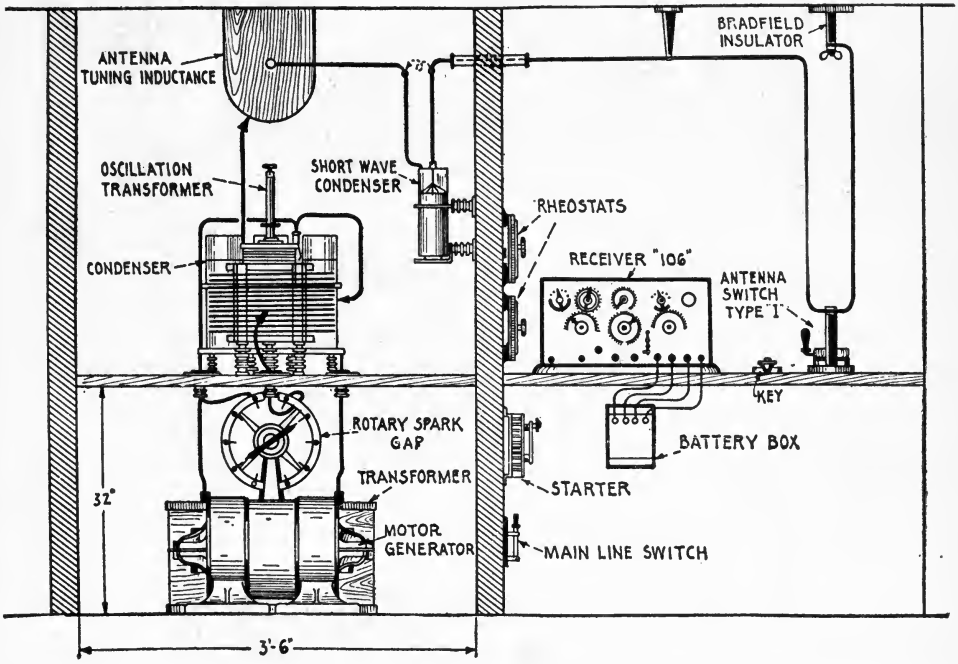

Fig. 262—The Installation of a 1 K. W. Transmitter in a Silence Cabin.

A *hand-operated motor starter* and two *rotary field rheostats* are supplied. The latter are the Cutler-Hammer type.

The *high potential condenser* comprises 6 copper-plated jars of .002 mfds. each, connected in parallel, mounted in a metal rack and insulated from the operating table by corrugated porcelain insulators. Connection between the outside coatings is established through the frame of the rack. Only four jars are required, the remaining two being used as spares.

The *oscillation transformer* has been illustrated in Fig. 119. The primary winding is made of copper tubing mounted on porcelain insulating supports. Tappings may be taken from the primary inductance by means of special spring contact clips. The secondary winding has a fixed number of turns wound about an insulating drum which slides vertically on a brass tube. One terminal of this winding is connected to the tube and the opposite terminal to a terminal of the aerial tuning inductance.

The *aerial tuning inductance* consists of a number of turns of copper cable wound on and insulated from a wooden frame. The required number of turns for any particular wavelength are cut in by means of a contact clip attached to a flexible lead.

The *short wave condenser* consists of four copper-plated jars mounted on a rack insulated

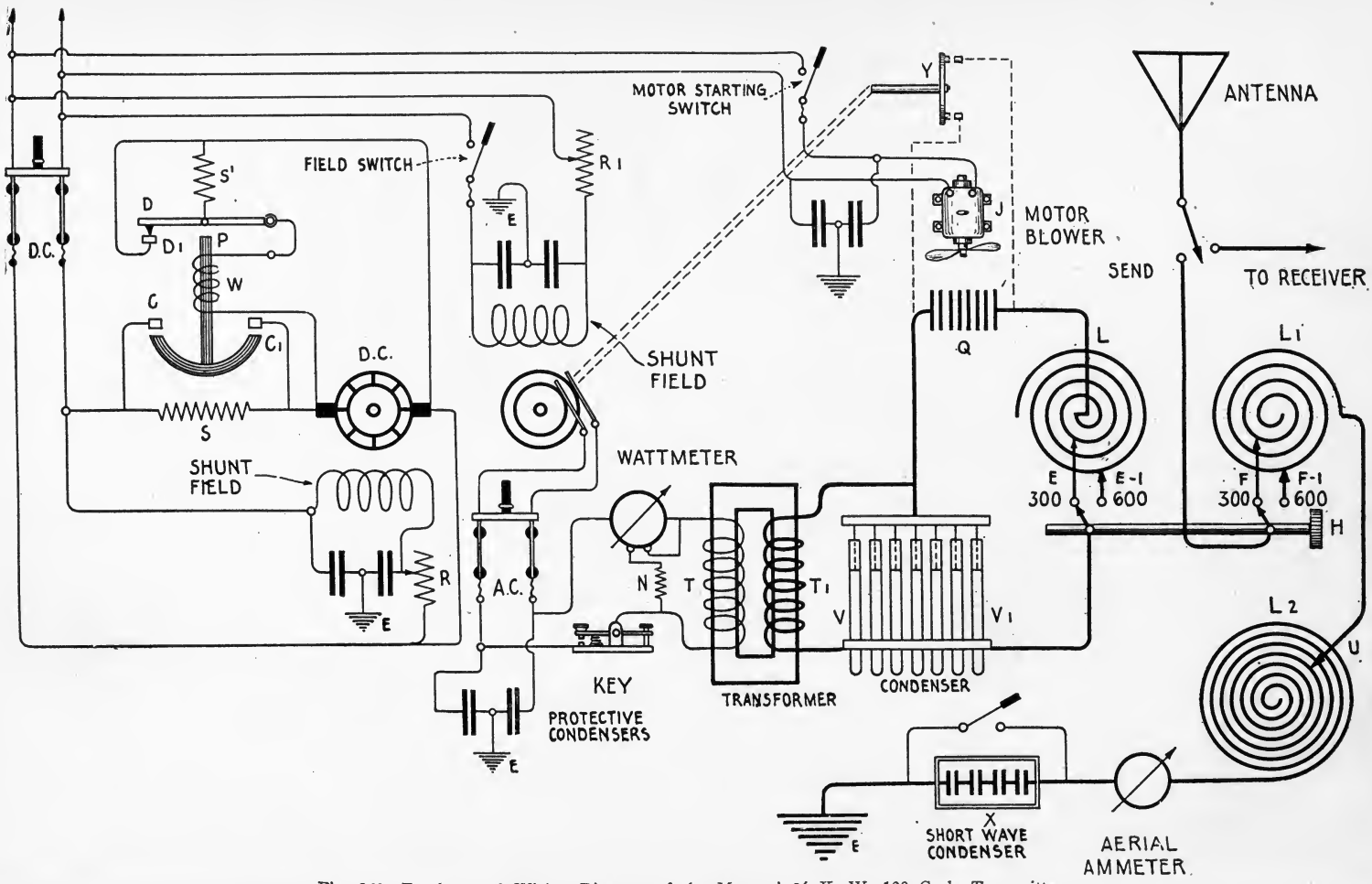

Fig. 263—Fundamental Wiring Diagram of the Marconi ½ K. W. 120 Cycle Transmitter.

by corrugated porcelain insulators. Each jar has capacity of .002 mfds., consequently the four in series have capacity of .0005 mfds.

The remainder of the equipment consists of a *Type* 106 *Tuner, head telephone, Type I aerial change-over switch,* and the necessary *aerial equipment.*

195. Installation.—The component parts of the closed oscillation circuit being mounted separately, short connecting leads must be employed to connect up the condenser, oscillation transformer and spark gap. Otherwise, it will be difficult to secure the wave-length of 300 meters. Perhaps the best arrangement of the apparatus is that shown in Fig. 262, where the transmitting apparatus is installed in a *silence cabin,* the operating room having the receiving tuner, the motor starter, rheostats, the transmitting key and the aerial change-over switch.

In the transmitting cabin, the rotary gap is mounted atop the high potential transformer; the oscillation transformer and condenser on the table immediately above.

The motor starter should be installed where it is convenient to the left hand of the operator.

Lead-covered cable is used to connect up the power circuits, No. 10 S. B. R. C. being used for the circuits carrying heavy current, and No. 14 S. B. R. C. for the field circuits and rotary-gap motor. Copper tubing is generally used for the radio-frequent circuits and copper ribbon for the earth wire. The receiving tuner is connected to the aerial switch by No. 18 fixture wire.

196. Adjustment of the 1 K. W. Set.—(a) *Regulation of Voltage and Frequency.* Care should be exercised not to overload this set by the use of abnormal voltages at the generator. These machines are constructed so that when 110 volts D. C. is supplied to the motor 110 volts A. C. is supplied by the generator. The contact on the generator field rheostat should occupy an approximate midway position for the correct voltage while the motor rheostat should be set at the zero position; e. g., all resistance cut out of the circuit (when the voltage of the ship's generator is normal).

(*b*) *Rotary Gap.* The *arm of the rotary gap* should be driven at approximately 2,400 R. P. M., but should be regulated according to the pitch of the note; in other words, the speed giving the clearest note is the one to use. A small speed controlling *rheostat* is mounted in the instrument room convenient to the operator. The adjustor should work in the direction of obtaining a note of high pitch with low values of voltage at the generator rather than with excessively high voltages. The gap between the points of the rotor and those on the stationary arm should be adjusted to a minimum length.

(*c*) *Tuning.* The *tuning* of this set is accomplished by first tuning the closed circuit to one of the standard waves with a wavemeter, followed by a similar adjustment of the aerial circuit. The better method is to excite the antenna with a spark coil or vibrating buzzer and in this manner measure the natural wave length of the aerial, then add turns at the aerial tuning inductance until the wave-length of 600 meters is obtained. Proceed similarly for 300 meters, but the short wave condenser must be connected in series with the aerial and perhaps another selection of turns made at the aerial tuning inductance.

The degree of coupling and the consequent purity of the radiated wave may be adjusted by raising or lowering the secondary winding in respect to the primary winding, on the vertical rod or post. The secondary winding may be clamped permanently at the correct position of coupling.

(d) The type 106 *receiving tuner* circuits and adjustment are completely covered in paragraph 138, Part IX.

(*e*) *Tuned Coil Emergency Transmitter.* The student should note that the diagram, Fig. 261, contains the complete circuits of the *Marconi tuned coil emergency transmitter.* The diagram includes the wiring of the induction coil and the charging panel.

When the left hand, two blade switch on the charging panel is closed, the main D. C. line to the batteries is closed, but current will not flow through the batteries until the *plunger of the underload circuit breaker is pushed up by hand.* If there are no loose connections in the charging circuit, the plunger will remain in this position until the charging current is cut off or until the voltage of the generator drops below that of the batteries (note position of these switches in Fig. 205a, Chapter 10).

In order to take readings of the battery voltage, a small strap key placed alongside the underload circuit breaker must be closed.

When the right hand double pole double throw switch is thrown to the upper set of contacts, the *transmitting key is connected in series with the power transmitting set, but if thrown in the opposite position the key is in series with the primary circuit of the induction coil.*

To place the coil transmitter into operation, the flexible plug contact attached to B should be removed from A and connected into C.

The arm of the rotary gap should be stopped in such position that a gap of the correct length is provided for the induction coil.

The student should also trace out (in this diagram) the circuit of the rotary-gap motor which includes the two-blade starting switch and the series rheostat. In practice the rheostat is adjusted until a clear musical tone is obtained at the gap.

The motor starter shown in this diagram is the standard General Electric Company's hand starter, the circuits of which are fully shown in Fig. 72.

197. Type "E-2" One-Half Kilowatt, 120 Cycle Panel Transmitter.—A number of vessels in the American Marconi service are equipped with ½ k. w., 120 cycle panel transmitters fitted with a quenched gap but unlike the type "P-4" and type "P-5," this set is designed for the two standard wavelengths only, namely, 300 and 600 meters. For emergency use, a rotary spark gap is mounted on the end of the motor generator shaft, which may be used in place of the quenched gap whenever required. A complete circuit diagram of the type E-2 set appears in Fig. 263, a front view in Fig. 264 and rear views in Figs. 265 and 266.

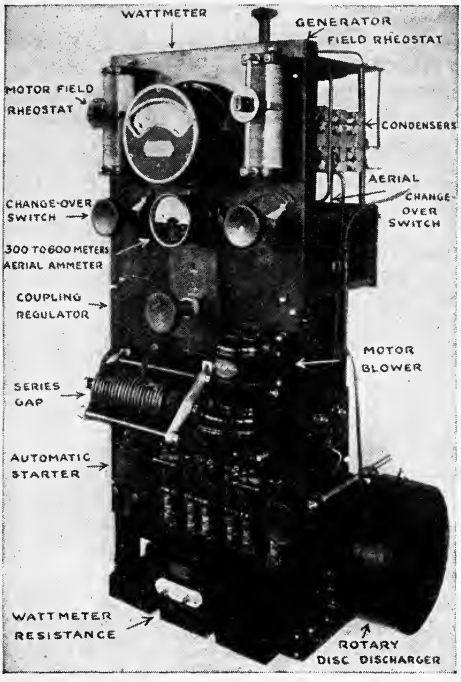

Fig. 264—Front View of the Marconi ½ K. W. 120 Cycle Transmitter.

A number of spare parts, such as an extra motor generator armature, motor blower armature, quenched gap plates, condenser jars, etc., are supplied, positively insuring against all possibility of breakdown.

198. Details of the Circuits and Apparatus.—Explanation of the detailed wiring diagram shown in Fig. 263 follows:

The *motor generator* is of the Eck type, having a two pole shunt wound motor and a simple shunt field winding for the generator. The speed of the motor is regulated by the sliding contact rheostat R and the voltage of the generator altered by the rheostat R-1. The generator field circuit may be broken by the small switch shown in the drawing. The receiving apparatus is thus protected from "humming" noises due to induction from the A. C. generator circuit.

The *motor starter* is the Cutler-Hammer single step type and is constructed somewhat differently than the types employed in the 2 K. W. and ½ K. W. 500 cycle panel transmitters. When the main D. C. line switch is closed, the resistance coil S is connected in series with the D. C. armature. Owing to the almost complete absence of counter electromotive force, the potential difference across the terminals of the armature at the start of the motor is low; hence insufficient current flows through the solenoid windings W_1 to draw up the plunger P. As the speed of the armature increases, the counter electromotive force rises, and accordingly the difference of potential increases; finally sufficient current flows through the solenoid W to draw up the plunger P, whereupon the contacts C and C-1 are short-circuited, shunting the resistance coil S out of the circuit. The motor is now connected directly to the D. C. line.

The plunger P also separates the *contacts D and D*-1 connecting *the resistance coil S*-1 in series with the winding W to protect the latter from overheating or burning out.

The *transformer* of the closed core type is denoted by the primary winding T and the secondary winding T-1. Just previous to pressing the key, the voltage of the generator is about 300 volts, but immediately drops to approximately 110 volts when the primary circuit of the transformer is closed. The secondary voltage of the transformer with the condensers in shunt is about 14,700 volts. A safety discharge gap is connected to the secondary winding terminals for the protection of the condensers and transformer in case one of the leads from the regular discharge gap should become disconnected.

The *wattmeter* of the ordinary switchboard type—range 0-750 watts—is connected in the circuit from the alternator to the transformer primary. The resistance coil N placed in series with the potential coil of the meter is mounted at the front base of the switchboard.

The *condensers* are of the tubular Leyden jar type plated inside and outside with copper. The average capacity of each jar is .0015 mfd. The actual value is accurately measured and marked directly on the glass of each jar. In case of puncture a condenser jar of like capacity must be substituted. The seven Leyden jars connected in parallel give a total capacity of about .011 mfd. The inside and outside terminals of the condensers are connected directly to the secondary winding of the transformer.

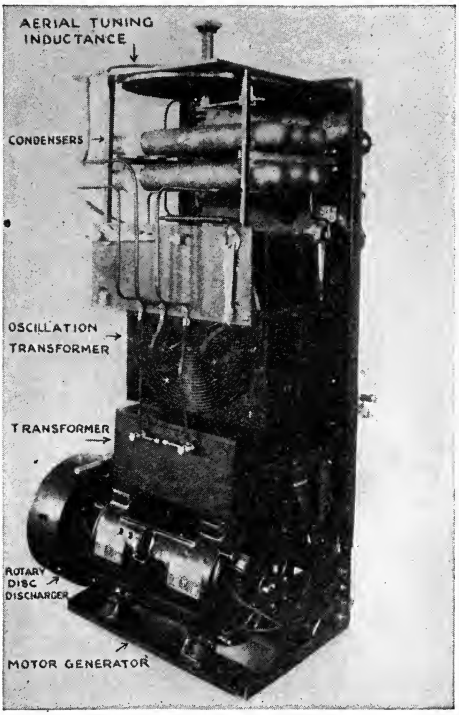

Fig. 265—Rear View of the Marconi ½ K. W. 120 Cycle Transmitter.

The *oscillation transformer* consists of a primary and secondary winding of the pancake type, which are indicated at L and L-1 respectively. Each winding consists of a single coil of copper ribbon properly mounted and spaced on an insulated base.

The secondary winding L-1, mounted on a movable base, permits the coupling between it and the primary winding L to be quickly and easily adjusted.

The *wave-length changing switch,* operated by the handle H, has two single blade contacts which when thrown to the right simultaneously connect such values of inductance in the antenna circuit and closed oscillation circuit as to give each circuit a period corresponding to 600 meters. When thrown to the left both circuits are given a wave-length of 300 meters, provided the short-circuiting switch of the short wave condenser X is open.

The correct number of primary and secondary turns for the 300 and 600 meter waves are determined by means of a wavemeter and connection therefor made through the flexible connectors E and E-1. The taps on the secondary inductance are located in the same manner. Two values of inductance for the standard wave lengths are selected through the flexible conductors F and F-1.

The *spark discharger* is of the multiple plate series type (quenched gap), consisting of fifteen plates giving fourteen gaps. No more than eight of these are generally required, leaving a number of spares. The discharge plates are of copper carefully ground, presenting an absolutely smooth and uniform sparking surface. The plates are separated by specially treated fibre washers. Cooling is effected by means of a small direct current blower J. The motor circuit includes a switch for starting and stopping purposes.

The *synchronous rotary gap discharger Y* is mounted on the end of the motor generator shaft. The rotating member has six discharge electrodes, while the stationary electrodes are two in number. The stationary electrodes may be shifted through a small arc, thereby permitting a spark discharge for each alternation of the charging current. This produces a discharge of uniform pitch having a musical characteristic. The group frequency of this set is 240 sparks per second.

The *aerial tuning inductance* of the continuously variable type, represented at L-2, is connected in series with the earth lead and consists of a single spiral of copper ribbon having a sliding contact U which allows connection to be made at any point on the spiral.

The *aerial changeover switch* for shifting the antenna from the sending to the receiving apparatus consists of a single blade double throw switch. When thrown to the right, the antenna is connected directly to the terminals of the receiving tuner; when thrown to the left, connection is made direct to the secondary winding of the transmitting oscillation transformer. These sets may be supplied with the type S, S, H, or I aerial changeover switch as well.

The *aerial ammeter* of the Roller-Smith type, having a range of zero to 10 amperes, is permanently connected in the aerial circuit and is used for obtaining the maximum value of current and to indicate conditions of resonance between the open and closed oscillation circuits.

The *short wave condenser* is of the standard Marconi type and may consist of either four flat plates of glass connected in series or four Leyden jars connected in series, giving a resultant capacity of .0005 mfd.

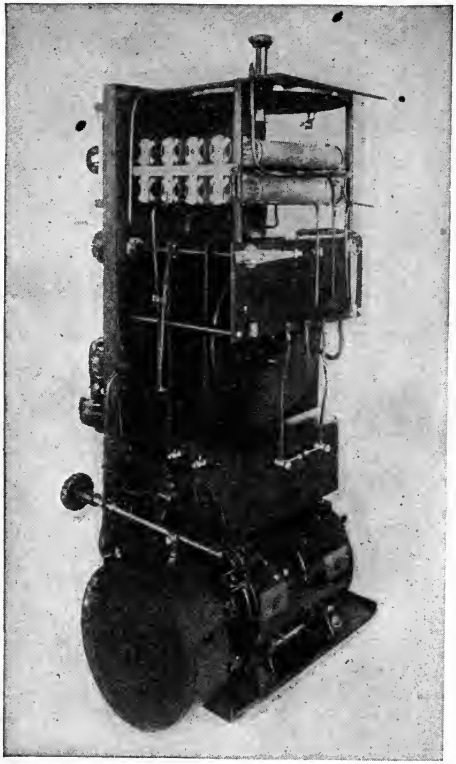

Fig. 266—Rear View of the Marconi ½ K. W. 120 Cycle Transmitter.

The low potential power circuits are protected from electrostatic induction by *protective condensers* of large capacity. Two of these condensers are connected in series and earthed at the middle point. These protective units are connected across the generator field windings, the motor field windings, the armature of the blower motor and the alternating current armature. The frame of the motor generator is connected directly to earth.

199. General Instructions for Tuning and Adjusting.—The following general instructions should be carefully observed by inspectors and operators:

(*a*) *Regulation of Voltage and Frequency.* Connect the D. C. line (110-120 volts) to the lower terminal of the fused switch marked "D. C. Line," the aerial to the binding post marked "A" on the back of the antenna changeover switch and ground either one or both of the terminals of the iron frame which supports the panel.

The slider of the generator field rheostat should be placed near the lower end, the antenna switch turned to "Send" position and about eight or nine gaps of the quenched gap connected in the circuit.

Next observe that none of the leads between the double two-point wave length switch and the oscillation transformer are disconnected. Close the D. C. line switch which starts the motor generator through the automatic starter. Then close the "generator field" and the "blower motor" switch; finally close the "A. C. line" switch.

(*b*) *Tuning.* The complete set is now ready for tuning. Disconnect the antenna and tune the closed oscillatory circuit to the desired wave length by means of a wavemeter.

Set the two-point switch indicator at "300."

Adjust the tap leading from the front coil of the oscillation transformer to switch point marked "300" to the 300 meter wave length. Then turn the indicator to "600" and adjust the tap to the higher wave length.

Next connect the set with the antenna, tune the secondary or open circuit to the closed circuit and locate taps for each of the two standard wave lengths.

The coupling as well as the sliding contact which travels over the turns of the aerial tuning inductance, should be varied while locating the wave-length tap, to find the best posi-

tion of both the coupling and flexible connection. The circuits are in resonance when the aerial ammeter shows the highest possible reading.

With the average ship's acrial it is possible to locate the correct number of turns at the secondary winding of the oscillation transformer so that the radiated wave can be changed from 600 meters to 300 meters by simply throwing the changeover switch to the proper position. When this switch is in the 300 meter position, the short wave condenser which is placed in series with the earth lead must have its short-circuiting strap removed. Generally speaking, the aerial tuning inductance tap is placed at a fixed point for either the 600 meter or 300 meter wave.

(*c*) *Adjustment of the Spark Note.* Either a receiver or a wavemeter may be used to indicate the quality of the note. If the note is not clear vary the generator voltage, the number of gaps and the transformer coupling, until it is clear or has a pitch of about 240 sparks per

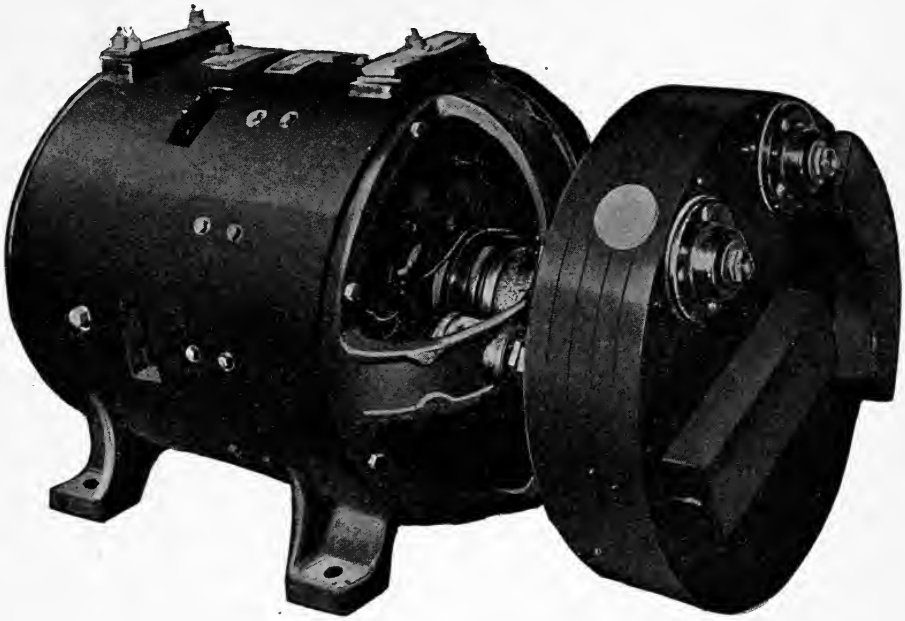

Fig. 266a—2 K. W. 240 Cycle Motor Generator With Synchronous Disc Discharger.

second. If the generator voltage is too high or too low, the note will either be rough or else have the wrong pitch. The note may also be judged by the tone of the brush discharge of the condensers.

Maximum antenna current does not indicate maximum efficiency. The note must also be kept clear and the gap not worked above the antenna current at which the clearness is not maintained.

The wattmeter should indicate about 500 watts and the number of gaps used should be between eight and twelve.

The power of the set varies in the square of the number of gaps; that is, if the ten gaps represent full power the power would be $10^2 = 100$.

The set is designed to carry a load of 500 watts. Any overload is liable to develop voltages that may break down the condensers or cause trouble elsewhere in the set.

(*d*) *Adjustment of the Quenched Gap.* The quenched gap should not be taken apart until absolutely necessary. When the circuits are in resonance, but the antenna current is less than 5 to 7 amperes or the wattmeter reading falls below its usual value, or when unable to get a clear note, the gaps should be opened and the spark surfaces examined.

If the gap becomes short-circuited it can be determined by the use of the "gap tester" (an insulated rod having a brass piece inserted in one end), which will indicate no spark when bridged across two adjacent spark discs.

To open the gap, loosen the set screw in the left hand of the gap with a wrench which is supplied with the set. Then lift out the plates.

If the plates and gaps stick together take care when forcing them apart not to injure the gasket or the sparking surfaces. Should the gasket become injured or cling to the metal, clean the plate off carefully and insert a new gasket.

The sparking surface of the plate should have a light, pink color with a somewhat dull finish. If a plate has a rough, black appearance, it indicates that the gap was not airtight and the sparking surfaces should be carefully cleaned with a very fine emery cloth.

Do not operate the set unless the blower motor of the gap is running, otherwise the heat may destroy the gaskets. Never touch any circuit which may be alive without first opening the field switch or the generator main switch, or possibly both.

200. Marconi 2 K. W. 240 Cycle Transmitter.—A number of vessels in the Marconi service are fitted with a 2 k. w. synchronous spark transmitter consisting of several isolated instruments mounted on an operating table in a convenient way.

The *motor generator* is a special Eck machine which takes current at the motor at 110 volts and generates current at 500 volts at frequency of 240 cycles. The motor is of the interpole type which gives sparkless commutation and constant speed regulation under variable load.

A *synchronous rotary spark discharger,* mounted on the generator shaft, consists of a fiber disc carrying twelve spark points connected together by a copper strip. The *stationary electrodes,* two in number, are mounted on a wooden muffling drum which encloses the disc. Synchronous discharges are obtained by shifting the drum carrying the stationary electrodes, one way or the other, until a uniform spark note is secured. Simultaneous adjustments of the generator voltage must be made noting the reading of the ammeter to insure that normal power consumption is not exceeded. The complete motor generator and spark gap is shown in Fig. 266a. The *condenser* may be either of the flat plate glass or copper-plated jar type. The oscillation transformer is the type mentioned in connection with the 1 k. w. 60 cycle sets and shown in the photograph, Fig. 119.

An *open core transformer* is employed taking current in the primary at 500 volts and delivering at the secondary, current at pressure of 15,000 volts.

The *receiving equipment* may consist either of type 107a or a type 106 tuner connected to a type I or type S. H. aerial changeover switch.

Either a *General Electric Company or Cutler-Hammer Hand Starter* may be supplied with the motor generator.

Since the process of tuning of radio sets has been gone over repeatedly in connection with other sets of the Marconi Company and particularly in paragraph 164, it is not deemed necessary to repeat the instructions again. *Briefly, the rotary gap is adjusted for a clear spark note after which the closed circuit is tuned to the standard wave by a wavemeter and the antenna circuit is adjusted to resonance by a hot wire ammeter or by the wavemeter if desired.*

201. Type P-9, ¼ K. W. Cargo Transmitting Set.—One of the latest types of transmitters developed by the Marconi Wireless Telegraph Company of America is the type P-9 set which was primarily intended for cargo vessels or ships of small tonnage.

Although the apparatus of this set is not placed on a panel board as the types P-4 and P-5, the component parts are mounted in a convenient way in an angle iron frame as shown in the photographs, Figs. 266-b and 266-c. Fig. 266-d is a complete wiring diagram of the set.

It is to be noted first that the lower part of the frame holds the *motor generator, the high voltage condenser* and a *step-up closed core transformer.*

On the upper shelf is placed the *oscillation transformer, the aerial tuning inductance, the short wave condenser, the lightning switch* and *a resonance indicator* for purposes of tuning.

A *hand-operated motor starter* is mounted to the side of the panel and immediately underneath a terminal board for making connections to the power mains, the aerial changeover switch and the telegraph key.

This set was designed with the utmost simplicity of construction and operation in view and is one that can be placed in unskilled hands without fear of breakdown.

Unlike the Marconi transmitters previously described, type P-9 is not fitted with a variable field resistance or an aerial ammeter. Fixed resistance coils are connected in series with both the motor and generator field windings and conditions of resonance between the

open and closed oscillation circuits are determined by a *small glow lamp* shunted by a semi-loop of wire. It is to be observed also that the coupling between the primary and secondary windings is changed by moving the primary at right angles to the secondary.

(*a*) *Description of the Set.* The motor generator is a ¼ K. W. 500 cycle machine of the Crocker-Wheeler type, the load voltage of the alternator being about 120 volts.

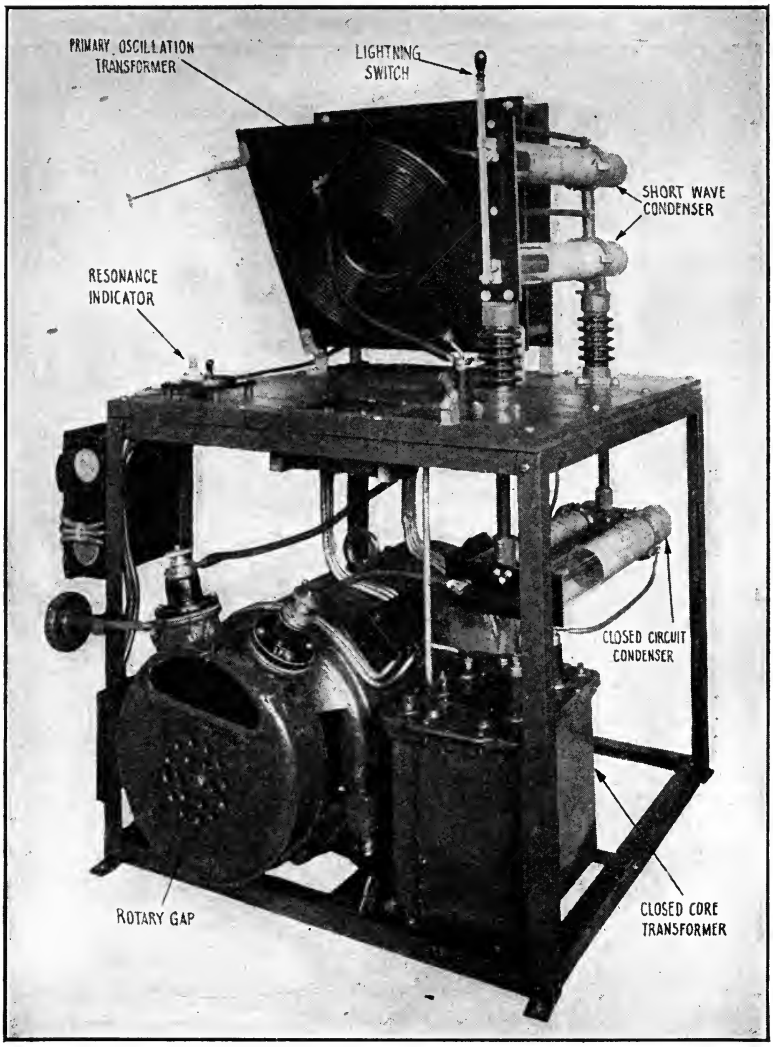

Fig. 266b—The Marconi ¼ K. W. Cargo Type Transmitting Set Complete.

The *motor* has a differential field winding for maintaining a constant speed under variable load and it is designed for connection to a 110 volt direct current circuit.

The *motor starter* is one of the Industrial Controller Company's hand-operated type with the usual connections to the motor. (See wiring diagram, Fig. 266-d.)

Protective ½ microfarad condensers are attached to the motor generator circuits to neutralize any differences of potential that may be set up by the transmitter. One terminal of these condensers is connected to a binding post of the machine and the other terminal to the frame of the motor generator, which, in turn, is thoroughly connected to earth.

The high voltage transformer is one of the closed core type (Fig. 266b), which is im-

mersed in a semi-liquid grease. A small fixed reactance coil is connected in series with the primary winding for regulation of the current.

The *high voltage condenser* consists of two small sized copper-plated jars of .001 microfarads each, which are shunted across the secondary terminals of the transformer.

The *oscillation transformer* has two flat spiral coils made of copper strip wound edgewise, the primary winding being connected in series with the spark gap circuit and the secondary winding in series with the antenna circuit. The correct number of turns in either winding

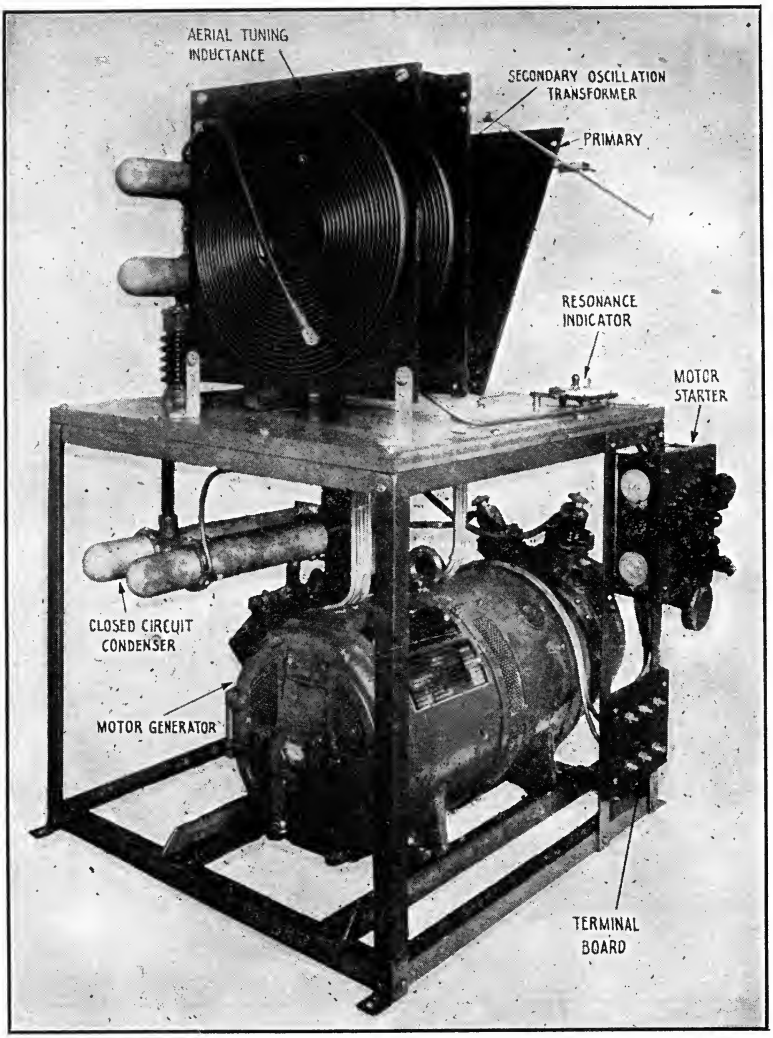

Fig. 266c—The Marconi ¼ K. W. Cargo Set showing the General Arrangement of the Apparatus.

for the standard waves is obtained by means of a small clip contact attached to a flexible lead. The positions of the 300, 450 and 600 meter waves at the primary winding are clearly marked and the contact clip must be shifted by hand for each change of wavelength.

The *aerial tuning inductance* also consists of a flat spiral copper strip wound edgewise on an insulating base, the inductance being varied by a flexible lead and contact clip.

Instead of an aerial ammeter, a *resonance indicator* is connected in series with the antenna circuit. It consists of a small glow lamp shunted by a loop of wire upon which bears a sliding contact. By regulating the length of the shunt circuit, the proportion of current flowing through the lamp can be carefully regulated.

The *short wave condenser* consists of two .001 microfarad condensers connected in series which are shunted out of the circuit by a knife blade switch. This switch also connects the aerial to earth for protection against lightning.

The type I aerial changeover switch furnished with this set is fully described in Paragraph 155. This switch in the transmitting position:

(1) Closes the alternating current circuit to the transformer;
(2) Closes the field circuit to the generator;
(3) Disconnects the aerial from the receiving tuner primary;
(4) Places the detector, head telephone and secondary of the receiving tuner on short circuit.

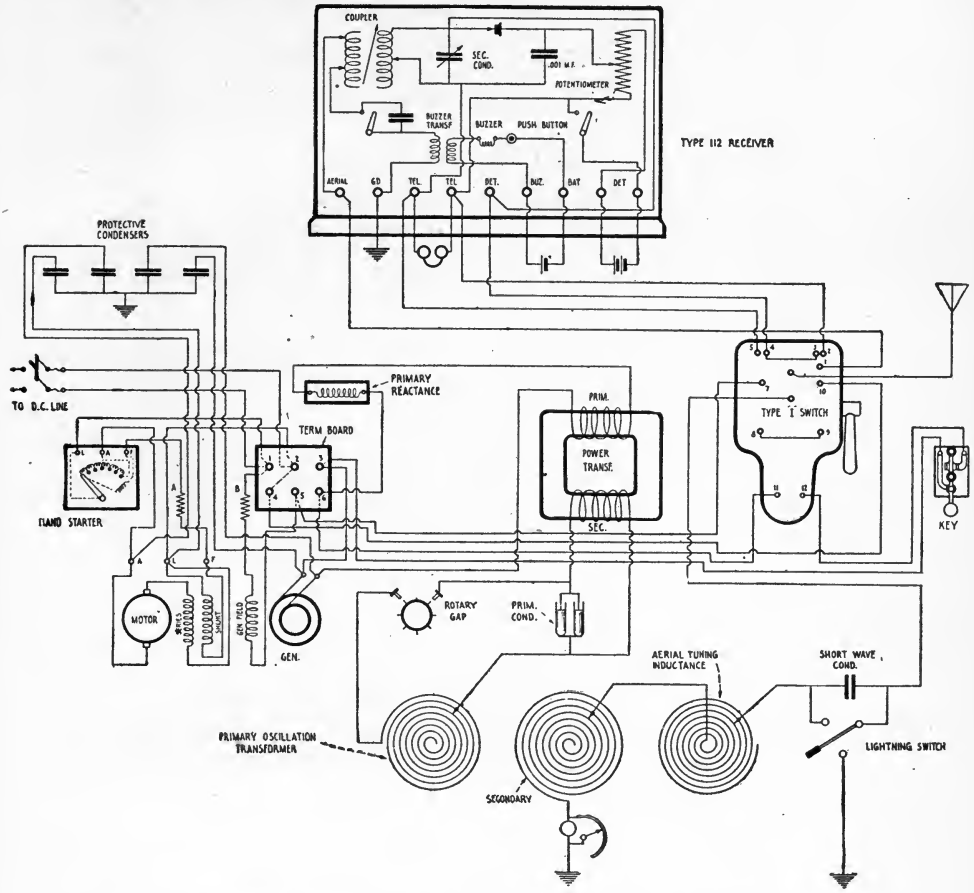

Fig. 266d—Complete Wiring Diagram of the ¼ K. W. Cargo Transmitting Set with Type 112 Receiving Tuner and Type I Aerial Changeover Switch.

In the receiving position the reverse operations are performed.

The remainder of the type P-9 equipment comprises a type C transmitting key, type 112 receiving tuner and a pair of 2,000 ohms D. H. receivers.

In addition, lead-covered wire, rubber-covered wire and copper tubing is supplied for connecting up the apparatus.

The type 112 receiving tuner is described in detail in Paragraph 156.

(*b*) *Installation.* The main D. C. line to the motor generator and hand starter is interrupted by a 30 ampere knife blade switch which is fused for 20 amperes. This is placed in a position convenient to the operator.

The blades of the switch are connected to studs No. 1 and No. 2 of the terminal board with No. 14 lead-covered wire. Stud No. 3 of the terminal board connects to one terminal

of the type C key; the other key terminal connects to terminal No. 12 of the type I switch.

Terminal No. 11 (type I switch) connects to stud 6 of the terminal board.

Stud No. 4 of the terminal board connects to terminal No. 10 of the type I switch.

Terminal No. 7 of the type I switch connects to stud No. 5 of the terminal board.

In order to conduct induced currents to earth, the lead coating of the wires is thoroughly connected to the earth wire.

The antenna lead-in insulator is connected to the type I switch contact marked "ANT C'K'T" by means of quarter-inch copper tubing.

The type I switch contact marked "OSC C'K'T" is connected to the switch blade terminal of the short wave condenser.

All other connections to the type I switch are firmly soldered in special lugs provided for the purpose. The copper tubing is supported by two standard lighthouse type of insulators supplied by the Marconi Company.

The ground stud on the frame work of the transmitting apparatus is connected to earth by a zinc strip one-half inch in width.

Terminal No. 1 of type I switch is connected to binding post marked "Aerial" or "ANT" on the receiving tuner.

The tuner binding post marked "Ground" or "GND" is connected directly to the earth.

The left telephone binding post is connected to the terminal No. 5 of the type I switch.

The right telephone binding post is connected to terminal No. 2.

On the type 112 receivers with serial numbers from 2 to 13 inclusive, the small binding post marked "Detector" (located beside the primary tap switch) is to be connected to terminal No. 4 of the type I switch; but on receiving tuners with serial numbers from 14 up, the binding post marked "Detector" or "DET" opposite the telephone binding post is to be connected to terminal No. 4 of the type I switch.

The three dry cells are connected to the battery binding posts on the receiver as shown in Fig. 266d. The receiving apparatus is connected with No. 18 rubber-covered solid wire.

(*c*) *Adjustment.* After the transmitting set is connected to the power mains, aerial switch, etc., the first adjustment is to be made at the electrodes of the rotary gap.

(1) **Lower the stationary electrodes by unscrewing the adjusting nut at the top (one at a time) until they touch the electrodes on the disc; then turn the adjusting screw to the right until the electrodes just clear those on the rotary disc, when the latter is turned over by hand. The proper separation is from .005 to .01 of an inch. Be sure that the engaging pin on the stationary electrode is properly seated.**

(2) **Next close the main D. C. line switch and start the motor generator by drawing the starting handle over slowly.**

(3) **Close transmitting key and shift the muffling drum carrying the stationary spark electrodes until the note is clear and musical.**

(*d*) *Tuning.* The set is tuned to the three standard waves as follows:

(1) **Set contact clip on the primary coil of the oscillation transformer at the desired wave length (the position of the tap for each of the three standard waves is plainly marked on the coil).**

(2) **To insure accuracy, check back the wave length of the closed oscillation circuit by a wavemeter.**

(3) **Set the primary coil of the oscillation transformer at an angle of about 50° to the secondary.**

(4) **Cut in 4 or 5 turns at the secondary winding.**

(5) **Add turns at the aerial tuning inductance until the resonance indicator glows brightly.**

(6) **If glow lamp becomes excessively incandescent, turn the small shunt switch counter clockwise.**

(7) **Continue changing the antenna inductance until the indicator shows a sharp maximum.**

(8) **Then draw the primary winding further away from the secondary and slightly retune the antenna circuit.**

(9) **The set generally will be properly tuned when a slight change in coupling or antenna inductance causes a decrease of the antenna current.**

(10) **If the coupling proves too close with the primary winding at right angles with the secondary, cut out turns in the secondary and add turns at the aerial tuning inductance until resonance is obtained.**

When connected to aerials having natural wave lengths between 250 and 300 meters, these sets will give antenna current of from 3 to 4 amperes, which will permit communication over several hundred miles.

202. Aerial Current and Reduction of Power.—In order to familiarize operators with the approximate values of aerial current to be expected from the different Marconi transmitters at the three standard waves, the following table is appended. Different values will be obtained with different aerials but those given may be considered as a good average:

Type of Transmitter.	300 meters.	450 meters.	600 meters.
2 K. W. 500 cycle	3 to 5 amperes	9 to 13 amperes	12 to 17 amperes
½ K. W. 500 cycle	2 to 4½ amperes	5 to 7 amperes	5½ to 8 amperes
1 K. W. 60 cycle	1½ to 3 amperes		5 to 7 amperes
½ K. W. 120 cycle	1½ to 3 amperes		5 to 7 amperes
2 K. W. 240 cycle	1½ to 3 amperes		5½ to 8 amperes
¼ K. W. 500 cycle	1 to 2 amperes		3 to 4 amperes

(*a*) *Reduction of Power.* The International Regulations require that the transmitter be constructed to permit the power to be reduced progressively from maximum to zero. The United States regulations permit the power to be reduced in certain types of sets by reduction of the coupling between the primary and secondary windings, which reduces the antenna current.

In the quenched gap sets, the power is reduced (1) *by cutting out the gaps,* (2) *by reduction of the generator voltage or* (3) *by lowering the coupling if necessary. The power of the synchronous spark sets is reduced by reduction of the coupling between the primary and secondary windings of the oscillation transformer* (*thereby reducing the antenna current*) *or by lowering the generator voltage.*

In order to secure a uniform spark discharge under reduced power, it may be necessary with synchronous spark sets to slightly readjust the position of the stationary electrodes.

Certain types of transmitting sets are provided with *primary or secondary reactance coils* which reduce the primary or secondary current to a minimum value, but there is an objection to reducing the power in this way because a total readjustment of the gap and secondary voltage is required for clear tones.

In sets like the Marconi 2 K. W. 240 cycle transmitter or the 1 K. W. 60 cycle transmitter, the antenna current is reduced by turning the secondary winding of the type A oscillation transformer at right angles to the primary winding or at any intermediate position. (See curve Fig. 245A).

203. General Instructions for the Panel Sets.—Operators in the Marconi service are urged to give careful attention to the following general instructions for the care and maintenance of the panel transmitters:

(1) Observe the oil containers of the generator and motor bearings frequently and keep them well supplied with oil. Open small petcock occasionally for test.

(2) Keep close watch on the spring contacts of the aerial changeover switch for looseness of contact.

(3) Wipe the insulating rods of the panel board frequently with a slightly oiled cloth to prevent the accumulation of dust or moisture.

(4) Make daily test of the reading of the aerial ammeter. Vary the inductance of the aerial tuning inductance slightly to compensate for varying sag of the wires.

(5) Make daily test of the auxiliary battery or auxiliary set. Keep batteries fully charged.

(6) Tighten up all nuts and bolts on the panel board frequently.

(7) Take up the adjusting nut on the quenched gap a fraction of a turn now and then.

(8) Keep brushes on the motor clean.

(9) Keep close watch on the dead-end switch spring contacts of the receiving tuner. Also keep metal sectors on the rubber rod and the brushes clean.
(10) If aerial ammeter burns out, disconnect it completely from the thermo couple. If necessary place a shunt around the heater terminals.
(11) If the resistance coils in series with the solenoid windings burn out, substitute two 16 C. P. lamps connected in parallel. Should the plunger on the automatic starter not rise when the starting switch is closed, raise it by hand and block it in position with a stick of wood, for temporary operation. At an opportune time examine the resistance coil in series with the solenoid winding.
(12) Oil bearings and gear wheels of wave length and coupling adjustment with a few drops of thin oil.
(13) In so far as possible protect set from moisture at all times. When sparking takes place at the safety gap, readjust rotary gap or use less plates at the quenched gap.
(14) Do not under any circumstances exceed the power rating of the set.
(15) For broad interfering wave use close coupling and full power input.

Although the circuits and description of the various parts of a complete panel transmitter when treated in detail may appear rather complicated to the beginner, he should bear in mind that these senders are entirely automatic in operation. In fact, during practical operation, in order to change the apparatus from a transmitting to a receiving position, the operator is only required to shift the position of the antenna changeover switch.

Moreover with the panel sets, the length of the radiated wave can be instantly changed from one to the other of the three standard waves (300, 450 and 600 meters) by merely throwing a switch.

One skilled in the knowledge of telegraphy could learn to manipulate a transmitter and receiver within a day's practice, but more detailed knowledge of the circuits is required on the part of the operator, in order that he may be able to cope with such troubles as may arise at sea.

PART XIII.

MARCONI DIRECTION FINDER OR WIRELESS COMPASS AND ITS APPLICATION.

204. In General. **205.** Description of Equipment. **206.** The Direction Finder Aerials. **207.** The Circuit Complete. **208.** The Tuned Buzzer Tester. **209.** How Current Is Induced in the Looped Aerials. **210.** Direction of Magnetic Forces Within the Goniometer. **211.** General Instructions for Operation of the Direction Finder. **212.** To Find the Direction of a Radio Station.

204. In General.—The radiogoniometer or *direction finder* is a specially designed receiving apparatus for determining the direction of a wireless telegraph transmitting station at a given receiving station. The device was primarily intended as an aid to navigation, enabling the officer of a vessel to make observations and establish his position independent of weather conditions, such as fog, etc. It is applicable in many other ways also and can be employed to advantage by armies and navies; by means of it a hostile wireless station may be definitely located, or the direction of the enemy's battleships while in radio communication, "sensed."

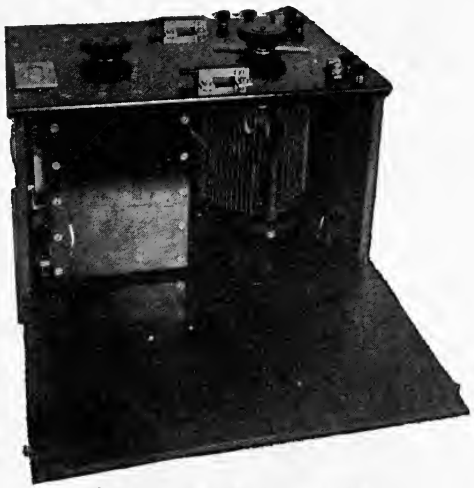

Fig. 267—The Radio Goniometer.

Government inspectors are likewise enabled to "round-up" interfering amateur stations by using the direction finder. The apparatus is even of considerable value for ordinary receiving purposes (short range work), for it allows the receiving operator, when the ether in a given locality is congested, to "screen out" unwanted wireless telegraph signals.

The Marconi direction finder is an adaptation of the apparatus originally evolved by Messrs. Bellini and Tosi; however, the device as produced by these inventors was not adapted to ship work. Improvements were made by the Marconi Company and equipment is now turned out in a form entirely satisfactory for use by navigators, giving, as it does, a high degree of accuracy.

205. Description of Equipment.—The complete equipment consists of a *goniometer* with the necessary appliances for control as in Fig. 267, a *tuned wireless telegraph receiver* shown in Fig. 268, a *tuned buzzer tester* as in Fig. 269, and *an angle divider* as in Fig. 270.

206. The Direction Finder Aerials.—A distinctive feature of the direction finder equipment is the use of two closed circuit looped aerials having the form of an isosceles triangle as shown in Fig. 271. These aerials bisect each other at right angles and also hold an angle of 45° with the bow and stern line of the vessel.

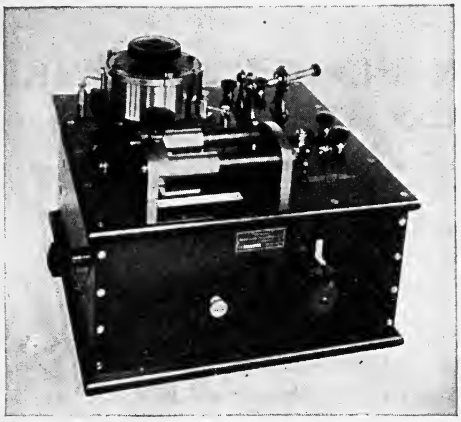

Fig. 268—The Tuned Receiver for the Direction Finder.

It is important that the aerials be placed in a somewhat clear space on the deck and that the two loops have identical dimensions. The wires should be held taut and firmly in place. The current collected by the aerials, from the advancing electromagnetic waves, is made to flow through a specially designed set of *excitation coils,* setting up a magnetic field which acts upon a third coil known as the *exploring coil.* The latter coil carries a pointer which moves over a 360° scale and gives the sense of direction of any transmitting station. This portion of the apparatus is known as the *goniometer,* the windings for which are clearly shown in the photograph, Fig. 272. It will be referred to again hereafter.

The sketch, Fig. 273, is a plan view of the two triangular aerials as previously described, showing their relative positions to the bow and stern line of a given vessel (marked B and S).

Before entering into a detailed explanation of the circuits, the diagram in Fig. 274 should have consideration. Let A and B represent two sides of a single loop of the direction finder aerial, and the arrows, the direction of the flux in a passing wireless wave; then, this loop receives the maximum induction when its plane bears the position, to the passing wave, shown. Furthermore, a little study of the diagram will show that the current set up by this flux in side A, is in opposition to that set up in side B; but if the two sides of the loop are spaced a certain distance apart, the current induced in side B will attain maximum amplitude an instant later than in side A; hence, an electric current, the result of the two E. M. F.'s flows around the loop A, B. The magnetic flux generated thereby, in the coil L, acts inductively upon the exploring coil L-2 the resulting oscillations being rectified by the detector and associated apparatus, and made audible in head telephones in the usual manner.

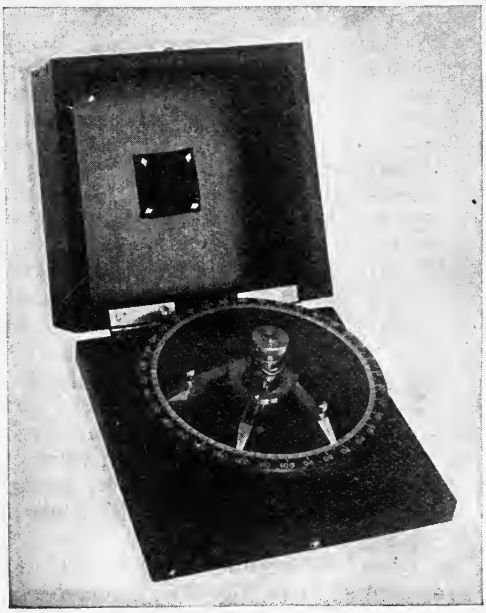

Fig. 270—Angle Divider.

It is plainly evident that both sides

Fig. 269—Tuned Buzzer Tester.

of the loop A, B, are acted upon equally and at the same instant when its plane is at a right angle to the plane of the advancing wave. Equal and opposing *electromotive forces* will, therefore, be induced in both legs, resulting in no flow of current.

If, however, the loop A, B, is acted upon at any other angle than a right angle, an electromotive force will be induced, the intensity of which varies as the cosine of the angle which the advancing flux makes with the loop.

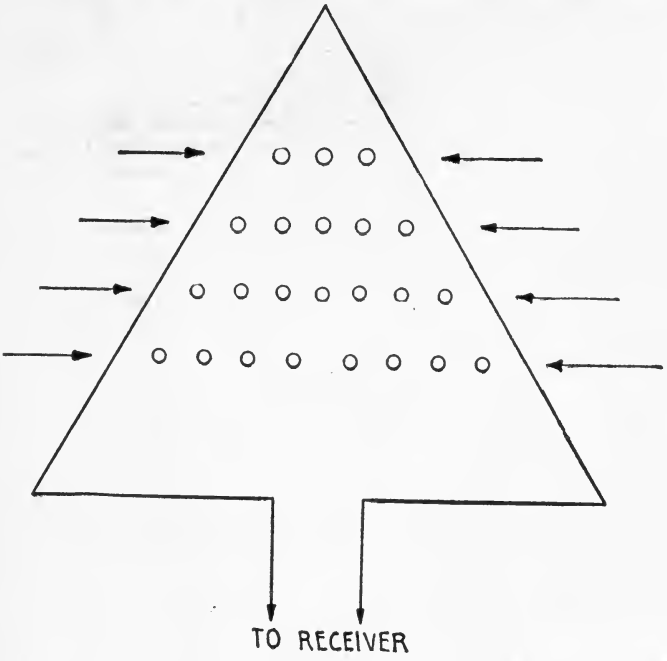

Fig. 271—The Triangular Aerial Employed in Connection With the Direction Finder.

The description just given does not take into account the phenomena involved when both loops are employed and the consequent effect on the goniometer coil. This will be explained in a later paragraph. We shall first proceed to a description of the direction finder complete.

207. The Circuit Complete. — Careful inspection should be made of the diagram of connections in Fig. 275. The triangular loop aerial, A, B, is connected in series with the variable condenser K and to the excitation coil L. The loop aerial C, D, is connected in series with condenser K-1 and the excitation coil L-1. The condensers K and K-1 have identical values of capacity and their capacities are altered simultaneously by a handle mounted on the top of the box as shown in Fig. 267.

Fig. 272—Detail of the Radio Goniometer.

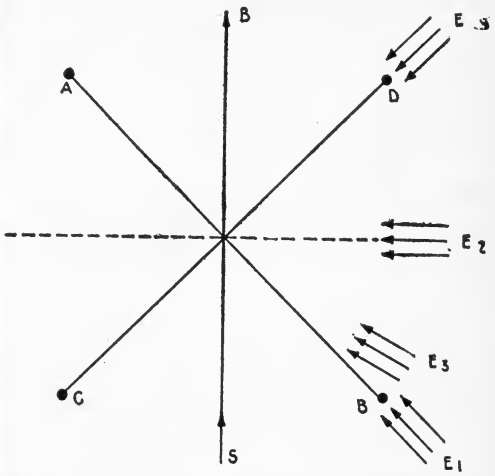

Fig. 273—Diagram Showing the General Layout of the Direction Finder Aerials.

The magnetic field produced by the coils L and L-1 combine and act upon the exploring coil L-2, the position of which will be more clearly understood from the photograph, Fig. 272, which also shows the rectangular coils to be connected to the loops of the aerial. *The exploring coil is placed inside the antenna coils and is turned by the handle on the top of the set.* The oscillations induced in L-2 by the oscillatory current flowing in the coils L and L-1 is transferred to the inductance coil of the local detector circuit L-4 by the coil L-3.

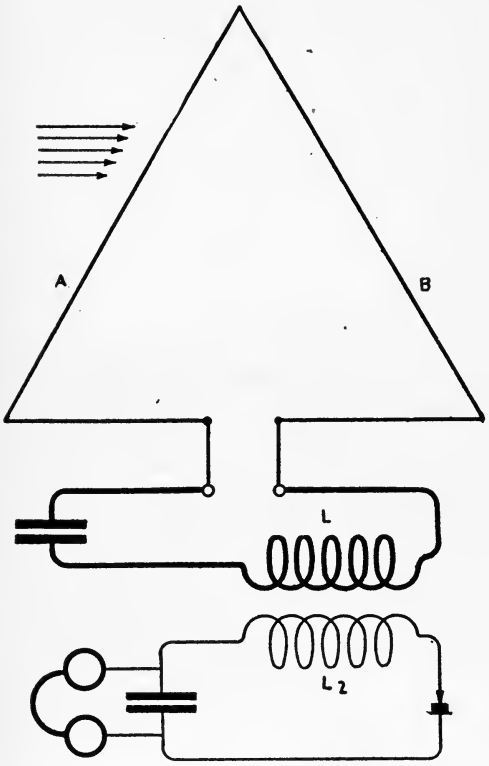

Fig. 274—Receiver Connected to a Single Loop Aerial.

The coil L-2, the variable condenser V, and the coil L-3, constitute an intermediate circuit similar to that employed in the well-known Marconi valve tuner. The coupling between the coils L-3 and L-4 is varied by a knob mounted on the side of the tuned receiver.

The *detector circuit* consists of the inductance coil (of fixed value) L-4; the billi-condenser V-1 in shunt; the fixed condenser and the head telephones H; the potentiometer P and the battery B. Two detectors are employed for this set; one a crystal of carborundum, the other a crystal of cerusite; either one of which may be connected in the circuit as desired. When the cerusite detector is in use, the battery and potentiometer are cut out of the circuit.

208. The Tuned Buzzer Tester.—The direction finder equipment also includes a *tuned buzzer tester* which may be set to radiate waves either 300 or 600 meters in length. The buzzer box has four holes, one in each corner, through which the four leads from the two looped aerials pass. *These holes are marked S F (Starboard Forward), S A (Starboard Aft), P A (Port Aft) and P F (Port Forward). Care should be taken to bring the corresponding leads from the loop aerials through the proper holes.* The leads for both aerials are now in inductive relation to the tuned buzzer circuit; hence, the aerials and in fact the entire apparatus may be preadjusted to the two standard wave lengths, assuring that a sender transmitting on one of these waves will be heard.

It is sufficient for the time being to say that for the practical operation of the apparatus, *the aerial circuit, the intermediate circuit, and the local detector circuit must be accurately tuned to resonance and to the incoming waves. The exploring coil is then turned on its axis until the maximum strength of signals is secured in the head telephones. The pointer attached to the coil L-2 will then lie in the direction of the transmitting station.*

We shall now explain the induction of current in the two looped aerials by an advancing electromagnetic wave.

209. How Current is Induced in the Looped Aerials.—If the waves from a given transmitting station, Fig. 273, advance in the general direction E, oscillating currents will be induced in the loop C, D, but none in loop A, B. To obtain the maximum induction from these oscillations, the exploring coil must, in this case, lie parallel to the goniometer excitation winding connected to the terminals of the loop C, D.

Again, if the waves advance in the direction E-1, the induction on the loop A, B is maximum and on C, D nil. Hence, the exploring coil must now lie parallel to the goniometer winding connected to the loop A, B to receive the maximum induction, and the pointer will lie along the direction E-1.

If the waves advance in the direction E-2, both loops are acted upon simultaneously and

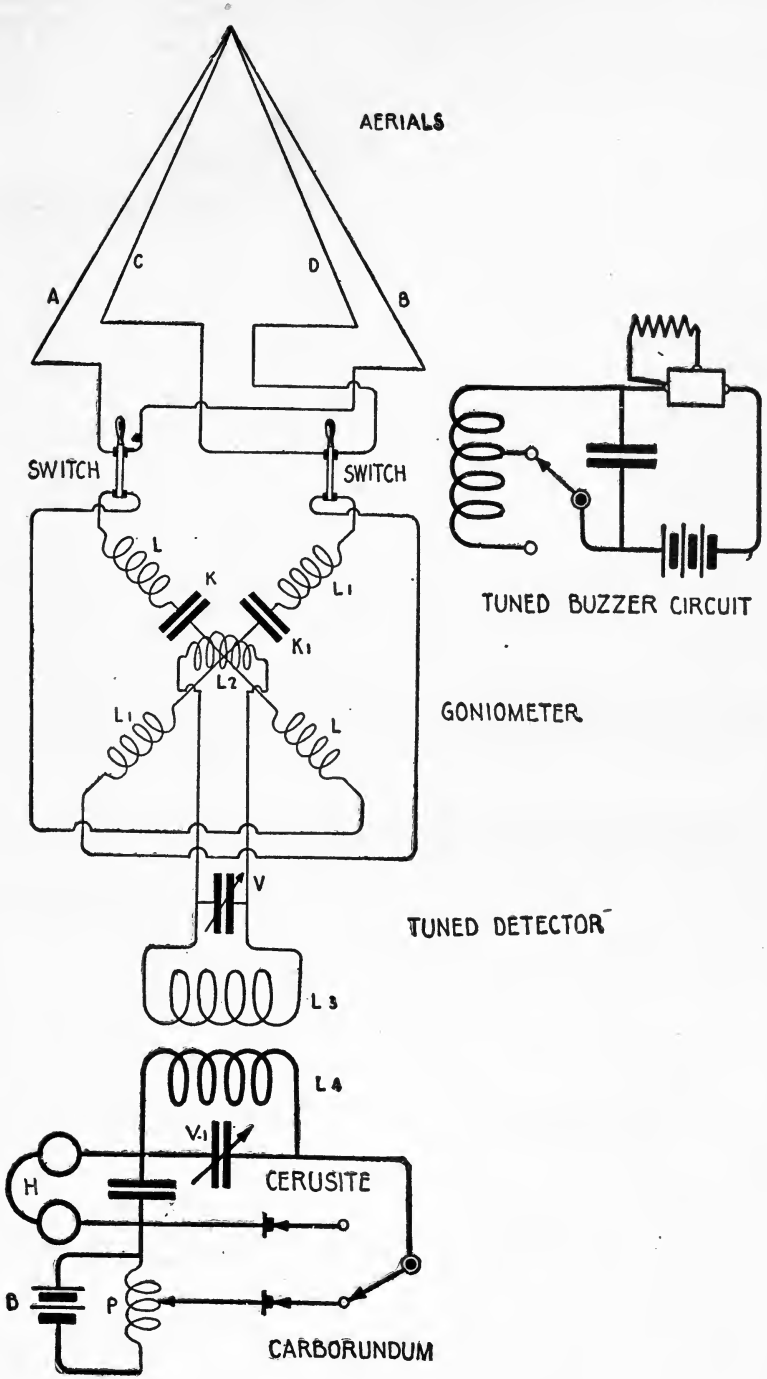

Fig. 275—Complete Wiring Diagram of the Marconi Direction Finder.

equally, and an oscillatory current flows through both excitation windings of the goniometer. The magnetic fields set up by the two coils combine and produce a resultant field from which the maximum induction will be obtained in the detector circuit, when the pointer of the exploring coil lies parallel to a line drawn midway between C and D, A and B (dotted line).

But let the waves arrive in the direction E-3; in this case the loop A, B will receive the maximum induction of the advancing wave while the loop C, D will be acted upon feebly. To obtain the maximum induction from the resulting magnetic field, the goniometer coil will be in such position that the pointer will lie along the direction E-3.

210. Direction of Magnetic Forces Within the Goniometer.—Fig. 277 outlines the production of the magnetic field within the goniometer when both aerials are acted upon by the advancing wave simultaneously. It should be remembered that in order to induce the maximum current in the detector circuit, the exploring coil is always at right angles to the magnetic field within the goniometer windings. This is shown in the diagram, Fig. 276, which is in fact a *plan view* looking down from the top on a single coil connected to one of the loop aerials. The direction of the magnetic lines of force with a given direction of current and the corresponding position of the exploring coil for maximum induction is clearly mapped out as well as the position of the pointer on the scale and its mounting relative to the coils.

Fig. 277 is a *plan view* looking down from the top on the two coils of the goniometer showing, by the dotted lines, the resultant magnetic field when both aerials are acted upon simultaneously and with equal intensity. If current flows in the coil A, B only and in the direction shown, the corresponding magnetic lines of force will take the general direction of the inside loops (the N and S polarity being as indicated). And again, if only the loop C, D is acted upon by the advancing waves, then the general direction of flux in the corresponding goniometer coil will be that shown. *But when current flows in both coils at the same time, it is clearly seen that the corresponding fluxes are at right angles and a resultant field is produced which will take the paths F and F-1 and the pointer on the coil, for maximum induction, will lie in the direction P and P-1.* The exploring coil must, therefore, be in the position shown to receive the maximum induction from the resultant magnetic field.

211. General Instructions for Operation of the Direction Finder.—(1) As a matter of convenience, the box containing the goniometer coils and the variable condenser, should be so placed that the zero position on the scale coincides with the bow and stern line of the vessel.

(2) The tuned buzzer circuit is then set into operation at either 300 or 600 meters, depending upon which wave-length it is desired to receive.

(3) The coupling knob on the tuned receiver is turned to 90°.

(4) With the buzzer in operation, the condenser connected across the intermediate circuit and the billi-condenser are altered in capacity (simultaneously adjusting the detector) until maximum response is secured in the head telephones.

(5) When the foregoing adjustments have been made, the capacity of the condenser in the antenna circuit is altered by the knob on the top of the goniometer box until a still greater response in the head telephones is obtained. It may then become necessary to slightly readjust the values of capacity in use at the intermediate circuit condenser and the billi-condenser.

(6) When the two loop aerials are in use and the buzzer is in operation, the loudest signals are obtained from the buzzer when the pointer is at zero. The signals should gradually decrease in strength as the pointer is moved toward the 90° position.

(7) When the two aerials are in use, zero signals should be obtained when the pointer is in the position 90°-90°.

(8) When one of the aerial loops is disconnected by means of the switch on the top of the goniometer box, the maximum signal is received with the pointer at 45°-135° in one direction and the zero signal with the pointer 45°-135° in the opposite direction. The reverse condition takes place when the second loop is in use alone.

(9) If, when the loops are thus tested singly, it becomes necessary to alter the capacity of the intermediate or the billi-condenser for maximum response, it is a positive indication that the loops are unsymmetrical and therefore out of balance. Identical positions of condenser capacity should be obtained on both loops. Steps should be taken immediately to

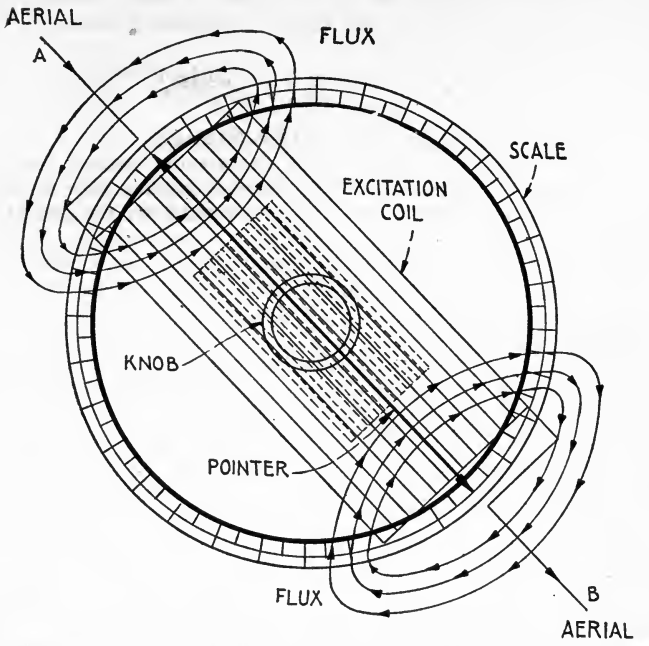

Fig. 276—Showing the Magnetic Flux Within a Single Coil of the Goniometer Under Given Conditions.

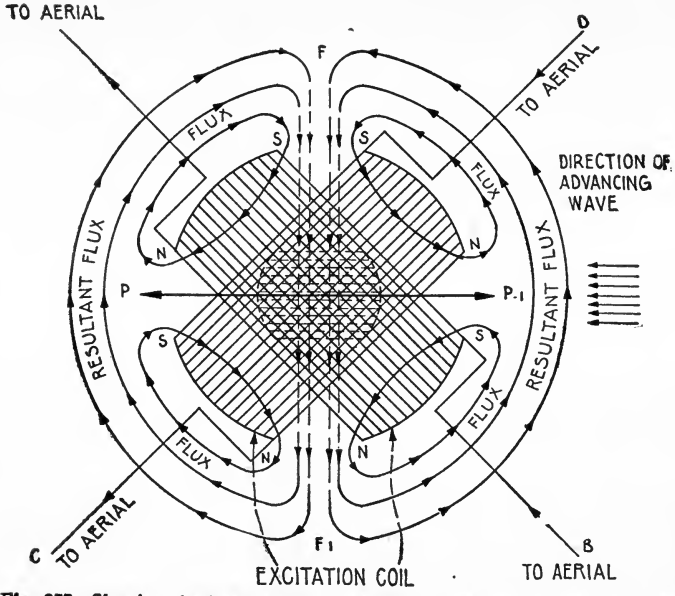

Fig. 277—Showing the Resultant Flux Set Up in the Two Excitation Coils of the Goniometer.

correct this error which undoubtedly lies in the aerial. A slight compensation for this unsymmetrical condition may be made at the variable condensers inside the box by means of two small adjusting screws.

(10) The strength of the signals in one loop should be identical with that in the other. If not, a bad connection probably exists in one of the aerials.

212. To Find the Directions of a Radio Station.—(1) The station whose direction is to be determined if not already in the act of sending, should be called and requested to send a test letter for two or three minutes, making sure to disconnect the two looped aerials of the direction finder by switches mounted on the top of the goniometer box during the sending period.

(2) When a reply is received (on the ordinary receiving equipment), the ship's transmitter and receiver are put out of action, even to the disconnecting of the flat top aerial from the earth, which, if left in the circuit, will seriously affect the accuracy of the goniometer reading.

(3) Next close the two switches for the loop aerials and swing the direction finder handle until the maximum strength of signals is obtained in the head telephone. This should not be a difficult adjustment, as the apparatus has previously been adjusted to the maximum degree of sensitiveness and to the standard wave length adjustment by means of the test buzzer. The pointer will now indicate on the goniometer scale the general direction of the transmitting station from which signals are being received, that is to say, it shows the direction with respect to the bow and stern line of the vessel.

(4) If the signals received are not sharply defined, having about equal strength over a considerable portion of the goniometer scale, the positions should be noted where the *signals fall to zero* (above and below maximum) and a mean of the two readings taken. The mean reading is obtained by the angle divider furnished with the set.

(5) Before transmission is again resumed, care should be taken to disconnect the two loop aerials from the goniometer by means of the switches previously described, and also to put the detector switch at zero.

It should be understood that the direction finder only gives the sense of direction in reference to the bow and stern line of a vessel and not the geographical direction of the wireless station, which, of course, must be obtained by the readings of the standard ship's compass. More clearly, the direction finder gives the angle which the advancing wave from the transmitting station makes with the center line of the vessel.

For instance, if the pointer of the direction finder indicates that the general direction of the transmitting station is 20° off the port bow, it does not show whether that station is 20° to the port bow or 20° to the starboard quarter. In the case of land stations there need be no doubt concerning this, as it is generally known whether the station is to the port or starboard side of the vessel. There can never be much doubt as to whether a ship is approaching or receding from a land station, for by the reverse interpretation, the land station would be located at sea—an obvious absurdity.

If, in case of a heavy fog, the signals from another ship indicated that it bore a direction over the bow and stern line of the vessel, and the signals from the ship became of gradually increasing intensity, it, of course, indicates that the ships are approaching each other, but does not show whether bow-on, or in the same general direction. A wireless message sent to the ship asking her course, would of course, remove all doubt and enable the navigator to avoid a collision.

Readings may be taken simultaneously of two land stations, and the position of the vessel located by well known navigation methods. Readings may be taken from a single station and the ship moved forward in a straight course to a definite distance and a second observation made. The data obtained in this manner is sufficient to establish the position of the vessel.

An interesting application of the direction finder is the assistance it gives in locating a distressed vessel in foggy weather or after darkness. After the distress signals have been received, the position of the distressed vessel transmitted and certain information given to the relief vessel to enable the commander to know what direction he shall take, the distressed vessel is then asked to make the test letter "V", or any other prearranged signal. The direction finder of the relief vessel is then put into operation and the general direction of the signals of the distressed vessel obtained.

The relief vessel is then swung by the helm until the bow and stern line of the vessel coincide with the position of the pointer on the direction finder where maximum signals are obtained. In this manner, the relief vessel can be kept on a direct course and the distressed vessel located in the quickest possible manner.

When entering ports like New York harbor, where the atmosphere is at times congested with wireless traffic, the direction finder has been employed in a most efficient manner for eliminating unwanted signals. First one loop is thrown in the circuit; if the station desired is not heard, the second loop is thrown in and a test made. If the signals are received on this loop, 50 per cent. of the local interference under some conditions may be wholly eliminated, or at least detuned to such an extent as to be negligible. Or, if desired, both loops of the direction finder may be employed, and the pointer of the goniometer set in the direction of the station from which signals are being received. It is certain that in this direction the maximum strength of signals will be received, and those of all other stations not on the same general line will be reduced or wholly excluded.

Under favorable conditions, bearings may be taken with the direction finder within two or three degrees of accuracy; the error due to the instrument itself does not exceed 1 degree. The range of this apparatus with a carborundum detector is from 40 to 50 miles, but with a cerusite detector it may be extended to 160 or 170 miles, which is ample for navigation purposes.

The direction finder has been found applicable to the reception of long wave length signals over great distances. Recent tests with this aerial were carried out by the Marconi Wireless Telegraph Company of America, at their transatlantic receiving station, located at Belmar, N. J., U. S. A. The direction finder loop aerials were erected on a 450-foot mast, and the receiving apparatus designed to be responsive to waves inclusive of 10,000 meters. With a receiver responsive to undamped oscillations, daylight signals were received from the Marconi Stations at Carnarvon, Wales, and Clifden, Ireland; also from the German stations at Nauen, Germany, and Hanover, Germany. The direction of these stations was readily found with a notable degree of accuracy.

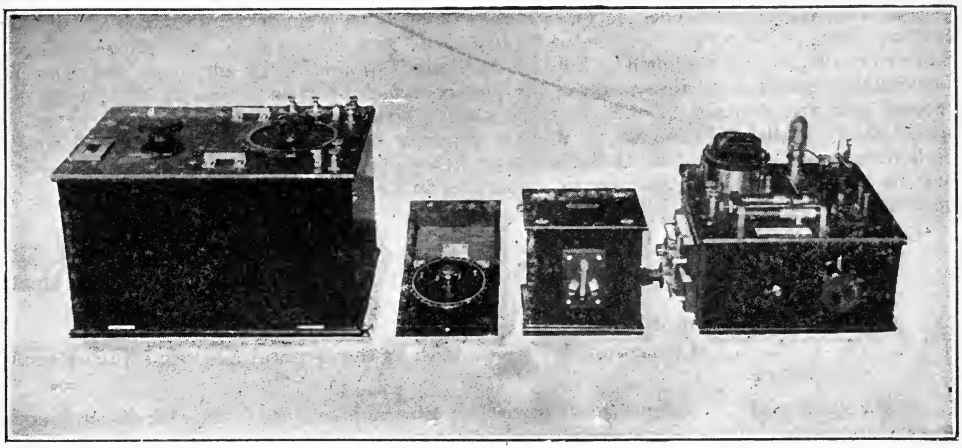

Fig. 277a—The Direction Finder Complete with Fleming Oscillation Valve.

PART XIV.

TRANSMITTERS OF UNDAMPED OSCILLATIONS.

ARC GENERATORS—RADIO-FREQUENCY ALTERNATORS—PLIOTRON OSCILLATOR.

213. In General. 214. The Arc Generator. 215. Signalling with the Arc Transmitter. 216. The Alexanderson High Frequency Alternator. 217. Goldschmidt Radio-Frequency Alternator. 218. The Joly System for the Protection of Undamped Oscillations. 219. Marconi's System for the Production of Continuous Waves. 220. The Pliotron Oscillator.

213. **In General.**—Progress in the United States in the development of sustained oscillation generators has been particularly marked during the past few years.

In fact, by the use of undamped wave apparatus the transmitting range of high-power stations has been materially increased; and in view of the widespread interest in continuous wave equipment, the fundamental circuits and operation of some of the more important systems will be briefly described and explained.

Sustained waves are defined as the waves radiated from a conductor in which alternating current flows. The terms *"undamped," "sustained"* and *"continuous"* are often employed synonymously and are presumed to indicate oscillations of continuous amplitude and constant formation in contrast to *"discontinuous" oscillations* which occur in groups of 200 to 1,000 per second, and are obtained by the recurring charge and discharge of a condenser across a spark gap. A slight distinction in the use of these terms should be made, as electrical oscillations may be continuous in the sense that they are not broken up into distinct groups but the successive cycles may *vary* in amplitude, an example being the type of oscillations generated by the arc.

Continuous waves are set into motion by:

(1) The radio-frequency alternator such as the Alexanderson and Goldschmidt types.
(2) The Poulsen or Duddell arc generator.
(3) A battery of vacuum valve tubes, such as the General Electric Pliotron oscillators.

At the writing of this volume, marine wireless telegraph sets are fitted with discontinuous wave transmitters, almost exclusively, but high power stations employ either continuous or discontinuous wave apparatus. One reason why continuous wave transmitters have not been universally adopted for ship service is accounted for by the fact that the apparatus for the production of continuous oscillations (or waves) generally involves mechanical and electrical problems difficult to surmount or else the apparatus is too intricate or cumbersome to be installated aboard ship. It is therefore safe to predict that discontinuous wave apparatus will be employed in this branch of radio communication for some time to come.

214. The Arc Generator.—A simple system for generating continuous oscillations is the *arc generator,* the circuits of which are shown in Fig. 278, where an arc gap of copper and carbon electrodes A, B, is *shunted* to the terminals of a 500 *volt direct current dynamo.* In this diagram C-1 and C-2 are iron core inductances which prevent the oscillations of radio-frequency discharging back into the generator. C is the usual *condenser* of the closed oscillation circuit and L the variable *inductance.* In the usual manner, the oscillations generated in this circuit are transferred to the antenna circuit by means of an oscillation transformer.

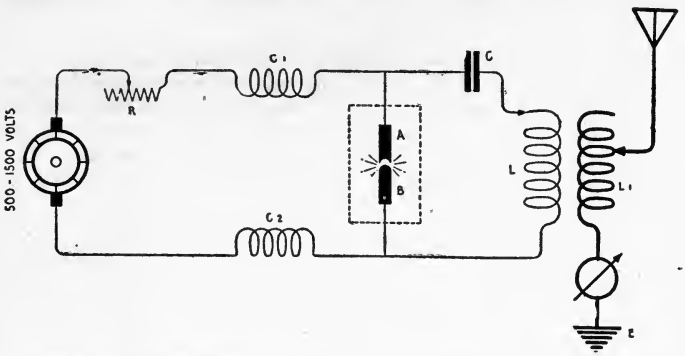

Fig. 278—Fundamental Diagram of the Poulsen Arc Generator.

The functioning of this apparatus is as follows: When the electrodes of the arc A, B, are first placed in contact and then given the correct separation, considerable difference of potential exists across the terminals as can be shown by a voltmeter. Accordingly a certain amount of current flows into the condenser C which receives a charge. The charge taken by the condensers robs the arc of some of its current, which

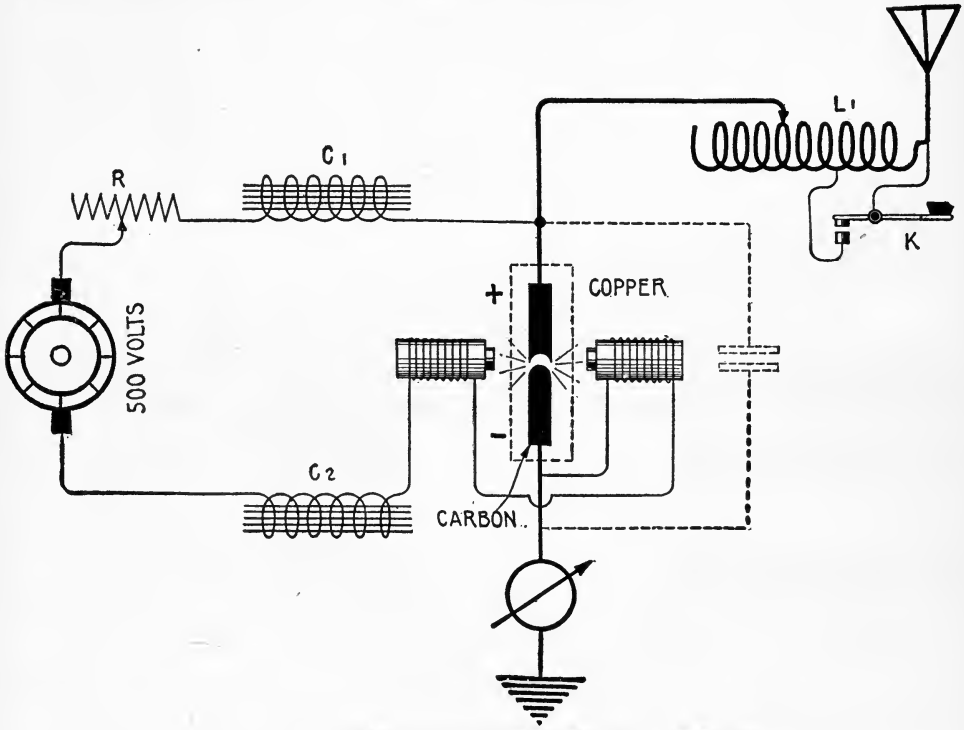

Fig. 279—Complete Circuits of a Modern Arc Transmitter.

further increases the potential across the arc and places a still greater charge on the condenser. When fully charged, the condenser discharges across the arc gap and lowers the arc voltage. This decrease of arc voltage also assists the discharge of the condenser mate-

rially and due to the inertia of the oscillation circuit, the condenser will continue to discharge in the opposite direction, or, in other words, *an alternating current will flow through the oscillation circuit.* Due to the fact that direct current is constantly supplied to the arc and condenser, this process of charge and discharge continues so long as the arc is in operation, and the resultant frequency of oscillation is approximately that due to the *inductance, capacity, and resistance* of the condenser circuit. The oscillations flowing in this circuit are transferred to the aerial wires from which part of their energy is radiated in the form of *continuous waves.*

It is found that enclosing the arc gap in an airtight chamber and feeding it with hydrogen gas, alcoholic vapors or even steam tends to increase the potential difference as well as to prevent the arc blowing out. It has been determined further that powerful electromagnets mounted at a right angle to the arc, tend to increase the potential difference and, at the same time, cause the arc electrodes to burn more evenly. For continuous operation, and to prevent overheating, the containing chamber and the arc electrodes must be cooled by water circulation.

In the latest naval installations, the arc gap is connected directly in series with the antenna circuit as shown in Fig. 279, which is a duplicate of the connections of the U. S. Naval Station at Radio, Va., and other naval stations. It is claimed that connecting the arc in this way has increased the range of such transmitters to a remarkable degree, and that the operation of the system as a whole has been simplified.

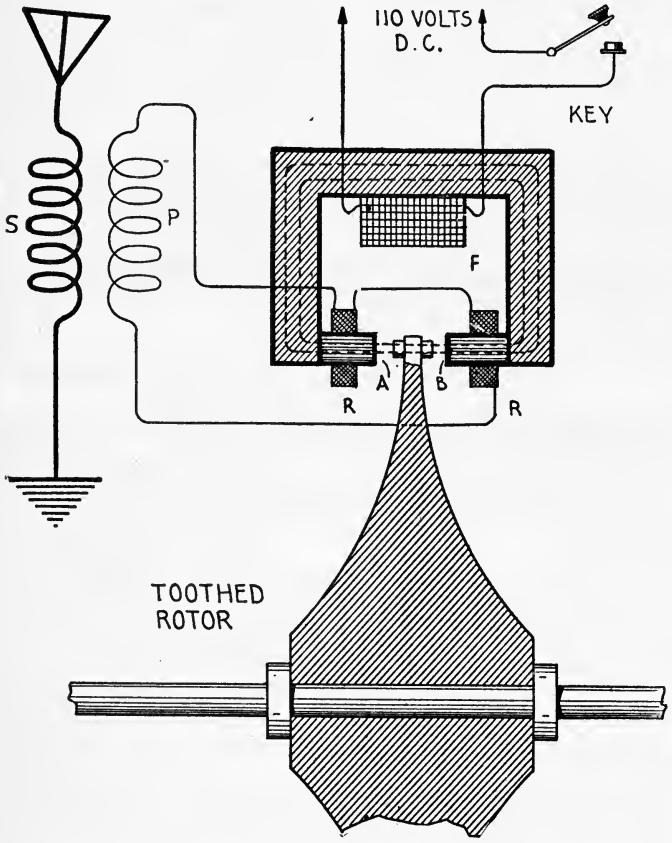

Fig. 280—Details and Connections of the Alexanderson Radio Frequency Alternator.

Referring to the diagram (Fig. 279): The choking inductances are indicated at C-1 and C-2; the regulating resistance for the arc shown at R is connected in series with the blow-out magnets placed at right angles to the arc. A source of direct current of 500 volts is connected to the arc gap, the *plus pole of which is constructed of copper,* the *minus pole of carbon.*

An arc transmitter of this type is adjusted for operation as follows: The arc is struck at low voltage by connecting large values of resistance in the circuit at R. The gap is then lengthened out and the voltage increased until the aerial ammeter indicates a maximum reading. *It is noted that a critical length of arc gap gives the maximum value of antenna current and this is the adjustment always to be aimed for.*

The condenser shunted across the arc (Fig. 279) acts as a by-pass for the radio-frequent currents flowing in the antenna circuit.

215. Signalling with the Arc Transmitter.—It is obvious that a telegraph key cannot be placed in series with the arc gap for signalling and, in consequence, the formation of the Morse characters is usually effected *by changing the inductance of the antenna circuit* at coil L-1, Fig. 279. When the lever of the key K is released, the radiated wave, for example, is 6,900 meters in length, but upon pressing the key, a few additional turns of wire are inserted in the antenna circuit; the wave length thus is increased to 7,000 meters. Now if the receiver is tuned to the wave radiated by the transmitter when the key is closed (7,000 meters), the wave radiated, when the key is open (or when the key lever is up), will not be heard in the receiving telephone, hence the Morse characters are formed at the sender and easily distinguished at the receiver.

The wave radiated when the key is released is termed the "compensation" wave, but the second wave is termed the "signalling wave." In stations employing this system of signalling, it is difficult to distinguish the signals of the sending wave unless very careful resonant adjustments are made at the receiver, otherwise a mixture of the two radiated waves is obtained, which cannot be deciphered.

An important feature of the arc system is the ease by which the length of the radiated

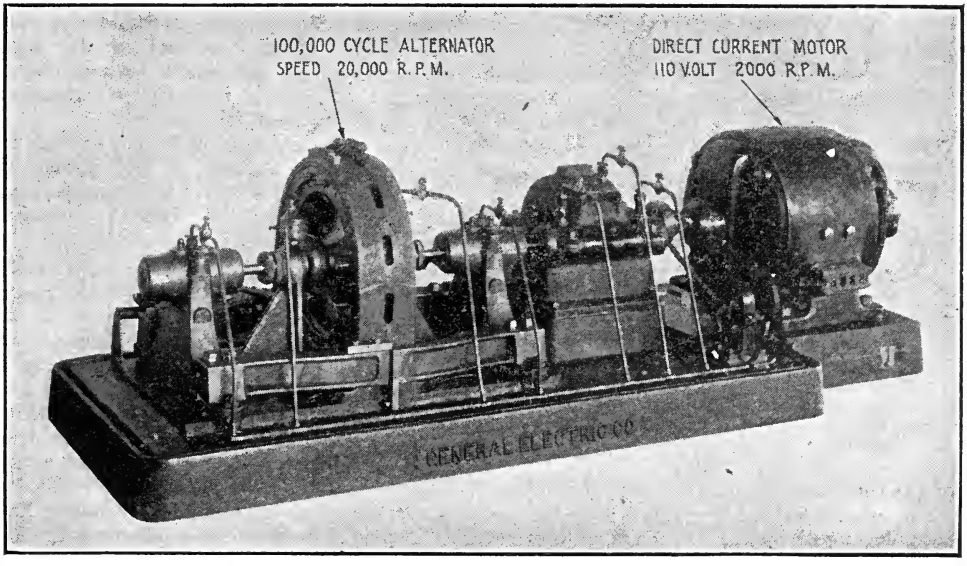

Fig. 280a—The 2 K. W. 100,000 Cycle Alexanderson Alternator.

wave can be changed. This can be instantly effected by simply adding or subtracting turns at the aerial tuning inductance.

Undamped wave transmitters of the arc type operate most efficiently at wave lengths in excess of 3,000 *meters,* and, in fact, the majority of arc stations operate at wave lengths in excess of 6,000 meters. Satisfactory tests have been carried out between the Darien Isthmus of Panama and San Diego, Cal., naval stations with arc sets at the wave length of 18,000 meters.

Arc generators of 100 kilowatts capacity are in daily use. The radio station at Tuckerton, New Jersey, under U. S. Navy control, employs a 100 K. W. arc set which, at the wave length of 7,400 meters, gives antenna current of 150 amperes. Communication is effected with the corresponding station at Hanover, Germany, during the favorable hours of the day.

The U. S. Naval Station at San Diego, Cal., is fitted with a 200 K. W. arc transmitter giving an antenna current of 120 amperes; other naval stations are fitted with 30 K. W. and 60 K. W. transmitters. The naval station under construction at Cavite, Philippine Islands, will be fitted with a 350 kilowatt arc set giving an antenna current of 200 amperes.

Daylight communication between Radio, Va., and Darien Isthmus of Panama, and San Diego, Calif., has been carried on for a number of months.

Certain battleships in the U. S. navy are fitted with 20 or 30 kilowatts arc transmitters operating at the wave length of 4,000 meters. These sets can intercommunicate over distances of 2,000 miles in daylight.

216. The Alexanderson High Frequency Alternator.—A 2 K. W. alternator (Fig. 280-a) has been developed by the General Electric Company which generates current at a frequency of 100,000 cycles per second, *the rotor of the alternator being driven at a speed of* 20,000 *R. P. M.* In this particular type of generator both the armature and field windings are stationary, *the rotor consisting merely of a steel toothed disc.* Current at 15 amperes and 130 volts is obtained from the 2 K. W. machine, which may flow directly into the antenna circuit or may be induced therein by an oscillation transformer. In the inductive method, shown in Fig. 280, currents of radio-frequency flow through the primary winding of the oscillation transformer P, the secondary S being connected in series with the antenna. Signalling is accomplished by placing a telegraph key in series with the field winding of the alternator or by variation of the localized inductance in the antenna circuit, as with the arc system.

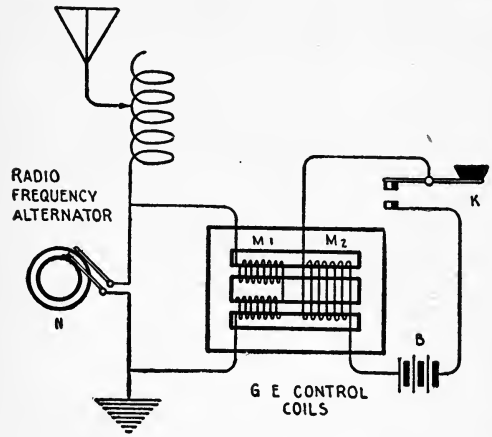

Fig. 281—Showing the Fundamental Circuit of a Radio-Frequency Control Device Developed by the General Electric Company.

In the diagram, Fig. 280, the *excitation field winding,* F, consists of a single coil, wound inside the frame of the entire machine. The rotor is a toothed disc with 300 projections, the space between teeth being filled with a non-magnetic material to cut down wind friction.

The *armature coils,* R, R, consist each of a single turn of wire wound zigzag in slots, and any consecutive pair may be said to constitute a pair of coils of one turn each.

Current is induced in the armature coils as follows: When a tooth on the rotor comes opposite the armature cores, A, B, the magnetic flux passes through windings R, R, but a minimum of flux threads through the coils, when the tooth lies between two armature coils. Thus an oscillatory current is induced in R, R, the frequency of which is determined by the speed of the rotor and the number of field poles.

A unique method for *controlling the antenna current of an undamped transmitter* has been developed by the engineers of the General Electric Company, the fundamental principle of which is shown in Fig. 281. In this system, a specially constructed, magnetically saturated, amplifying coil is connected in shunt to the radio-frequency alternator, and if a telegraph key is inserted in the direct current circuit as at K and proper adjustment made of the circuit connected to battery B, the effect of opening and closing the key is as follows:

When the telegraph key, K, is up (the contacts at the rear of the lever closed), the iron core, by proper selection of ampere turns of the coil M-2, becomes magnetically saturated, and the self-inductance of the winding M-1 is practically that of a simple coil without an iron core. When the telegraph key is pressed and the control circuit of battery B opened, the iron core, in respect to the winding M-1 becomes magnetic, and its self-induction is at a maximum. In this position of the telegraph key, the voltage across the terminals of the radio-frequency alternator is maximum and maximum current flows in the antenna circuit. In this way the dots and dashes of the Morse telegraph code can be readily formed, and in fact, the signals may be transmitted at an extremely high speed with a practically non-arcing control.

Practically no current is induced in the winding M-2 (the control winding) because it includes both legs of the core of winding M-1. It is necessary in this system that the ampere turns of windings M-1 and M-2 be practically equal.

*Alternate arrangements of this circuit are in use, which are fully described in the April, 1916, Proceedings of the Institute of Radio Engineers.

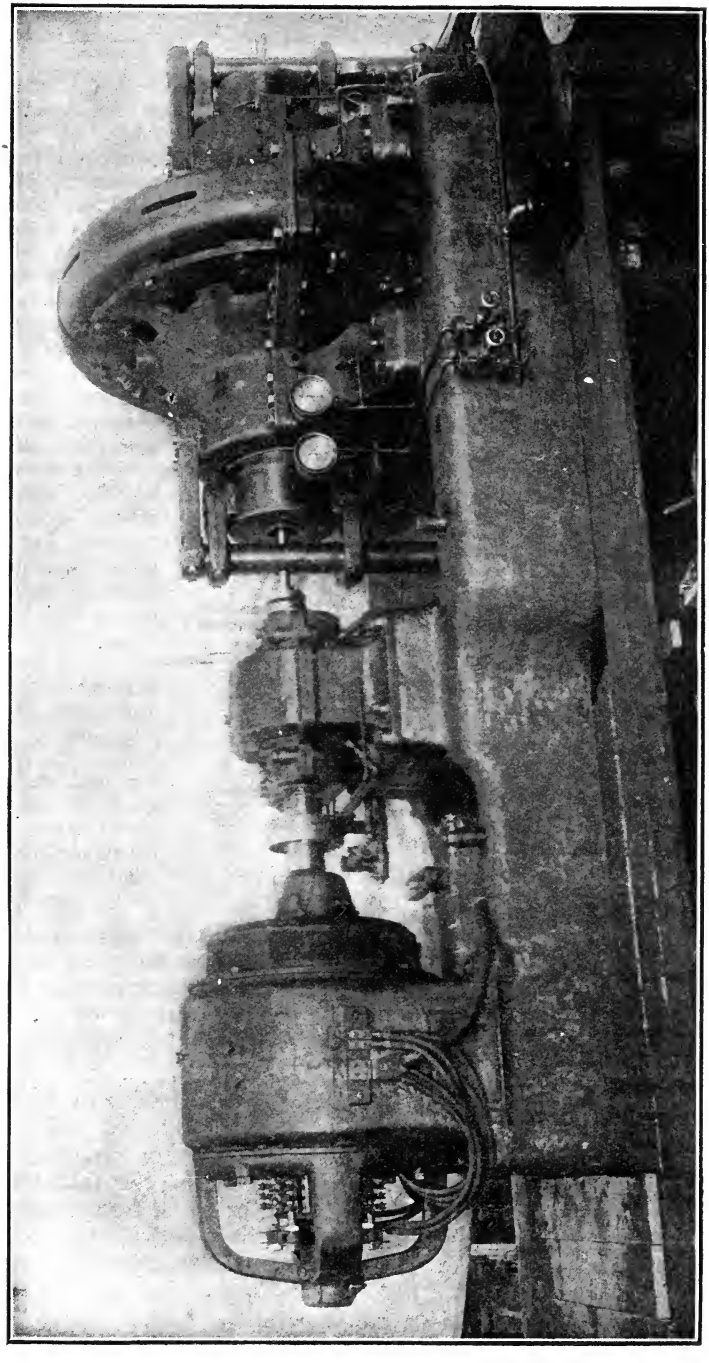

Fig. 282—The 75 K. W. 50,000 Cycle Alexanderson Alternator.

For the transmission of speech, a microphone transmitter may be connected in the circuit of B and wireless telephony carried on at large powers.

A photograph of a 75 K. W. high frequency alternator of the Alexanderson type appears in Fig. 282. So far, alternators of this capacity have been used for laboratory experiments only, but there is no reason to believe that they will not prove a commercial success, at least at high power land stations.

Radio-frequency alternators for the production of lower frequencies, in the region of 30,000 cycles per second, are less difficult to construct than the type just described, on account of the reduced peripheral speed of the armature. An alternator, for example, generating current at a frequency of 30,000 cycles per second would excite an aerial having a natural wave length of 10,000 meters and provided the proper output could be obtained would be of great use for land station work, but an alternator having a normal speed of 20,000 revolutions per minute obviously is not practical for continuous service at either ship or shore stations where a twenty-four-hour operating schedule is in effect. It is just, however, to state that high speed alternators such as the Alexanderson type are monuments of engineering skill, and many mechanical and electrical problems, heretofore considered impossible of solution, have been completely solved.

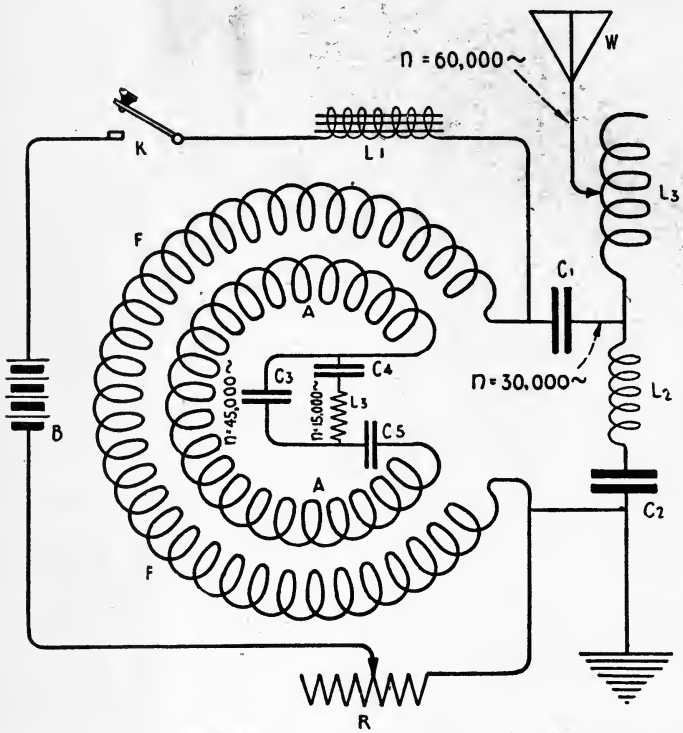

Fig. 283—Complete Circuit of the Goldschmidt Alternator.

217. Goldschmidt Radio-frequency Alternator.—By adopting the simple principles of electrical resonance, Dr. Goldschmidt has designed an alternator which, by the use of a single armature, generates radio current at frequencies from 30,000 to 75,000 cycles per second. The great advantage of this alternator is the low speed of the armature, which, even in the 200 K. W. sizes, does not exceed 3,100 R. P. M.

It will be observed from diagram, Fig. 280, that in addition to the stator and rotor windings of the usual alternator, a number of external inductance coils and condensers are connected in both the shunt and rotor circuits, which are employed for tuning these circuits to several frequencies. In fact, by correctly proportioning the inductance and capacity, current at a frequency of 60,000 cycles per second can be taken from the field winding, and if made to flow in a properly tuned antenna circuit will radiate waves, 5,000 meters in length.

In the diagram, Fig. 283, *the field windings of the alternator* are represented at F (generally referred to as the stator) and the armature winding at A known as the rotor. The armature inductance A and the condenser C-4 are shunted by the inductance L-3 and the condenser C-5. Similarly, L-3 and C-4 are shunted by condenser C-3. The values of C-4, L-3, C-5 and A are so chosen that either C-4 and A, or C-5 and L-3 are in resonance to the initial frequency of the generator, that is to say, C-4 and A or C-5 and L-3 have identical

time periods and since they are connected in parallel, the period of the circuit remains unchanged and in resonance with the initial frequency of the alternator. The function of inductance L-3 and condenser C-4 is to place the armature on short-circuit at a given frequency. In fact, it would not be possible to completely short-circuit the rotor winding for radio-frequent currents by merely placing a short piece of wire across the terminals. However, by placing another circuit containing inductance and capacity of identical time period in shunt to the rotor, a complete short-circuit is effected.

The circuit of the *stator* F, C-1, L-2 and C-2, are similar to those of the rotor A, but this circuit is tuned to twice the fundamental frequency of the alternator. Also, the distributed capacity of the antenna system takes the place of the condenser, C-3, of the rotor circuit.

The field winding of the stator, F, primarily magnetized by the source of direct current, B, has the choking coil, L-1, connected in series to prevent the oscillations of radio-frequency flowing back to the exciter B. *A regulating rheostat* R permits close variation of the field current.

It will assist the student to gain an understanding of the operation of this generator, if he will but consider the following well-known phenomenon: If a common alternating current generator armature revolves at such speed as to generate an initial current at a frequency of 60 cycles per second, and the field coils, for example, are mechanically rotated in the opposite direction at a similar speed, it is plain that the relative motion is doubled and therefore the frequency will be doubled. It is also established that we might dispense with the revolving appliances for the field coils, and pass an alternating current of a given frequency through a stationary field winding.

If the speed of the armature is N^1 revolutions per second and the frequency of the field current N cycles per second, there will be induced in the armature E. M. F.'s of two frequencies, one of $N + N^1$, and another of $N - N^1$.

In case N and N^1 are just equal, then, the frequency of the current induced in the armature will be $N + N^1$ or 2N, and $N - N^1$ or zero. Hence, if current of 60 cycles flows through a four pole field winding and the armature is driven at 30 revolutions per second, current at a frequency of 120 cycles per second will be generated in the armature.

The student, having some knowledge of the fundamental principles of the induction motor, is well familiar with the fact that a rotating magnetic field is produced by an alternating current flowing through a stationary field winding. Such a current flowing through the stator of a generator, for instance, will give rise to two oppositely rotating magnetic fields of angular velocity corresponding to the frequency of the current, and if the speed of the armature is carefully adjusted to the velocity of the field, it will cut through one of these fields and thereby double the frequency, but it will be stationary in respect to the other field.

By employing several generators to step-up the frequency, this principle might be extended further. For instance, current of a certain frequency generated in the armature of generator No. 1 could be passed through the field winding of generator No. 2 and by proper selection of armature speeds, the frequency would be doubled in the second generator, and so on. But, owing to the number of steps involved in such frequency transformation, there would be serious current losses which could not be compensated for. However, Goldschmidt's alternator accomplishes this in a single armature and by adoption of the principles of electrical resonance, *several frequencies are generated in the armature and field windings.* The current of one of these frequencies is selected and diverted to the antenna system where part of the energy is radiated in the form of electromagnetic waves.

The design of Goldschmidt's alternator is such that when driven at normal speed, the initial frequency of the current generated in rotor A is 15,000 cycles per second. Since the inductance and capacity of the rotor circuit are selected to give it a natural time period of oscillation suitable to the fundamental frequency, an alternating current of considerable intensity flows (in the armature windings A, C-4, L-3, C-5).

The field of the rotor corresponding to this frequency is composed of two component magnetic fields of equal intensity, which rotate in opposite directions in respect to the windings of the rotor. The velocity of one of these fields is zero in respect to the rotor, but the other travels at twice synchronous speed and therefore induces in the circuits of the stator an E. M. F. at a frequency of 30,000 cycles per second (and zero frequency) (N + N and N — N or 2N and 0). And since the circuit F, C-1, L-2 and C-2 is tuned to this frequency, current of considerable amplitude flows.

Now the E. M. F. of 30,000 cycles, induced in the stator, induces in the rotor two frequencies, one of 45,000 cycles per second and another of 15,000 cycles (2n + N and 2N — N

or 3N and N). The current of 45,000 cycles flows through the condenser C-3, but the current of 15,000 cycles can, by proper design of the circuits, be made to nearly neutralize the former current of 15,000 cycles in the rotor. There remains, therefore, in the rotor, an E. M. F. at a frequency of 45,000 cycles per second which flows through the condenser C-3, and due to a well-defined resonant adjustment, a powerful current flows.

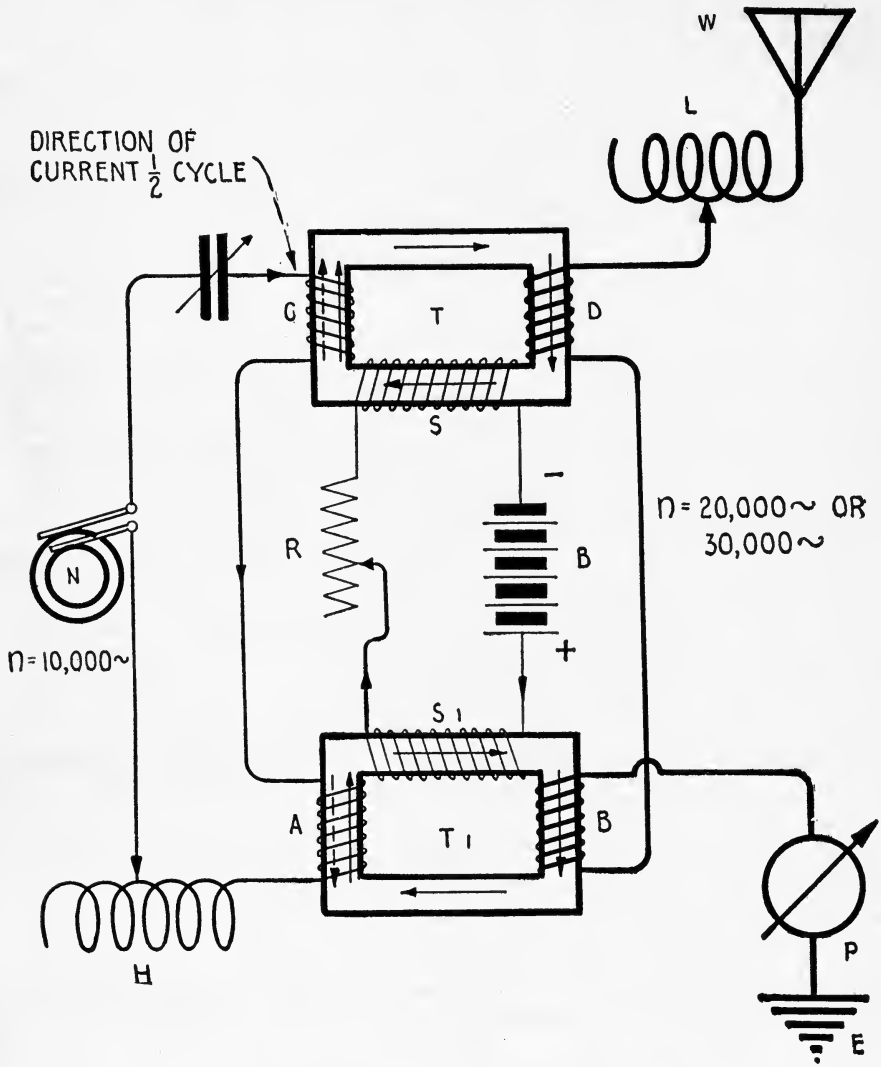

Fig. 284—The Joly-Arco Undamped Wave Transmitter.

The current of 45,000 cycles flowing in the rotor, will induce in the winding of the stator, current at 30,000 cycles per second and 60,000 cycles (3N — N and 3N + N or 2N and 4N). This current of 30,000 cycles nearly neutralizes the former current of 30,000 cycles, leaving in the circuits of the stator, current at a frequency of 60,000 cycles, to which the antenna is carefully tuned. Because the impedance of L-2, C-2, is considerably greater than that of the antenna, the current of 4N oscillates in the antenna circuit.

Signalling is accomplished in the Goldschmidt system by placing a key in the exciter circuits, the circuit being alternately opened and closed.

An alternator of this type installed at the radio station, Tuckerton, New Jersey, U. S. A., is employed for transatlantic communication with a corresponding station located at Han-

over, Germany. Although capable of generating 200 K. W., it is normally used at 100 to 150 K. W. The driving motor is of 250 H. P. capacity, operated from 220 volts direct current and has a speed of 4,000 R. P. M.

The armature of the generator is constructed of very thin laminated iron and revolves within 1-32 of an inch from the field poles. Oil is pumped to the bearings at considerable pressure and afterwards cooled through a refrigerating machine.

Operated at the wave length of 7,400 meters with a generator input of 175 K. W., 135 amperes flow into the antenna at the Tuckerton station. When atmospheric electricity is not severe, communication is maintained with Hanover, Germany, but the stations operate at a disadvantage because they are not duplexed as are the Marconi Transoceanic stations.

218. The Joly System for the Production of Undamped Oscillations.—The U. S. Radio station at Sayville, Long Island, employs the Joly-Arco system for the production of continuous waves. In this system a specially designed generator having an initial frequency of 10,000 or 15,000 cycles per second is connected to two transformers having magnetically saturated iron cores which are designed to double or triple the frequency of the alternator.

A fundamental circuit diagram of this system is shown in Fig. 284, wherein an alternator N having an initial frequency of 15,000 cycles per second is connected to the two specially designed transformers, T and T-1. Transformer T has the excitation winding S, which saturates the core fully, a similar winding S-1 being provided for the transformer T-1. A source of direct current for the excitation windings S and S-1 is indicated at B with the regulating rheostat, R, connected in series. The current generated by the alternator N flows through the primary windings C and A, the complete primary circuit being tuned to resonance with the initial frequency of the alternator by the variable inductance and the variable condenser connected in series with the circuit.

The *secondary circuit, or antenna system,* embraces the windings D and B connected in series with the antenna inductance L, the earth connection E and the aerial wires W. The hot wire ammeter M is connected in series with the earth lead to determine conditions of resonance. As intimated previously, the transformers T and T-1 are fully saturated, the magnetization being brought to the knee or bend of the characteristic saturation curve by carefully regulating the rheostat R.

To illustrate the functioning of this apparatus, let us assume that the primary coils are wound on the cores so that the direction of the magnetic lines of force will be that indicated by the *full-line* arrows; furthermore, assume that at a particular half cycle of current from the alternator, the direction of the current through the primary winding is such that the corresponding magnetic flux flows in the direction indicated by the *broken-line* arrows; then the normal flux of the core T will not be increased because this core is already saturated fully, the added flux flowing in the direction of the core flux, but the normal flux of the core T-1 will be opposed by the flux of the winding A and the total lines of force flowing through the core, therefore, reduced. This reduction of flux, followed by subsequent rise to normal saturation upon the completion of an alternation from N, causes two changes of flux through coil B of transformer T-1, resulting in the production of two alternations in that winding for one alternation of current from N. The final effect is to induce current of double frequency in the antenna system.

Let the next half cycle of the alternator N be completed through windings A and C; then, the change of flux takes place in the core of the transformer T, rather than in T-1, resulting in the induction of two alternations of current in the secondary winding D. Summing up the foregoing, a complete cycle of current from the generator N will induce two alternations of current in the coil B, followed by two alternations of current in the coil D, thereby doubling the initial frequency of the generator current. This current flows in the antenna circuit which has been carefully tuned to resonance, and part of the energy is converted into electric waves.

By an additional set of transformers, the current of double frequency generated by the first set of the transformers may be again doubled, but the efficiency of the apparatus, as a whole, decreases considerably as the steps of transformation are increased.

Another system of transformation has been evolved by Joly, in which the frequency of the generator may be tripled by a single set of transformers, which are adjusted to have—when A. C. current flows—unequal degrees of saturation. In this system the D. C. excitation winding for the transformer is dispensed with.

In systems of this type in order that resonance between the alternator current and the antenna system may be maintained, it becomes important that the fre-

quency of the alternator may remain constant; in consequence, the speed of the driving motor must be carefully governed and to this end several devices have been brought forth, the principal one being a signalling key fitted with a special set of contacts which, just previous to the closing of the key, add resistance in the motor field circuit, maintaining a practically uniform speed of rotation.

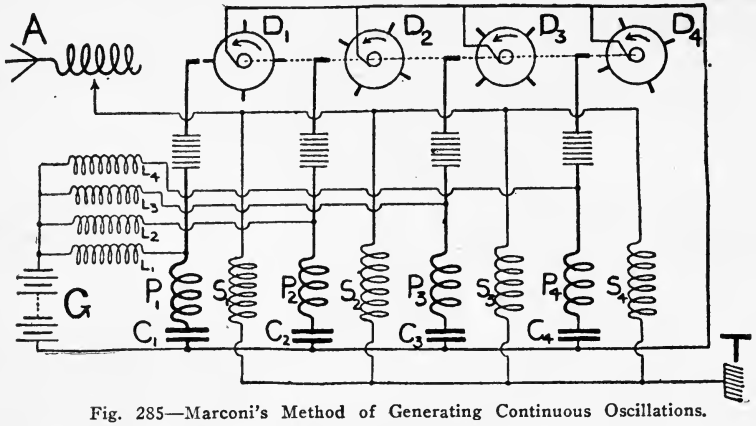

Fig. 285—Marconi's Method of Generating Continuous Oscillations.

Signalling is accomplished, in the Joly system, by inserting a key in series with the direct current excitation winding, or by interrupting the generator circuit to the primary winding of the transformers by a special electromagnetic key, or by cutting in and out a few turns of the aerial tuning inductance. The first-named method is the one in use at present. The alternator at the Sayville station has a capacity of 100 kilowatts and gives antenna current of about 140 amperes. Fair communication is effected with the station at Nauen, Germany, throughout the 24 hours of the day, but the best results have been obtained during the dark hours. At present the Sayville station operates at the wave length of 9,400 meters, the antenna frequency being slightly above 30,000 cycles per second.

219. Marconi's System for the Production of Continuous Waves.—Signor Marconi and his engineering staff have developed an exceedingly novel method for generating continuous oscillations, doing away with many of the problems encountered in the construction of intricate high frequency alternators.

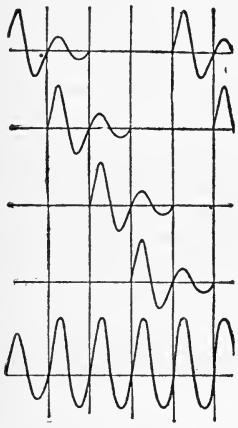

Fig. 286—Showing How Groups of Damped Oscillations Can Be Made to Overlap One Another.

The fundamental principle upon which the system is based is disclosed in the diagram, Fig. 285, wherein a number of *disc dischargers,* D-1, D-2, D-3, D-4, are mounted on a common shaft, each of which is connected to an oscillation circuit, such as P-1 and C-1, P-2 and C-2, etc. The main condensers, C-1, C-2, C-3, C-4, are charged by a source of high potential direct current, indicated at G, consisting of two 5,000 volt generators connected in series. The disc dischargers, D-1, D-2, etc., are set on the shaft so that the condensers discharge and recharge at regular intervals in succession, and if the velocity of the discs is adjusted so that the interval between the beginning of the discharge of one condenser and the beginning of the discharge of the next condenser is equal to the *period of the oscillations* in the antenna circuit, or an exact multiple thereof, the oscillations flowing in the antenna circuit will overlap, producing continuous oscillations of practically constant amplitude, as shown in Fig. 286.

To insure that each condenser discharges at the right moment and that the successive groups of oscillations induced in the antenna circuit are in phase, the discharge circuit is provided with an auxiliary timing rotary disc discharger, known as the *trigger or timing disc* (not shown in the drawing), which performs the function of setting off the main spark discharge at the proper time.

A modified form of the *timed-spark oscillation generator* is shown in U. S. Patent 1,136,477 of 1915, one arrangement being that shown in Fig. 287. Here a direct current generator is indicated at G and a choking coil at L-1. Since G has an electromotive force of about 10,000 volts, condensers K-1 and K-2 receive a charge which enables them to discharge across the spark gap. A terminal of either condenser is connected to the disc dischargers, D-1 and D-2, and the studs of the latter are placed so that condensers C-1, C-2 and C-3 are alternately and successively charged, let us say, through inductance L-2 and successively discharged and recharged through L-3.

The oscillations set up in L-2 or L-3 are made to act inductively on an intermediate circuit, L-4, L-5 and C-4, and if the discs be revolved at a certain speed and are properly timed, the trains of oscillations induced in the intermediate circut overlap one another, resulting in a continuous flow of oscillations in the antenna circuit, A-1, E.

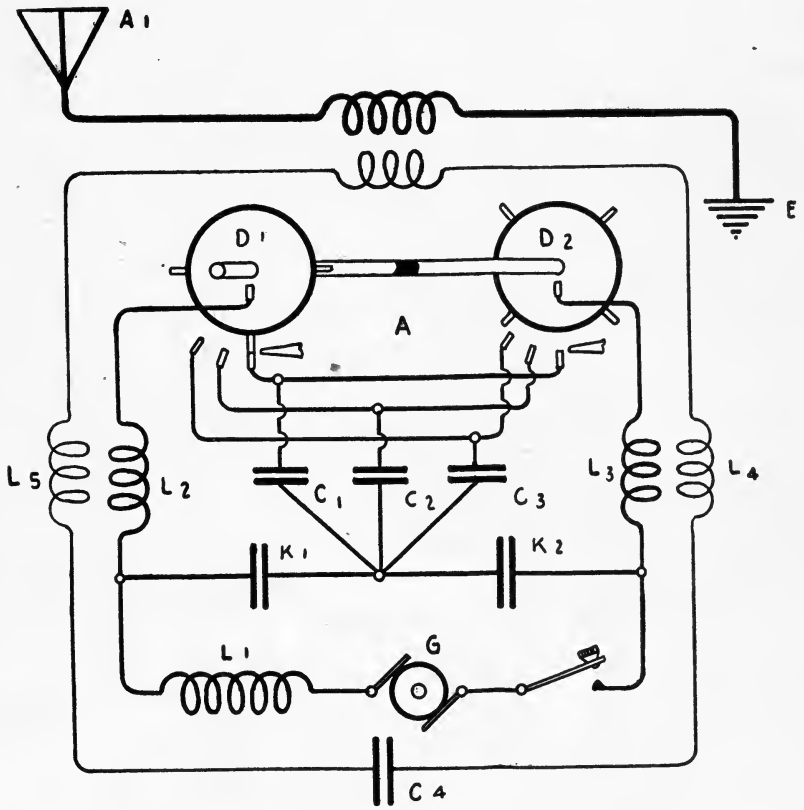

Fig. 287—One Type of Marconi Continuous Wave Generator.

In this system, signalling is accomplished by inserting a high tension relay key in series with the source of direct current from the generator or by closing the circuit of the timing disc.

The apparatus for this system has been developed further by the Marconi's Wireless Telegraph Company, Ltd., and is not used at present as shown in either Figs. 285, 286 or 287. The details of the more modern apparatus cannot be published for the present, but it may be remarked that a transmitting set of this type is in daily use at the great Marconi station at Carnarvon, Wales, England, and a similar set will be installed in the transoceanic station at Marion, Mass., U. S. A.

With a power input of less than 100 K. W., the author has copied the signals from the Carnarvon station in New York City during the daylight hours with an aerial 100 feet in length. The signals were considerably stronger than those obtained from other foreign

stations using radio-frequency alternators of greater power. The wave length employed during these tests was close to 10,000 meters.

220. The Pliotron Oscillator.—Highly exhausted two or three element vacuum valves of enlarged dimensions can be employed to generate current at audio- or radio-frequencies. In the form designed by the engineers of the General Electric Company, the device has been termed a *"Pliotron."* The Pliotron bulb contains a *tungsten filament* F (hot cathode) brought to a state of incandescence by 110 or 220 volts direct current, a *grid of tungsten,* G, and a *tungsten plate,* P, (anode), as indicated in Fig. 288.

The filament F is brought to incandescence by a source of direct current, A, B, which source also supplies current for the anode circuit between the filament and the plate.

The radio-frequency inductance of the anode circuit, indicated at L, is shunted by the condenser C-1. L-2, the radio-frequency inductance of the grid circuit, also has the shunt condenser C-2. By variation of the capacity of C-1 and C-2, the grid circuit and anode circuit may be tuned to resonance and the oscillations flowing in the anode circuit repeated back to and reinforced through the grid circuit by inductively coupling coil L to L-2. By means of a third winding, L-3, coupled to either L or L-2, current of any desired frequency can be generated by proper variation of inductance and capacity; in fact, current at frequencies from 60 to 1,000,000 cycles per second can be obtained.

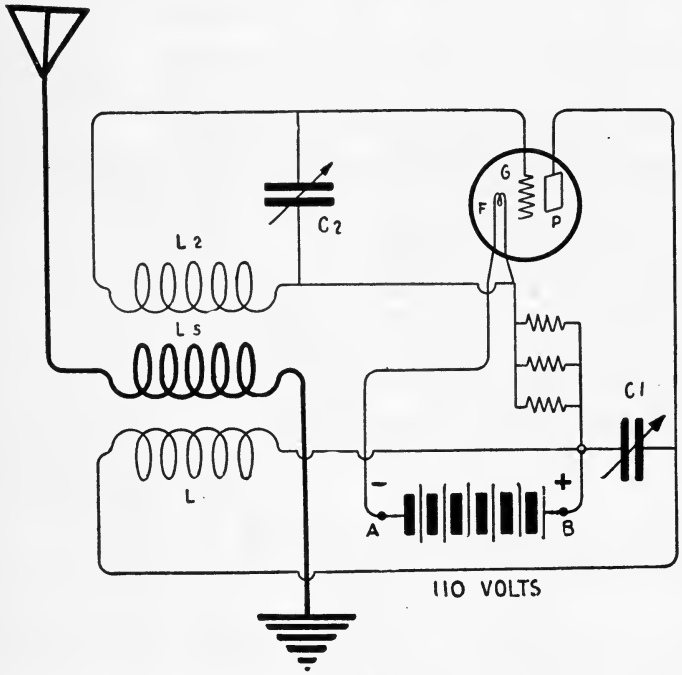

Fig. 288—The Pliotron Oscillator Connected for the Production of Radio-Frequency Oscillations.

The radio-frequent currents generated in the circuits of the Pliotron can be transferred to the antenna system by connecting the terminals of the coil L-3 to the antenna and earth wire, the precaution being taken to tune the aerial circuit to resonance with the local current. A number of Pliotrons may be connected in parallel and direct current at any desired power converted into oscillations of radio-frequency.

The Pliotron vacuum bulb can also be used to vary the amplitude of the oscillations in an antenna system traversed by undamped oscillations. If properly connected, it is applicable for radio-telephony as well as telegraphy. If the anode of the Pliotron is connected to a point of high potential in the antenna system and the negative side of the filament to earth, and the grid potential of the Pliotron is strongly negative, no leakage to earth takes place, but if the negative potential is decreased, sufficient energy will be withdrawn from the antenna to strongly damp the oscillations. In fact, practically all the energy of the antenna oscillations can thus be diverted to earth.

If an external electromotive force of the correct value is impressed upon the grid through a small telegraph key, the dots and dashes of the Morse code are formed by simply closing the circuit and thus varying the grid potential.

PART XV.

RECEIVERS FOR UNDAMPED OSCILLATIONS OR CONTINUOUS WAVES.

221. The Problem. 222. The Tikker. 223. The Heterodyne System. 224. The Vacuum Valve as a Source of Radio-Frequency Oscillations. 225. Vacuum Valve as a Combined Detector, Amplifier and Beat Receiver. 226. Oscillating Vacuum Valve Detector Circuits of the U. S. Navy. 227. The Goldschmidt Tone Wheel. 228. Marconi System for Reception of Undamped Oscillations.

221. The Problem.—If an ordinary crystal rectifier be connected to a receiving set tuned to a continuous wave transmitter, owing to the lack of discontinuity in the advancing wave, a continuous pulsating current flows through the receiving telephone. These pulsations take place at such rapid rates that the diaphragm of the telephone is either held down continuously or repelled continuously resulting in no sound except at the beginning or end of the flow.

To make undamped oscillations audible, we are compelled to break up the oscillations of either the transmitter or receiver into *groups* suitable for maximum response in the head telephone or to supply other means at the receiver to make them audible.

The receivers at present in use are:

(1) The Poulsen tikker or chopper;
(2) The "Heterodyne" system;
(3) The Goldschmidt Tone Wheel;
(4) The Regenerative Vacuum Valve (used as a "beat" receiver).

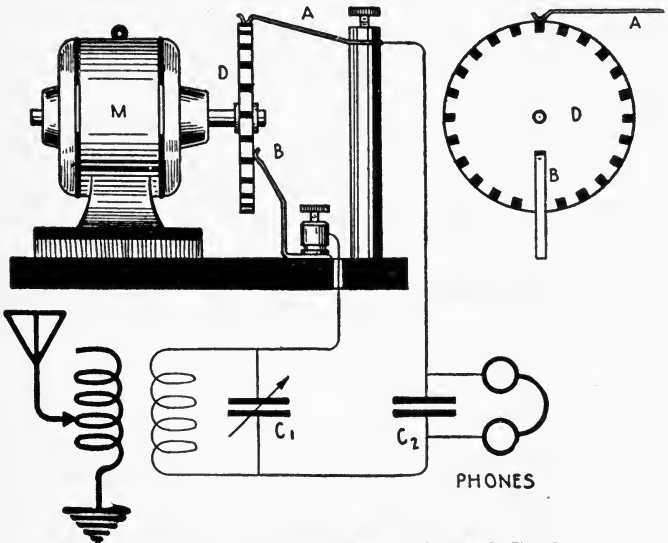

Fig. 289.—The Simple Poulsen Tikker and Circuit.

The mode of functioning of these detectors is briefly described as follows: *The Poulsen tikker interrupts the circuits of the receiving tuner at a uniform rate per second (approximately 300 to 600 times); the heterodyne system is based upon the interaction of two radio-frequent currents in the receiving aerial, resulting in the production of an audio-frequent current in the telephone circuit; the Goldschmidt tone wheel converts the current of radio-frequency (the incoming oscillations) into an audio-frequent current and the regenerative "beat" receiver employs*

the vacuum valve as an oscillator at radio-frequencies to produce the "heterodyne" effect. This, combined with the well-known relaying action of the vacuum valve and its ability to repeat currents of radio-frequency, makes a receiver of unusual sensitiveness.

222. The Tikker.—In its commercial form the tikker consists of a *commutator interrupter,* the principal of which is shown in Fig. 289.

A disc D mounted on the shaft of the motor M has a number of teeth filled in between with insulating material such as fibre. The radio-frequent currents flow from brush B to A through the disc which interrupts them from 300 to 1,000 times per second. The charge built up in the condenser, C-1, by resonance with the aerial system discharges into the telephone condenser, C-2 (Fig. 289), at regular intervals. Condenser C-2, in turn, discharges through the head telephone creating a single sound for the charge accumulated. Due to the fact that the tikker discharges C-1 at various potentials, or we might say, at different points on the cycle of the incoming oscillations, a non-uniform note is produced lacking the desired musical pitch for reading through atmospheric electricity. However, the tikker suffices as a simple receiver and good results have been obtained by its use at several ship and shore stations.

A favored form of circuit interrupter for the reception of undamped oscillations is the *sliding wire* or *slipping contact detector,* shown in Fig. 290. In the diagram a small brass wheel, W, mounted on the shaft of the motor, M, is in contact with the brush B. The terminals of the slipping contact, B, are connected in the circuit of the tuner as the tikker, D, of Fig. 289. The circuit is completed through the brush, B-1, in contact with the wheel W. When the wheel is in rotation, there is a constant slipping and gripping of the brush B on the wheel which makes a contact of variable resistance, causing the charge accumulated in the telephone condenser to vary in accordance. The note in the telephone will have a pitch in accordance.

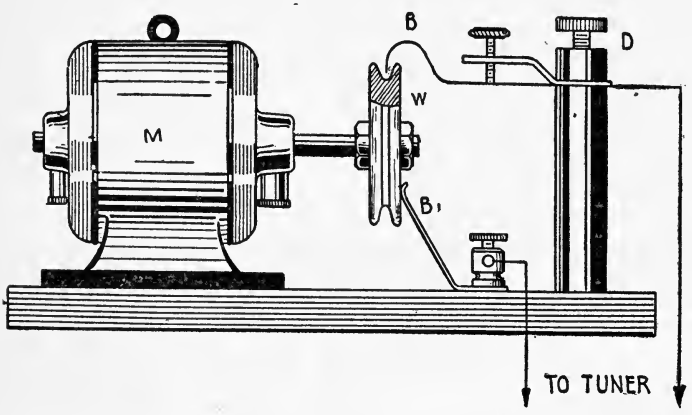

Fig. 290—The "Slipping Contact" Detector for Reception of Undamped Oscillations.

Both the tikker and the slipping contact detectors are considered as "current operated" devices, meaning that they function best in a tuning circuit which affords a maximum of current rather than a high voltage. The coils of the tuner for these oscillation detectors are wound with *Litzendraht* wire or conductors of equal high frequency conductivity.

These detectors are applicable to the reception of damped oscillations or discontinuous waves, but, owing to the discontinuity of the wave trains, an irregular note, much similar to the discharges produced by atmospheric electricity, is obtained.

223. The Heterodyne System.—The functioning of the heterodyne* receiver is based upon the interaction of alternating currents of two frequencies in some part of the receiver circuits.

For example, if an alternating current of 50,000 cycles per second flows through a given circuit, and there is superposed on it another current having frequency of 49,000 cycles per second, a *"beat" current* will result having a frequency equal to the numerical difference of the two applied frequencies or 1,000 cycles per second. The same frequency would be obtained by superposing a current of 51,000 cycles upon another current of 50,000 cycles; in fact, in any case, the frequency of the beat current could be the difference of the two applied frequencies.

By adoption of this principle we are afforded ready means for making audible undamped oscillations from a given transmitter at the receiver. One method is shown in Fig. 291,

*Abroad, this receiver is called the "local interference" receiver.

where the receiver circuits are indicated by L-1, L-2, the crystal rectifier D, etc. An *undamped oscillation generator* consisting of the D. C. *arc gap* A, B, the *variable condenser* C and *inductance* L are shown at the base of the drawing. By means of this generator, a steady stream of oscillations is supplied to the aerial system through the coupling coil L-3, the frequency of which can be altered either by the condenser C or by the inductance L.

Now, if the receiving tuner, for example, is tuned to the wave length of 6,000 meters corresponding to an oscillation frequency of 50,000 cycles per second (which may be the wave length of a given transmitting station), and the arc generator adjusted to generate oscillations at a frequency of 49,500 cycles per second, a beat current of a frequency of 500 cycles per second will flow in the circuit of the receiver where it will be rectified by the detector, D, and made audible in the head telephone P.

By carefully adjusting the local frequency, the beat note can be varied from a pitch equivalent to that of a 200 cycle alternating current up to the limits of and beyond audibility. The interaction of these two frequencies in the receiving system not only makes undamped oscillations audible but also amplifies the received signal to a marked degree. *Even damped oscillations may be amplified by this means,* but in this case the normal note of the spark transmitter is distorted, the resultant note being of lower pitch. The note of the local beat current generated by the heterodyne receiver has the most uniform pitch when the sending station employs a radio-frequency alternator; although flute-like tones are obtained from arc transmitters, the "beat" current does not have anywhere near the musical pitch that can be obtained from the radio-frequency alternator. The arc generator of Fig. 291 might be replaced by a radio-frequency alternator of small output or by a buzzer excitation system, but a generator giving genuinely undamped oscillations is preferred.

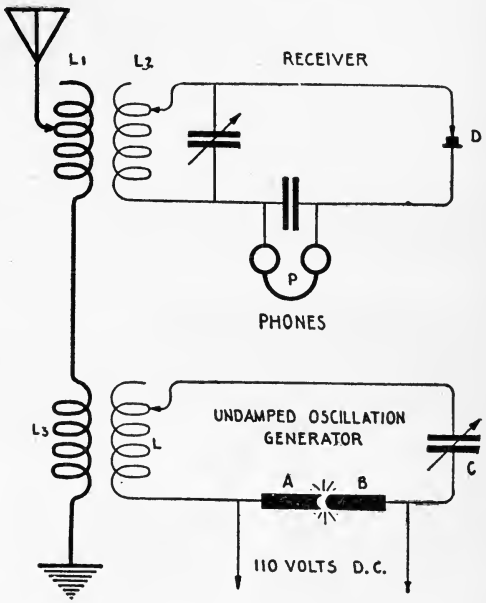

Fig. 291—Early Form of Heterodyne Receiver.

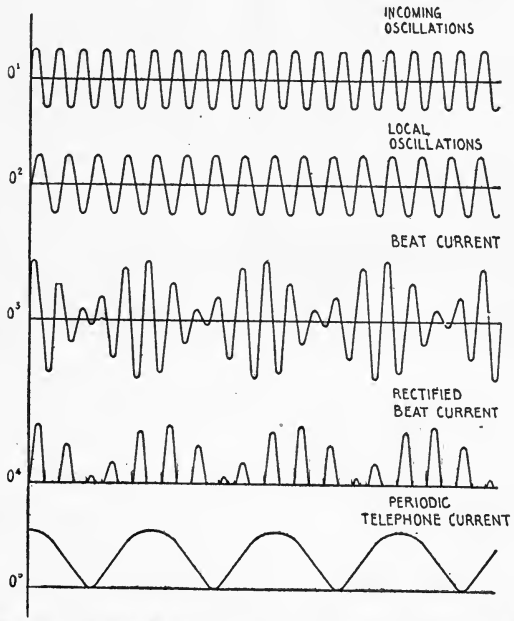

Fig. 292—Curves Showing the Functioning of the Heterodyne Receiver.

The precise actions taking place in the heterodyne receiver of Fig. 291 can be explained by the series of curves in Fig. 292. The oscillations O-1, indicated on the upper line, are those *incoming* at a given station (without the local arc generator in operation) while those on the second line O-2 correspond to the *frequency of the arc generator* and are of a lower order of frequency than the incoming oscillations.

The third curve O-3 indicates the resultant *"beat" current due to the interaction of the local frequency and that of the incoming signal.* This current has zero value when the two groups of oscillations *oppose* and max-

imum value when they *assist or are in phase,* and the frequency of the beat current is the numerical difference of the frequency of the incoming oscillations and that of the local generator.

When rectified by the crystal, the successive cycles of the beat current take the form of the curve O-4, where the *negative halves have been cut off and the positive halves remain,* for operation of the telephone, as shown by the curves of line O-5.

224. The Vacuum Valve as a Source of Radio-Frequency Oscillations. —If a three element vacuum valve is connected up as in Fig. 293 with the correct values of inductance for the coils L-4, L-5, L-6 and L-7, and for the condensers, C-3, C-4 and C-5, oscillations of radio-frequency flow through L-4, the periodicity of which may be varied principally by C-3 and C-5. Connected in this manner, the vacuum valve becomes a generator of *sustained* oscillations which may interact with the incoming oscillations for the production of *"beat"* currents. For the maximum strength of signals, the coil L-4 bears a certain critical coupling to L-3, and the coupling between L-5 and L-6, also requires careful adjustment for steadiness and constancy.

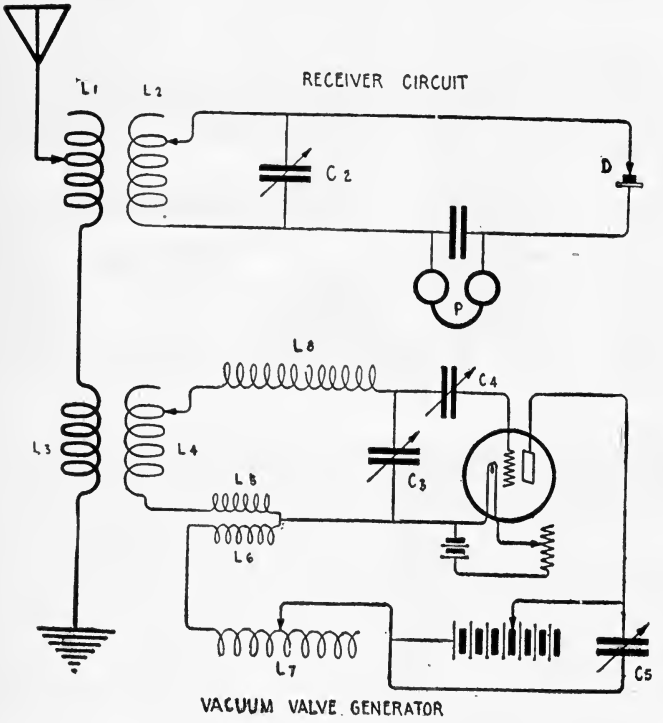

Fig. 293—The Vacuum Valve Heterodyne Receiver.

The "beat" current set up in the receiver windings L-2 and condenser C-2 is rectified by the crystal rectifier D, and made audible in the head telephone P.

Increased strength of signal is obtained by the use of a single three element vacuum valve or a triple valve amplifier in place of the crystal rectifier D.

Since the reception of very long wave lengths is involved in a system of this type, the inductances L-7 and L-8 are of the order of 90,000 microhenries each. It has been found possible to design a beat receiver tuner having fixed values of inductance throughout, the required changes in frequency for "heterodyning" being obtained by variable condensers.

225. Vacuum Valve as a Combined Detector, Amplifier and Beat Receiver. —Much of the record-breaking, long distance transmission effected, of late, is due to the vacuum valve being employed as a *combined detector and "beat" receiver.* One circuit of this type is shown in Fig. 294, wherein it will be observed that the *secondary* circuit, L-4, L-3, C-2 and L-5, can be placed in resonance with the tertiary circuit, L-6, L-7 and C-4, and when the filament is brought to the correct degree of incandescence by the rheostat R, the discharge of condenser C-4 through L-7 and L-6 starts the flow of undamped oscillations which are transferred to the secondary circuit through L-5 and L-6.

Due to the relaying action of the valve, the oscillations are repeated back to the grid (of the valve) through L-5 and L-6 and accordingly amplified.

Now if the antenna circuit, L-1, L-8 and L-2, is adjusted to the frequency of the incoming oscillations, and the secondary, as well as the tertiary circuit, adjusted to a slightly

different frequency of oscillation, a beat current is set up in the secondary circuit, which is amplified in the local telephone circuit by the charge placed upon the grid.

As explained by Armstrong, the incoming oscillations are transferred from the antenna circuit to the secondary circuit in the usual manner, and due to the repeating action of the valve, they are reproduced in the tertiary circuit, coupled back to the secondary circuit through the coupling transformer, L-5 and L-6, and re-enforced, all this taking place while the valve is generating oscillations locally. Simultaneously, beats are produced by the interaction of the local oscillations and the incoming oscillations, the effect being to alternately increase and decrease the amplitude of the oscillations in the complete system.

92

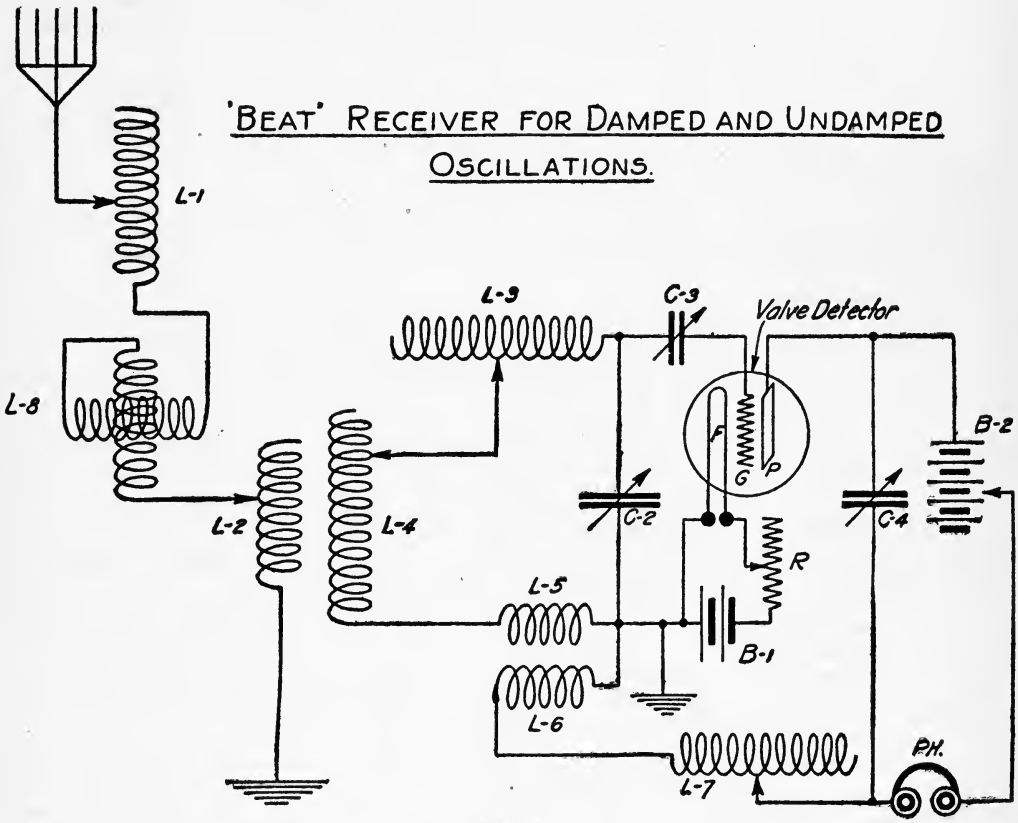

Fig. 72

Fig. 294—Complete Circuits of a Beat Receiver.

An increase in the amplitude of the grid oscillations, *increases the negative charge in the grid condenser, producing a decrease in the average value of the B-2 battery, and, therefore, a decrease in the telephone current,* but a decrease in the amplitude of the local oscillations allows some of the negative charge in the grid condenser to leak off and thereby permit an increase of the telephone current. The result of all this is the production of an alternating current of audio-frequency, which is practically a simple harmonic current.

(a) *Operation and Adjustment.* For wave lengths between 6,000 and 10,000 meters, the tuning for the secondary and tertiary circuits is done principally at the condensers, C-2 and C-4. Also the coupling between L-5 and L-6 must be carefully adjusted for maximum response. Careful regulation must be made of the voltage of the B-2 battery, which normally varies from 50 to 150 volts, depending upon the type of valve in use. The variometer inductance L-8 is a useful element of the antenna system for variation of its natural

frequency. It affords a close adjustment of inductance between the taps of the multi-point switch, and also permits variation of the frequency of the beat current.

It facilitates the preliminary adjustment of this receiver if access can be obtained to an accurate wave-meter. The wave-meter, shunted by a buzzer excitation circuit, is placed in inductive relation to the earth lead of the antenna system, and the signals at any particular wave length of the wave-meter are recorded on the receiving apparatus. In this manner a precalibration is effected, eliminating all guesswork. It is not difficult, however, to tune the apparatus to an undamped transmitter without a wave-meter, if certain precautions are observed. To begin with, the coil L-5 is placed in slight inductive relation to L-6. L-4 is placed about half way inside L-2 and the coil L-7, generally, is used at its maximum value. The condenser, C-3, is used at an exceedingly small value of capacity (very near to zero). The condensers, C-2 and C-4, are varied simultaneously in capacity until a peculiar "thumping" sound is heard in the head telephone. Near to this point the secondary and local telephone circuit are in oscillation and in resonance.

It is found that the vacuum valve having less than the maximum amount of exhaustion, oscillates far below the characteristic "blue glow" point. On the other hand, this glow is not evident, in the highly exhausted valves, regardless of the locally applied voltage. The correct adjustments throughout, in this type, are determined by experiment.

We may resume the complete process of tuning a receiving set of this type as follows: The antenna system is tuned to resonance with the incoming wave, but the secondary and tertiary circuits are set into oscillation at a slightly different frequency. Due to the interaction of the two currents, "beat currents" within the limits of audibility are produced and by variation of the local frequency, the pitch of the note in the head telephone may be varied over a considerable range. In manipulating this apparatus it is shown, during the reception of undamped oscillations, that proper adjustment has been attained when, if the variable elements (the coils and condensers) of either of the associated circuits of the complete tuner are altered in value, the pitch of the note changes accordingly. During the initial adjustment, and afterward the body of the manipulator must be kept at a considerable distance from the high potential ends of the tuning coils, otherwise the circuits will be thrown out of resonance and the signals will disappear.

With the apparatus of the foregoing type, signals have been received in New York City from a certain transmitting station at Honolulu at a distance of approximately 6,500 miles.

Dimensions of a receiving set of this type, adjustable to wave lengths up to 10,000 meters, which has been tried and tested experimentally, follow:

Referring to the diagram, Fig. 294, the high voltage battery, B-2, consists of from 50 to 100 miniature flashlight cells adjustable in steps of three at a time or preferably singly. The filament battery B-1 generally does not exceed four volts, although valves have been constructed having 12 volt filaments. The rheostat R has resistance varying from 10 to 20 ohms. It is essential that it be closely adjustable.

The inductance coil of the local telephone circuit, L-7, is 26 inches in length and 5½ inches in diameter, wound closely with No. 28 S. S. C. wire. The coil, L-6, is 6 inches in diameter by 6 inches in length, wound closely with No. 26 S. S. C. wire. The coil, L-5, is also 6 inches in length by 5½ inches in diameter and mounted so it can be placed in variable inductive relation with L-6. It is rarely necessary to place L-5 completely inside of L-6, but the coupler should be constructed to permit the coupling between the two coils to be adjusted over a fair range. The coil, L-5, is also wound with No. 26 S. S. C. wire.

The secondary winding of the receiving tuner, L-4, is 5 inches in diameter by 14 inches in length, covered with No. 28 S. S. C. wire. The secondary loading coil, L-3, has similar dimensions to the coil L-7, each of which may be wound on a cardboard form or hard rubber tube.

The secondary condenser, C-2, has maximum capacity of .0005 microfarads and preferably is constructed so that the zero position on the condenser scale actually represents zero capacity. The grid condenser, C-3, has the same capacity as the condenser, C-2. Both condensers should be fitted with handles at least 12 inches in length, in order that the constants of the circuit are not changed by the body of the manipulator. The condenser, C-4, should have a maximum capacity of .002 microfarads.

The primary winding, L-2, is 5½ inches in diameter by 12 inches in length, covered with No. 24 S. S. C. wire. It is somewhat difficult to give complete dimensions for the aerial tuning inductance, L-1, unless the inductance and the capacity of the antenna with which it is to be employed is known, but for receiving work with an aerial having a natural period of 450 meters, it may be 28 inches in length by 5½ inches in diameter, wound closely with

No. 22 S. S. C. wire. A tap-off should be taken every inch and led to the contacts of a multiple point switch. The leads to the switch from the tap-off should not be "bunched" but spaced as far as possible.

226. Oscillating Vacuum Valve Detector Circuits of the U. S. Navy.—A modified vacuum valve circuit for the reception of undamped oscillations by the production of "beats," is described by Dr. Austin in the Proceedings of the Institute of Radio Engineers. It is a duplicate of the circuit developed at the Naval Laboratory and employed at Naval stations throughout the United States and outlying possessions.

It will be noted from the diagram, Fig. 295, that a certain similarity exists between this circuit and the one described in the previous paragraph, both generating a "beat" current by the superposition of locally generated oscillations upon those of the incoming wave.

It is to be noted, first, that the two terminals of the secondary winding are connected to the grid and plate of the vacuum valve rather than to the grid and filament, the more usual connection; and, upon close examination, the secondary and tertiary circuits are found to be *electrostatically* and *electromagnetically* coupled through the condenser C-5 and head telephone P respectively. And, as in the former circuit, the incoming oscillations and the final audio-frequent currents are reinforced by repeating them back to the grid. Simultaneously, by adjustment of condensers, C-5, C-1 and C-2, the valve generates oscillations locally at a frequency determined by the constants of the secondary and tertiary circuits.

A novel feature of this circuit is the placing of the head telephone in shunt to the battery, B-2, rather than in series, but it is claimed by Dr. Austin that this connection results in a decrease of interference from atmospheric electricity.

An important adjunct to this system is the so-called *"sensitizing circuit,"* L-4, C-3. It is advanced by Dr. Austin that this circuit reduces the amplitude* of the local oscillations and therefore increases the strength of the received signals from three to four times. It also permits looser coupling between the primary and secondary circuits of the system, thus cutting down the interference of static.

A different and more plausible explanation is advanced by Armstrong for the action of the "sensitizing" circuit. According to this investigator, when the grid circuit of the vacuum valve is set into oscillation at a frequency differing from the incoming oscillations, the *reactance of the circuit to the local oscillations is zero, but the reactance and therefore the impedance to the incoming oscillations is considerable* and results in a loss of energy (due to the dissimilarity of the wave length adjustment of the primary and secondary circuits).

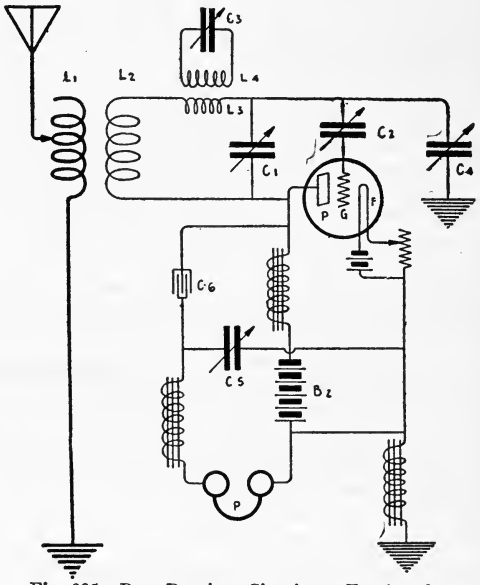

Fig. 295—Beat Receiver Circuits as Employed at U. S. Naval Stations.

Now the effect of coupling the "sensitizing" circuits to the grid circuit, is to give the latter two frequencies of oscillation differing by 1,000 to 1,500 cycles. By adjusting the system to oscillate at one of the resulting frequencies and having the other coincide with that of the incoming oscillations, *zero reactance* is obtained and the signal strength accordingly increased.

Owing to the severe discharges of atmospheric electricity experienced at the U. S. Naval Stations, it has been found necessary to connect the grid of the valve to earth through a small variable condenser; for, otherwise, communication between the naval stations could not be maintained.

No explanation of the function of the audio-frequency impedance coils, with the iron cores, has been advanced.

It is needless to say that many other circuits, when used in connection with the

*This is an important consideration in the operation of the heterodyne, namely, that the amplitude of the locally generated oscillations be carefully regulated for maximum response.

vacuum valves, have been found suitable to the reception of undamped oscillations; in fact, the majority of these circuits are equally well adapted for the reception of damped oscillations, but, as mentioned previously, the normal note of a spark transmitter is distorted when the maximum amplification is obtained.

(a) *G. E. Amplification Relays.* One system of connecting magnifying relays for the purpose of first *increasing the amplitude of the oscillations of radio-frequency* is set forth in Fig. 296, which is a method of connection particularly suited to the pliotron oscillators of the General Electric Company.

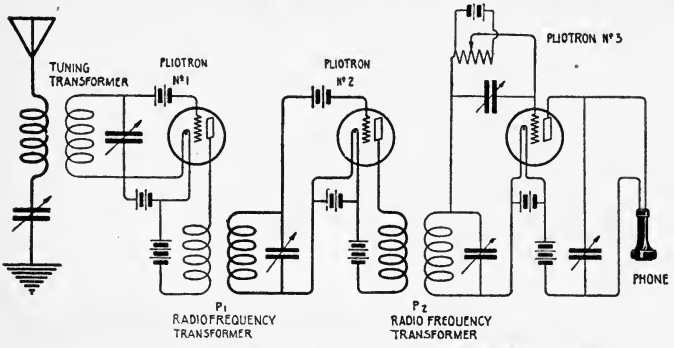

Fig. 296—Showing the General Electric Company's Cascade Connection of Electron Relays.

It is to be observed that the usual *grid condenser* is excluded from the circuit of all valves except the last one. The oscillations of radio-frequency are repeated from one bulb to the other, and in the last bulb they are made audible by being rectified, e. g., each group of oscillations places a charge in the grid condenser which has a relaying effect upon the battery circuit of bulb No. 3 (over the duration of a wave train), causing a single sound for each spark of the distant transmitter.

The foregoing explains the functioning of this circuit during the reception of damped oscillations, and it should be mentioned that this system for repeating radio-frequencies affords a marked degree of selectivity. For example, if each of the tuned circuits is adjusted to give response to the incoming signal which has 20 times the strength of an interfering signal and furthermore the desired signal is amplified ten times by each oscillation valve, it is self-evident that the interfering signal will practically disappear in the circuit of the last bulb.

The circuit of Fig. 296 can be made responsive to undamped oscillations if the tertiary circuit of valve No. 3 is shunted by an inductance and capacity. With this connection the amplified incoming oscillations interact with the locally generated oscillations and produce a beat current in the usual manner.

The student should note that the valves in Fig. 296 have a source of direct current electromotive force in series with the grid to fix definitely the potential of the latter in respect to the filament and also that the third valve has a source of E. M. F. in shunt to the grid condenser to prevent the accumulation of excessive potentials on the latter. This precaution is usually necessary with extremely highly exhausted vacuum valves.

The transformers, P-1 and P-2, shown in the diagram, are radio-frequency transformers shunted by variable condensers of small capacity for obtaining conditions of resonance.

227. The Goldschmidt Tone Wheel.—The mode of operation of this detector during the reception of undamped oscillations will be more readily understood by reviewing certain facts in connection with the functioning of the ordinary tikker. When the tikker interrupts (periodically) the secondary circuit of a receiving transformer tuned to a distant transmitter, the interruptions do not take place in synchrony with the incoming oscillations. The telephone condenser, therefore, receives an irregular charge which, at one instant, may be taken at the peak of the charge accumulated in the secondary condenser, and, at another instant, at a charge of lesser value, the final result being the production of a note in the telephone of irregular pitch which is not highly pleasing to the ear.

The Goldschmidt tone wheel overcomes this defect by converting the incoming oscillations into an audio-frequent current. To illustrate its mode of operation we may assume that signals are being received from the high-power station at Tuckerton, New Jersey, the normal wave length of which is 7,400 meters corresponding to an oscillation frequency of 40,540 cycles per second. Now, if a specially constructed mechanical circuit interrupter giving 40,540 interruptions per second is connected in the receiver circuit in place of the usual tikker, the positive half, let us say, of each successive cycle will be interrupted at the peak, such as A, B, C, D, E, etc., Fig. 297, and the current of successive negative halves only will be admitted to the receiving telephone. There will then pass per second through

the receiving telephone 40,540 pulses of direct current, but, owing to their rapid rate, these pulses do not individually affect the receiver diaphragm, except when the current is turned on and off.

If the circuit interrupter be driven to give, for example, 39,540 interruptions, the result will be that indicated in the curves, Fig. 298a (not scaled) where alternation A is interrupted directly at the peak, alternation B further down the peak, alternation C still further down, and so on.

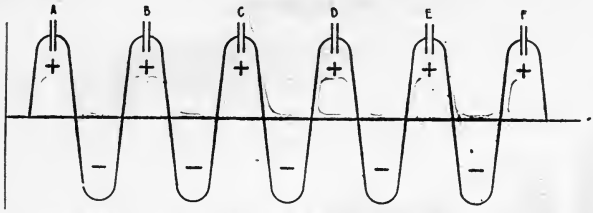

Fig. 297—Effect of the Goldschmidt Tone Wheel When Driven Synchronously.

Now, when a *positive alternation is interrupted* at the peak, the *full amount of negative current is admitted* to the head telephone and when a *negative alternation is interrupted* at the peak, the *full amount of the positive current* is admitted to the telephone (note also Fig. 298b). As the positive alternation is interrupted at points off the peak, a *smaller* amount of negative current and a *larger* amount of positive current will be admitted and the net result of this will be a decrease of telephone current as the zero axis (Fig. 298a) is approached.

When the interruption of the incoming oscillation takes place at the zero axis, equal amounts of positive and negative current (G and G-1, Fig. 298a) will be admitted to the telephone and there will be no deflection of the telephone diaphragm. As the interruptions continue beyond this point, positive current of gradually increasing strength will be admitted to the telephone until the full amount of positive current flows. There is thus seen to flow through the telephone, an *audio-frequent current* which rises, falls and reverses uniformly at a frequency which is the numerical difference of the interruptions of the tone wheel and the frequency of the incoming oscillations.

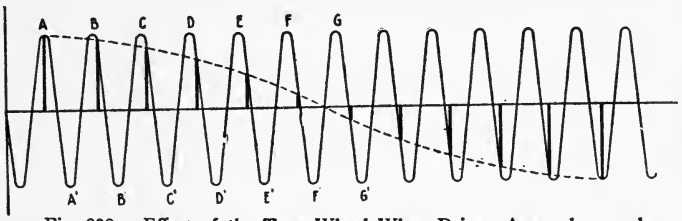

Fig. 298a—Effect of the Tone Wheel When Driven As-synchronously.

The resulting note in the telephone is found to have a musical pitch which can be varied over a range equivalent to frequencies lying between 200 and 3,000 cycles per second.

In the diagram, Fig. 298b (not scaled), the interruptions of the positive and negative incoming oscillations are shown by the curve A, D, and the amplitude of the telephone current by curve B, C. The peak of the dotted curve is the point at which a positive alternation is interrupted at the peak, and, as shown by the peak B, the audio-frequent current is negative and at a maximum. The peak D is the point where a negative alternation is interrupted at the peak and the telephone current, as shown by peak C, is seen to be positive and at a maximum. At all other points on the curve, the strength of the periodic telephone current will be less varying as the relative amounts of positive and negative current admitted to the telephone by the tone wheel.

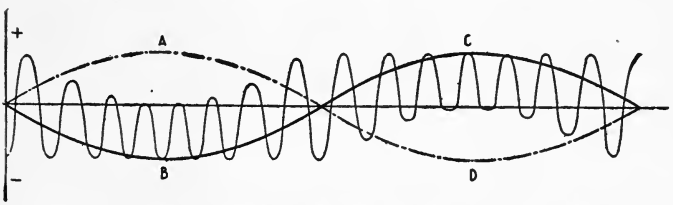

Fig. 298b—Showing Superposed Audio-frequent Current.

To produce a note of audio-frequency from the Tuckerton transmitter at its present wave length, a toothed wheel interrupter having 800 contact segments revolving approximately at 3,000 revolutions per minute would be required. This would interrupt the receiver circuit 39,450 times per second, which would give a note equal to the pitch of 1,000 per second.

The tone wheel is frequently termed a *frequency transformer* because it converts mechanically the oscillations of radio-frequency into current of audio-frequency. It is superior to the ordinary tikker, first, because it produces a musical pitch so highly desirable for aurul reception, and, second, it converts more energy of the incoming oscillations into useful sound than does the tikker.

A photograph of the Goldschmidt tone wheel appears in Fig. 299. The commutator disc of this detector is driven at speeds approximating 4,000 revolutions per minute.

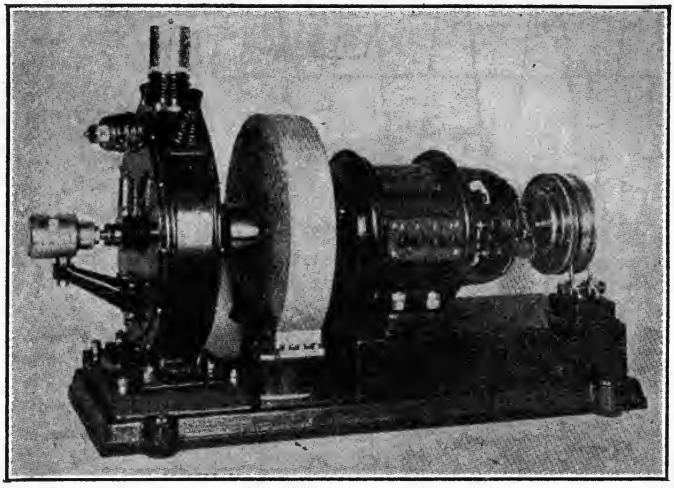

Fig. 299—The Tone Wheel Installed at the Tuckerton Station.

228. Marconi System for Reception of Undamped Oscillations.—The diagram of connections, Fig. 300, covers the systems for the reception of undamped oscillations, developed by Signor Marconi and H. J. Round.

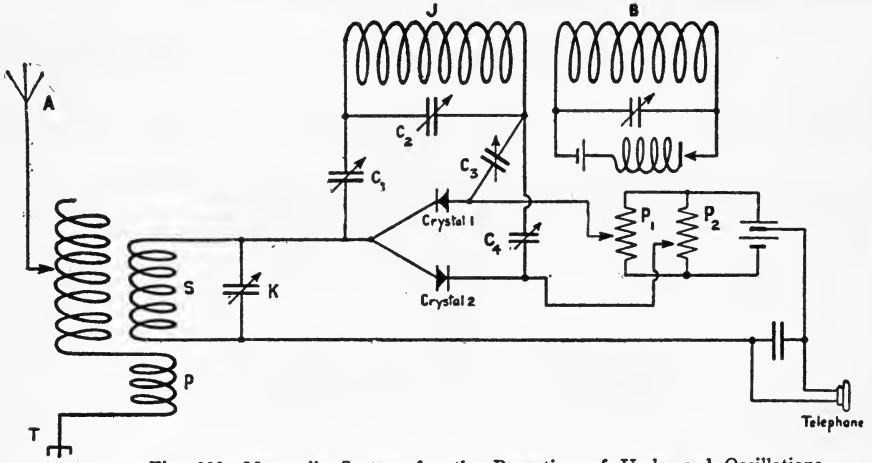

Fig. 300—Marconi's System for the Reception of Undamped Oscillations.

The circuit in general contains the fundamentals of the Marconi balanced crystal receiver, and, as explained in a previous paragraph, if crystal No. 1 and crystal No. 2 are *adjusted independently* to the maximum degree of sensitiveness, *they will produce practically equal and opposite effects,* resulting in the production of no sound in the head telephone. If potentiometer P-2, let us say, is adjusted so that crystal No. 2 is in a non-conductive state to signals, they will be received at moderate strength on crystal No. 1. However, very strong

impulses of static or atmospheric electricity will cause both crystals to become equally conductive resulting in the almost complete elimination of this interference.

To make this apparatus receptive to undamped oscillations, a circuit J, C-1, C-2, C-3, C-4, is provided, which is acted upon by the buzzer energized inductance B. The voltage set up in J alters the conductivity of the crystals in the following manner: Crystals No. 1 and No. 2 are adjusted to oppose one another in the usual manner, but the potentiometer voltage is adjusted so that only very strong signals can be recorded. Now if circuit B is adjusted to a very short wave, the electromotive force induced by the buzzer acts for short intervals on the two crystals, making them conductive for a brief period, and thereby releasing the energy stored up within the condenser K, in accordance. Condenser K is, of course, constantly charged by the undamped oscillations induced in the receiving aerial. If the groups of waves from the buzzer have a slightly different period or a submultiple of the initial frequency of the incoming oscillations, an audio-frequent current will flow in the head telephone. For example, if the frequency of the incoming oscillations is 50,000 cycles per second and the buzzer produces 4,900 groups of oscillations per second, the result will be a musical tone in the head telephones having a pitch equal to 1,000 per second.

These circuits have been used by Marconi and his assistants for the reception of signals over very great distances.

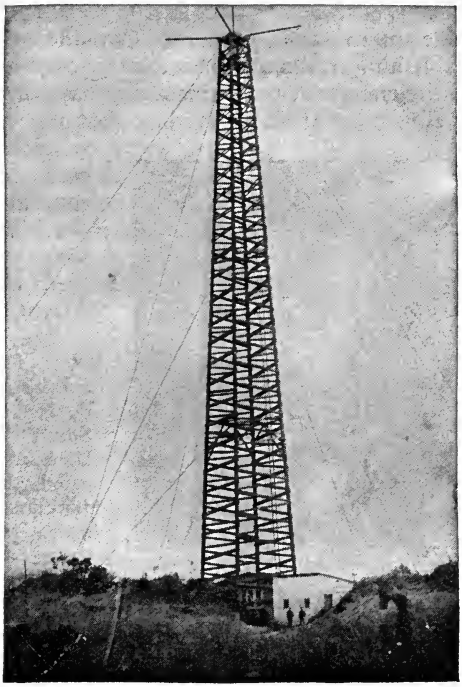

Fig. 300X—Wireless Station Erected at Cape Hatteras, N. C., U. S. A., in 1902.

PART XVI.

MARCONI TRANSOCEANIC RADIO TELEGRAPHY.

229. Marconi Development and General Considerations. 230. Marconi's Duplex System. 231. The Balancing Out Aerial. 232. Glace Bay-Clifden Stations. 233. Marconi Directional Aerial. 234. Marconi Transoceanic Stations. 235. Marconi Tubular Masts. 236. Radio-Frequency Circuits of the Damped Wave Transmitters. 237. Other U. S. High Power Stations. 238. Long Distance Receiving Sets. 239. Condensed List of High Power Stations.

229. **Marconi Development and General Considerations.**—The greater share of credit for establishing radio communication over extremely great distances, is directly due to the energetic and painstaking experimenters, Marconi and his staff of engineers. Realizing at an early date that the commercial utility of wireless telegraphy was not confined to ship to shore communication alone, Signor Marconi began the construction of powerful stations on both sides of the Atlantic as early as 1901.

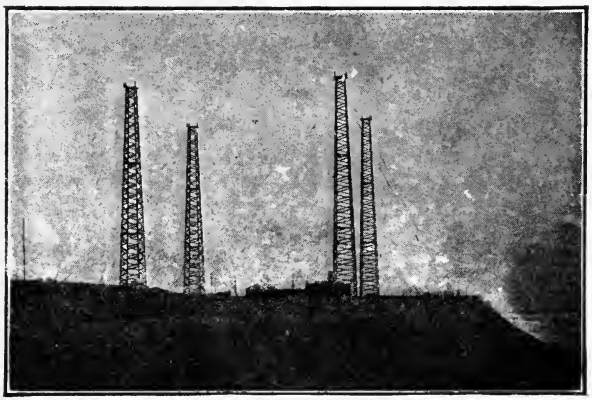

Fig. 300a—Early Marconi Station at Glace Bay, Nova Scotia.

The first high power stations for *trans-oceanic communication* were established at Poldhu, Cornwall, England, and South Wellsfleet, Cape Cod, U. S. A., but, as was anticipated, these stations were required solely for the dispatch of traffic to ships at great distances at sea and, therefore, other sites were selected as soon as possible at Glace Bay, Nova Scotia, and Clifden, Ireland.

A number of experiments were carried out at this station, seemingly insurmountable obstacles were overcome and, by continued application and research, an efficient transmitter and receiver were finally developed, which could be depended upon for 24-hour communication between these two points.

An unfortunate fire at Glace Bay, Nova Scotia, in 1909, delayed the further use of these stations for several months, but in the process of rebuilding a more efficient station was constructed, which has been in commercial service continually since that time.

The work of designing wireless stations such as the Marconi Company have erected for trans-oceanic work is essentially an enlargement of the work in connection with the sets of only a few kilowatts used for ship and shore stations. The engineer cannot, however, sit down with a slide rule and multiply the figures

for his calculations relating to the small stations by a hundred or so, and have as a result a station that will work over a long range. Many problems present themselves in a large radio installation which require much care and experimentation adequately to cope with the requirements of high power transmitters and which, in smaller sets, are of so little importance as to be practically negligible.

The reader, to assure himself that the construction of the high power stations is an engineering proposition of the highest order, need only consult the accompanying photographs showing in a very small part, the apparatus in use at certain of the Marconi Stations in the United States and abroad. Not only were the technical problems encountered in their construction broad in their scope and somewhat unusual, but the erection of masts and building, the transportation of materials, the furnishing of water supply, sanitation, the provision for power, the housing of employees, etc., each brought their individual problem which required most painstaking calculations and, in some cases, the provision of new means to overcome.

It is not adequately possible in the space at our disposal to go over the details of construction of the various Marconi high power stations, but a brief description of the equipment will be given, together with such additional information as may make clear the general plan of these stations and the method of operation.

As explained in Chapter XIV, both *continuous* and *discontinuous wave* systems are employed for long distance radio communication, and we should add that either system has its advantages. It cannot be denied that undamped oscillations give better *syntonic* effects at the receiver, but almost equal selectivity can be obtained by feebly damped oscillations.

Generally, undamped *wave transmitting apparatus* requires very careful adjustment and *is not continuously operative over extended periods* without very frequent attention, whereas the spark transmitters, even of 500 K. W. capacity, can function over very extended periods with only nominal care.

The general trend of development in the United States, however, seems to be in the direction of undamped wave transmitters which, more and more, are being put to commercial use. The final result of experimentation in this direction cannot be foretold, but the results already obtained seem to indicate that even *short wave undamped oscillation generators* may shortly be available.

230. Marconi's Duplex System.—A complete resume of the series of experiments which made trans-oceanic communication possible, would in itself constitute a volume of no small proportions, but one of the unique features of the Marconi high power stations, which has doubled the volume of traffic that can be handled from continent to continent, with a given set of stations and has contributed to the prevention of traffic interruption by outside interference, is Marconi's Duplex System, combined with his "balancing out" aerial.

The mode of operation of his Duplex System can perhaps be better understood by citing a particular example of commercial use. As already mentioned, the Marconi high power station at Glace Bay, Nova Scotia, transmits to another high power station at Clifden, Ireland, but in order that traffic may be dispatched in both directions simultaneously additional receiving stations have been erected on both sides of the Atlantic, a few miles distant from either transmitting station. This separation of stations would not in itself prevent interference between the transmitter and receiver, but by combining this plan with the balancing out aerials interference is wholly prevented.

The *transmitter* at Glace Bay, Nova Scotia, is approximately 30 miles north of the receiving station located at Louisburg, Nova Scotia, while the receiving station for the opposite side is at Letterfrack, Ireland, approximately 12 miles north of the transmitter at Clifden, Ireland.

With this separation of transmitter and receiver, Glace Bay station, for instance, may dispatch messages to Letterfrack freely and not interfere with Louisburg station receiving from Clifden, Ireland. Not only may this system be used for simultaneous transmission in both directions, but it can be used as a *"break-in" system* as well, permitting the receiv-

ing operator to break in on the sending operator, asking for the repetition of a word, a letter or a sentence if necessary.

Now that the general plan of the Duplex System has been explained, the reader should refer to the diagram, Fig. 301, showing in a more detailed manner the operation of the Duplex System in a specific instance, viz., as employed on the Glace Bay-Clifden route.

The 150 K. W. transmitter at Glace Bay, Nova Scotia, connected to aerial A, B, is designated as station No. 1. Operated at the wave length of 8,000 meters, this station transmits to Letterfrack, Ireland, direct, designated as station No. 2.

The transmitter at Clifden, station No. 4, transmits to Louisburg station No. 3 at the wave length of 5,500 meters.

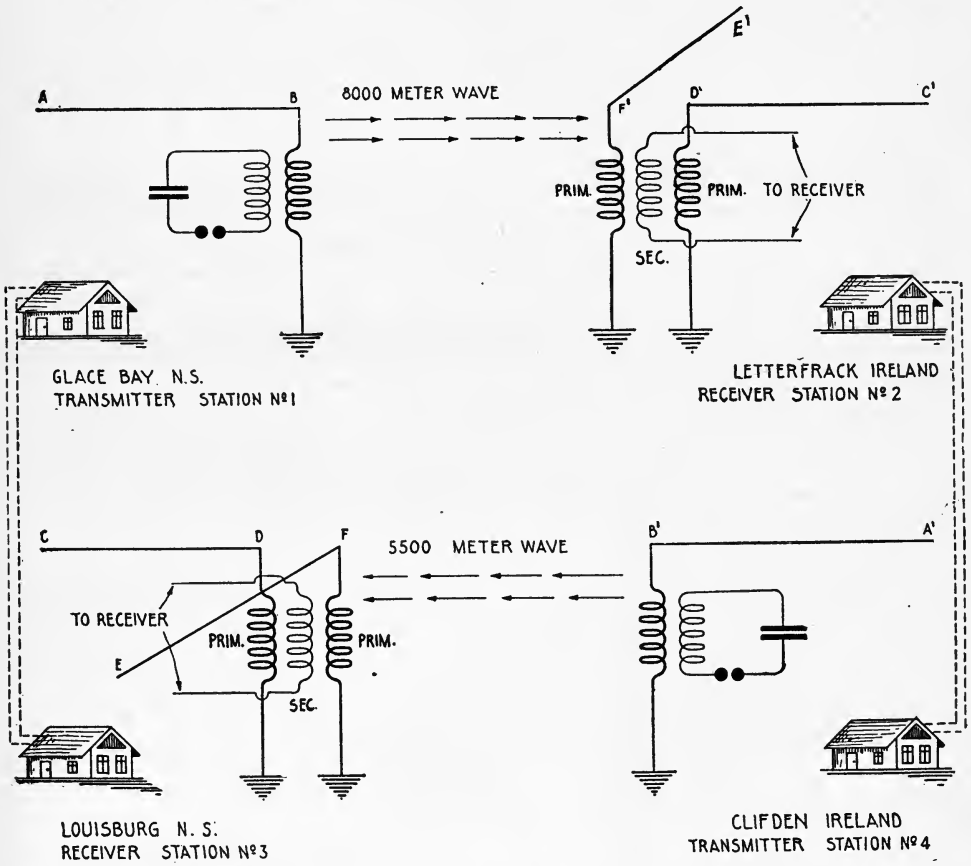

Fig. 301—Marconi's Duplex High Power Transmitter Scheme With Balancing Out Aerials.

Stations No. 1 and No. 3 are connected by wire line, similarly, stations No. 2 and No. 4. The sending operator for station No. 1 is located at station No. 3, the transmitter at No. 1 being actuated by a manually operated key or automatic sender, the circuit of which extends over the wire line connecting the two stations.

Similar arrangements are in use on the opposite side of the Atlantic, the transmitter at Clifden, Ireland, being controlled by an operator stationed at Letterfrack. Both the transmitting and the receiving operators may thus work side by side, traffic being dispatched freely in both directions. But to positively insure against interruptions of service, the transmitting stations are equipped with receiving sets, to be employed in event of a breakdown at the regularly appointed receiving stations.*

*The general scheme and mode of operation of the high power stations herein described is that originally planned. This is not necessarily the way these stations are now operated. Changed conditions due to the European war have required some re-arrangement of the original plan and method.

231. The Balancing Out Aerial.—It will be well to understand that although transmitting stations No. 1 and No. 4, Fig. 301, operate at wave lengths of 8,000 meters and 5,500 meters respectively, some of the energy of the 8,000 meter wave is apt to induce oscillations of its own frequency in the receiving aerial, C, D, station No. 3, when the latter is adjusted to the wave length of 5,500 meters.

In the same manner, station No. 4 would induce oscillations in the receiving aerial at No. 3, setting up no small amount of interference, were it not for the use of the balancing out aerials, E, F, and E^1 F^1 at stations No. 3 and No. 2, respectively.

These balancing aerials are generally located at a right angle to the main receiving aerial in such a way as to receive the *maximum induction* from the nearby transmitter and the *minimum induction* from the far distant transmitter.

The circuit of the balancing aerial is *tuned to the interfering wave and inductively opposed to the interfering oscillations* induced in the main receiving aerial at the secondary winding. Then by proper adjustment of coupling and phase relation of currents, the energy induced by the interfering wave is electromagnetically *balanced out,* leaving the main receiver aerial free to receive from the far distant transmitter.*

In the diagram, Fig. 301, aerial C, D, for instance, at station No. 3, is favorably disposed for the reception of signals from aerial A^1, B^1, and the balancing aerial E, F, receives the maximum induction from A, B, and the minimum from A^1 B^1.

Similarly, balancing aerial E^1, F^1, receives the maximum induction from A^1, B^1, and the minimum induction from A, B. If oscillations be induced in C, D, by the 8,000 meter wave from A, B, and thereby cause interference to the reception of signals at the wave length of 5,500 meters from A^1, B^1, the balancing aerial E, F, is tuned to 8,000 meters and its circuit inductively opposed to the secondary of the tuner connected to C, D. Proper adjustment of coupling and decrement permits the oscillations (induced by the 8,000-meter wave in each) to be brought opposite in phase, and the interfering signals thus balanced out, signals being received all the while from A^1, B^1.

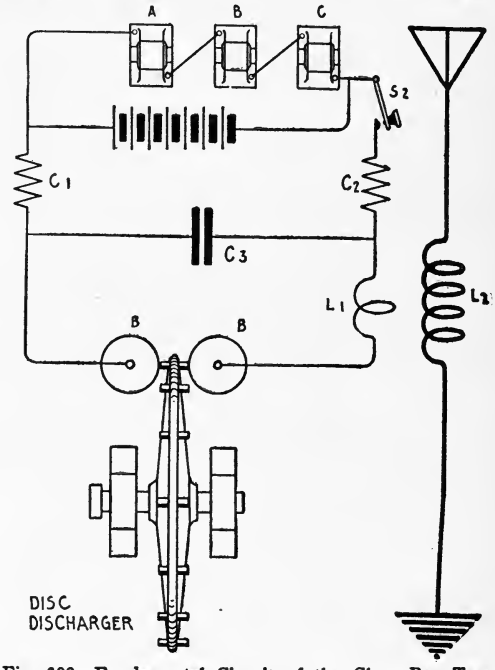

Fig. 302—Fundamental Circuit of the Glace Bay Type of Transmitter.

In practice, this system has been found to work well, preventing the transmitter and receiver from interfering with each other, although separated no more than 8 or 10 miles.

232. Glace Bay-Clifden Stations.—We have already intimated that the installation and the subsequent successful operation of the Glace Bay and Clifden high power stations opened up a new era in long-distance communication. In view of the pioneer work performed at these two points, it may be of interest to describe fundamentally the transmitters in use.

Contrary to previous installations, the condensers were charged by 14,000 volts direct current, the source of which was a *battery of* 6,000 *storage cells* connected in series. These batteries in turn are charged by three 5,000-volt generators (A, B, C, Fig. 302), of very special construction, connected in series and then to the terminals of the battery.

As will be seen from the fundamental diagram, Fig. 302, the energy stored up in the condenser C-3 is discharged through the usual oscillation transformer and *Marconi's studded disc discharger.*

This discharger consists of a large steel disc several feet in diameter, with sparking electrodes mounted thereon and which pass closely to the fixed electrodes B, B.

*See Section I Appendix.

The electrodes B, B, in reality revolve slowly, and therefore present constantly cooled surfaces to the path of the spark discharge. Protective chokes C-1 and C-2 protect the generator from the discharge of the condenser.

The principal advantage of the disc discharger is the *quenching effect* obtained when the disc is driven at a certain velocity. This prevents the re-transference of energy to the spark gap circuit, and in consequence, the antenna oscillations *have a decrement as low as .03 per complete cycle.* In addition a spark or group note of distinct musical pitch is obtained which has been found extremely desirable for aural reception through atmospheric electricity.

The *high potential condensers* at both of these stations are of unusual construction and dimensions. Consisting of a number of large steel plates suspended from the ceiling on special insulators, they are separated sufficiently to prevent the spark discharging between plates, and the required capacity is found in connecting a large number of such plates in parallel.

Beyond the size of this condenser, *the oscillation transformer* comes in for attention, principally because of its dimensions. The primary winding has but two turns, consisting of a specially constructed cable, one foot in diameter. Owing to the large amounts of power in use, a cable of these dimensions is positively required, and good surface conductivity is among the chief considerations.

Signalling is not effected by interruption of the primary circuit as in small-sized Marconi transmitters. In these sets, specially constructed high voltage relay switches (S-2), in turn controlled by a small telegraph key and source of D. C. current, interrupt the high voltage circuit from the battery to the condenser. Arcing is prevented by forcing an extra heavy air blast on the contact points by specially designed motor blowers.

The receiving apparatus at these stations may either consist of a *Marconi balanced crystal receiver,* employing the *carborundum rectifier,* or a set of Fleming vacuum tubes of special design, type and construction. Through a set of microphonic relays, connected in cascade, the signals may be amplified considerably and either deciphered in an ordinary ear telephone or the pulsations of current may be indented on the wax records of a dictaphone.

233. Marconi Directional Aerial.—The great success of Signor Marconi's Trans-oceanic system is in no small measure due to the use of the *horizontal directional aerial.** Fully convinced by a series of quantitative experiments that the flat top aerials radiate more freely in the direction opposite to which the free end points, particularly if the length of the flat top exceeds the length of the vertical portion by four or five times, Signor Marconi decided that the adoption of this aerial would not only permit the transmission of messages over great distances with small powers but also on account of its directional properties would prevent a considerable amount of interference to the operation of other stations.

In the same series of experiments, it was determined that a *flat top aerial receives with greater intensity when the free end points in the direction opposite to the free end of the transmitter aerial.* Irrespective of its selective directional properties, a horizontal aerial of given capacity and inductance for any required wave length, is less expensive to erect than a vertical aerial of similar electrical dimensions; hence, from this consideration alone, the flat top aerial is the one that would be adopted.

In order to radiate the energy of a 300 K. W. transmitter, the aerial should have a fundamental wave length of at least 6,000 meters; in fact the greatest distances are covered when such aerials radiate near to their fundamental wave length.

The great Marconi station at New Brunswick, New Jersey, U. S. A., for example, has an aerial of 32 wires connected in parallel, 5,000 feet in length. The aerial is supported by 12 tubular steel masts, 400 feet in height, arranged in two rows of six each. The fundamental wave length is approximately 8,000 meters, but the initial transmitting experiments were carried on at the wave length of 15,000 meters.

The receiving aerial for this station at Belmar, New Jersey, consists of two wires 6,000 feet in length, suspended on six tubular masts, 400 feet in height. The aerial has a general direction favorable for reception from the giant transmitting station at Carnarvon, Wales.

234. Marconi Transoceanic Stations.—By far the greater number of high power radio stations here and abroad have been designed and erected by the

*An explanation of the cause of the unsymmetrical radiation of an inverted L aerial appears in Page 167 of Fleming's Elementary Manual of Radio Telegraphy.

Marconi Company. *In fact, their stations only have maintained a continuous operating schedule from day to day, from continent to continent.* Individual concerns may have carried out spectacular experiments here and there, but nothing has been evolved by them that would tend to make long-distance communication a success commercially. The mere fact that a message may, for instance, be sent across the ocean by a low-powered transmitter and received on a small aerial at certain hours of the day is no indication that such equipment could be used for continuous 24-hour service, because experiment reveals that very large powers are required for continuous operation, when the sender and receiver are 3,000 miles apart.

Those who are familiar with the great globe-girdling scheme of the Marconi Company cannot help but be impressed with the stupendous undertaking involved in the construction of their high power stations, for not only is the task of designing the apparatus, buildings and power machinery one of extraordinary undertaking, but the actual installation of such has, in many instances, called for painstaking labors and effort largely due to the location, the nature of the soil, and the topography of the surrounding country.

In view of the universal interest manifested by students of radio in behalf of high power radio stations of the Marconi Company, a brief description of their equipment will be presented, together with such additional information, as will make clear the general plan and mode of operation. First let it be explained that although these stations could all be made intercommunicative, it is more usual to construct a pair of stations to cover a specific route or to join together two continents only.

With the idea in view of showing which of these stations was intended for communication with the other, they shall be grouped into *"radio circuits"* or routes, as follows:

CIRCUIT NO. 1.

Stations separated about 30 miles.	Glace Bay, Nova Scotia...transmits to...Letterfrack, Ireland, Louisburg, Nova Scotia...receives from...Clifden, Ireland.	Stations separated about 12 miles.

Since the apparatus for the Glace Bay station has been very briefly described in paragraphs 274 and 275, it will not be gone over again, except to mention that the Duplex System has been installed and thoroughly tested. Because these two stations established the first successful trans-oceanic commercial radio service, they are purposely grouped at the head of the list.

CIRCUIT NO. 2.

Stations separated about 50 miles.	New Brunswick, N. J., U. S. A.....transmits to.... Towyne, Wales, Great Britain, Belmar, N. J., U. S. A....receives from...Carnarvon, Wales.	Stations separated about 62 miles.

The *transmitting station* at New Brunswick is of 300 K. W. capacity and can be operated at various wave lengths from 7,000 to 15,000 meters. Power is taken in the station from a commercial power house at 1,100 volts, 3 phase 60 cycle alternating current, stepped down to 440 volts and led to the terminals of a 60 cycle, 440-volt 3 phase 550 H. P. motor, which drives a 300 K. W. 120 cycle generator.

The current is led from the generators to a bank of high voltage transformers, the secondaries of which may be connected in series or in parallel according to the power required.

In the usual manner the current from these transformers charges a large bank of high voltage oil plate condensers which, in turn, discharge through an oscillation transformer and rotary disc discharger of uncommon proportions. As in the Glace Bay Station, the circuit from the transformer secondaries to the condenser is interrupted by a specially designed set of high tension relay keys which, in turn, are actuated by a small sending key and a source of direct current.

Arcing at the contacts of the main signalling key is prevented by a heavy blast of air forced directly at the contact points by specially designed motor blowers. The advantages

derived in interrupting of the high voltage current, lies in that it permits 300 K. W. to be handled at various speeds of transmission up to 100 words per minute without error.

A more detailed description of certain apparatus of the circuits of radio frequency for the New Brunswick station and others with like equipment (damped wave apparatus) will be given in paragraph 236.

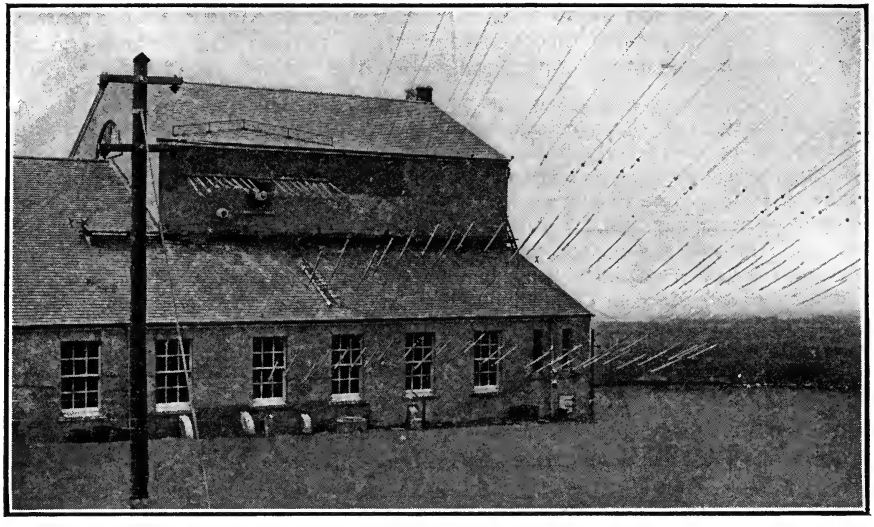

Fig. 303—Power House of the Trans-Atlantic Marconi Station at Carnarvon, Wales.

The *transmitting aerial* at the New Brunswick station is of the inverted L type, consisting of 32 wires with a flat top approximately 5,000 feet in length. It is supported on two rows of steel tubular masts (6 masts in each row), which are approximately 400 feet in height. The two rows of masts are separated about 250 feet.

in length, consisting of 2 wires supportedin length, consisting of 2 wires supported on six tubular masts, each 400 feet in height.

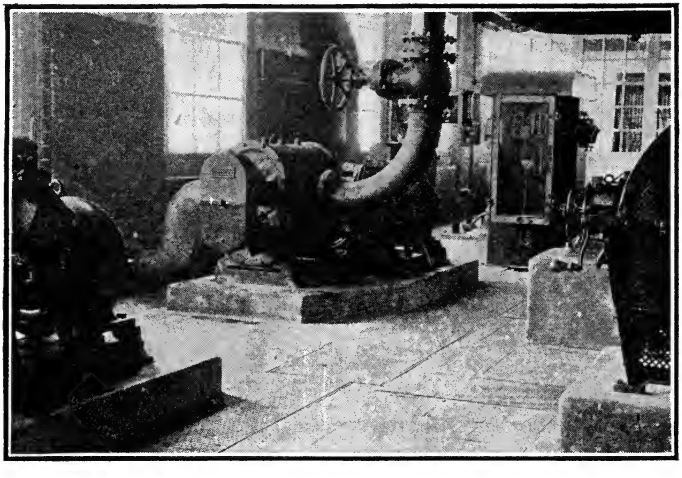

Fig. 304—Motor Blowers at Carnarvon Station.

The transmitter at Carnarvon, Wales is substantially a duplicate of the New Brunswick transmitter, the source of power being a 300 K. W., 150 cycle motor generator

with step-up transformers, oil condensers, etc. Of late, a 150 K. W. timed spark discharger, excited by 5,000 volts continuous current, has been employed as well, and with which particularly successful results have been obtained. Operated usually at the wave length of 10,000 meters, daylight communication has been established with the U. S. A., the strength of signals being equal to that obtained from other foreign stations of much greater power. (For a more detailed explanation of timed spark discharger sets see paragraph 219.)

Some idea of the construction of the Marconi high power stations may be obtained from the following description:

The *power house* of the transmitting section of the Wales Transoceanic station at Carnarvon, Wales, is shown in Fig. 303, wherein the aerial and ground leads of the great antenna which transmits messages to the Belmar, New Jersey, station appear prominently in the foreground. This building measures approximately 100 feet by 83 feet, and is divided into three sections, known as the *main machinery hall,* the *annex,* and the *extension.* The

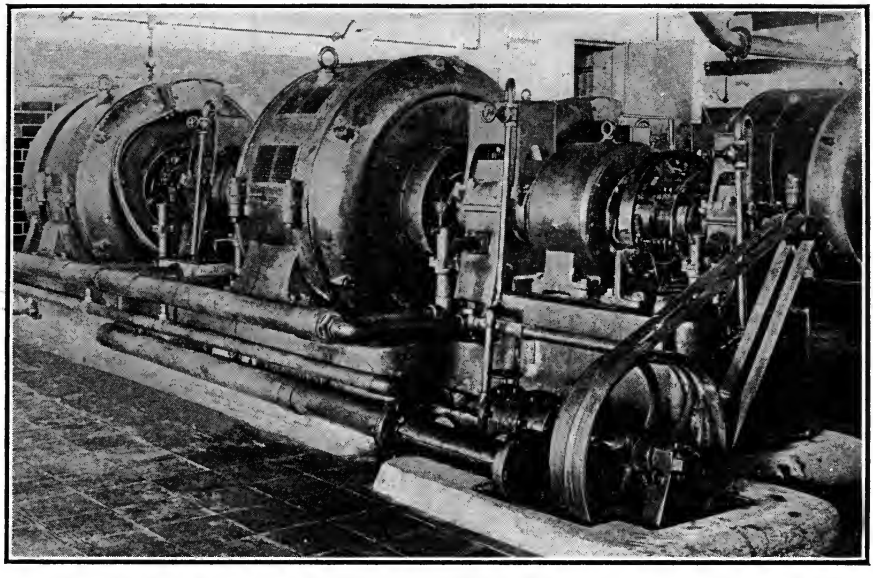

Fig. 305—Three Hundred Kilowatt 150 Cycle Generators at Carnarvon Station.

transmitting sets, switchboard, transformer room, stores, offices and emergency operating room are located in the main machinery hall. The auxiliary plant is placed in the annex, consisting essentially of D. C. generators, electrically driven blowers and ventilating fans, and some small motor generator sets used in the signalling circuit. An office for the engineers and a fitting shop are also provided for in the annex. The extension is devoted entirely to experimental apparatus. All trans-Atlantic wireless messages transmitted from this station will be handled automatically from London, through the receiving section at Towyn, sixty-two miles away, and received at Belmar for automatic transmission to New York. This station is therefore of great interest to Americans as the communicating links with the New Jersey stations in the Marconi globe-girdling chain.

In Fig. 304 are shown the blowers which furnish air under considerable pressure, to blow out the spark at the disc discharger and keep the disc elements cooled. These are also used to blow out the sparks at the signalling switches which relay the dots and dashes to the aerial wires.

In Fig. 305, the 300 *K. W.* 150 *cycle motor generators at the Carnarvon station* are shown as installed ready for use. In the photograph, Fig. 306, are shown the signalling *motor generators* and the *disc motor starters* at Carnarvon. One of each is a spare. The signalling motor generator supplies current to work the high speed relay switches through which the station is enabled to transmit from a distant operating station at the rate of 100 words a minute. The motor starters shown on the right control the 75 H. P. motors, which drive the

disc discharger when it is disconnected from the main generator for as-synchronous working.

Photograph, Fig. 307, gives a view of the *high voltage transformers* and *primary inductances.* All the current from the generators passes through the transformers, where it is stepped up to a voltage sufficient to charge the condensers. The *low frequency inductances* shown to the right of the drawing permit a large range of adjustment in the primary power circuits, thereby permitting the radiated energy to be controlled in accordance with the requirements. Fig. 308 shows the switchboard at the New Brunswick, New Jersey, station. This board controls the generator circuits, blower machinery and all controlling appliances within the station.

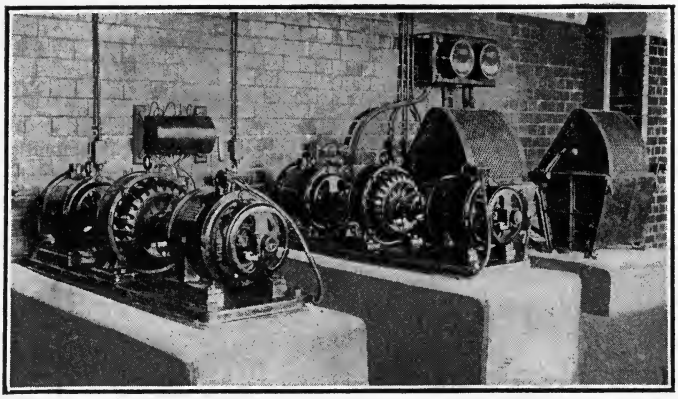

Fig. 306—Special Signalling Generators at Carnarvon Station.

The receiving station at Belmar, New Jersey, is completely equipped with a *Marconi balanced crystal receiving set, Brown amplifying relays,* a *balancing out aerial* for eliminating interference, *dictaphone receivers,* and a set of telegraphic instruments for connection with the land line telegraph and telephone companies. These transmitting and receiving stations not only have the necessary buildings for the housing of the apparatus, but hotels and individual dwellings are supplied for the employees as well.

CIRCUIT NO. 3.

Stations separated about 30 miles.	Marion, Mass..transmits to.....Naerboe, Norway, Chatham, Mass..receives from..Stavanger,* Norway.	Stations separated about 30 miles.

At the writing of this volume, this group of stations are under construction and very nearly completed. They will be used for 24-hour commercial working and will permit communication with Northern European countries, independent of all existing routes, obviating the necessity for a number of intermediate relay points.

The transmitter at Marion will be a 150 K. W. Marconi timed-spark continuous wave generator, energized by a 300 K. W. 5,000 volt D. C. generator. The transmitter at Stavanger will be substantially a duplicate, with ultimate capacity of 300 K. W. Since they have been found the most economical and practical for the purpose, the aerials at these stations are supported by tubular steel masts. As usual, the stations are constructed for Duplex working, Marion and Chatham as well as Stavanger and Naerboe stations, being connected together by land line control. These stations will be placed in commercial operation within a very short time.

CIRCUIT NO. 4.

Stations separated about 40 miles.	Bolinas, Calif....transmits to...Koko Head, Hawaiian Islands, Marshalls, Calif....receives from...Kahuku, Hawaiian Islands.	Stations separated about 25 miles.

CIRCUIT NO. 5.

Stations separated about 60 miles.	Kahuku, Hawaiian Islands...transmits to...Funabashi, Japan, Koko Head, Hawaiian Islands,..receives from... Funabashi, Japan.	

*Station is located at Hinna.

Because the transmitter at Kahuku is duplexed for simultaneous transmission to Japan and the U. S. A., the two circuits, No. 4 and No. 5, have been grouped together. Beginning with the Bolinas station, the transmitter is of 300 K. W. capacity, current for its operation being supplied by duplicate 500 H. P. steam turbine driven generators delivering current at 180 cycles per second. In the usual manner, this current is stepped up by closed core transformers to approximately 50,000 volts and employed to charge a bank of high voltage oil plate condensers. Although normally operated at from 75 to 150 K. W. the full 300 K. W. can be employed whenever necessary.

The aerial for receiving from Bolinas, Cal., is nearly a mile in length erected on two rows of tubular steel masts in the usual manner. The receiving aerial at Marshalls, California, has 7 masts, each of which are 330 feet in height.

The receiving station at Koko Head, Hawaiian Islands, has two distinct receiving aerials, together with balancing out aerials, one being employed for reception from Bolinas, Calif., and the other from Funabashi, Japan.

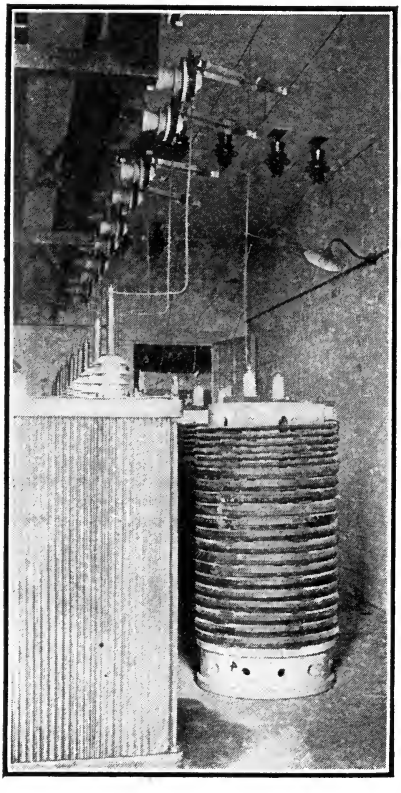

Fig. 307—Bank of High Voltage Transformers at Carnarvon Station.

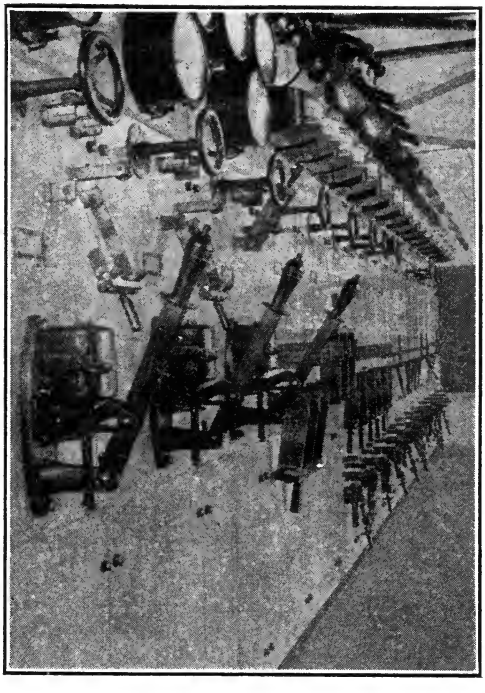

Fig. 308—The Switchboard of the New Brunswick High Power Transoceanic Station.

The *aerial for receiving from Bolinas* extends southwestward from the operating house and is carried on five 330 feet masts to an anchorage on the beach. The aerial for reception from Japan extends from the operating room almost due east. The first two masts for this aerial are of the standard sectional type 430 feet in height; the first is on level ground and the second is on the hillside. From this point the aerial makes a long span of over 2,000 feet to the top edge of Koko Head (an extinct volcano) at an elevation of 1,194 feet above the sea level; here there is not enough room to erect a sectional mast, only about 40 square feet being available for a self-supporting structural tower 150 feet in height. The tail end anchorage for this aerial is far down the volcano on the inside of the crater. The balancing aerial, which is employed for both receiving aerials, is erected on self-supporting towers, each of which is 100 feet high. All this will be clear from the diagram, Fig. 309, wherein a

complete lay-out of the receiving station at Koko Head appears showing the relative positions of the balancing out aerial, the location of buildings, etc. It is to be noted that the balancing out aerial is 5,700 feet in length, and is arranged to be favorable for the absorption of energy from the two transmitting stations at Kahuku.

Because it is duplexed for the simultaneous transmission of messages to Japan and the United States, especial interest attaches to the Marconi station at Kahuku, Island of Oahu, Hawaiian Islands. Not only is this station fitted with two 300 kilowatt transmitting sets but a *third emergency set* has been installed as well, which in event of breakdown can be connected either to the Japan or the United States aerial.

The general layout of the antennæ and buildings at Kahuku is shown in the diagram, Fig. 310, wherein it will be noted that the free end of these aerials point in a direction

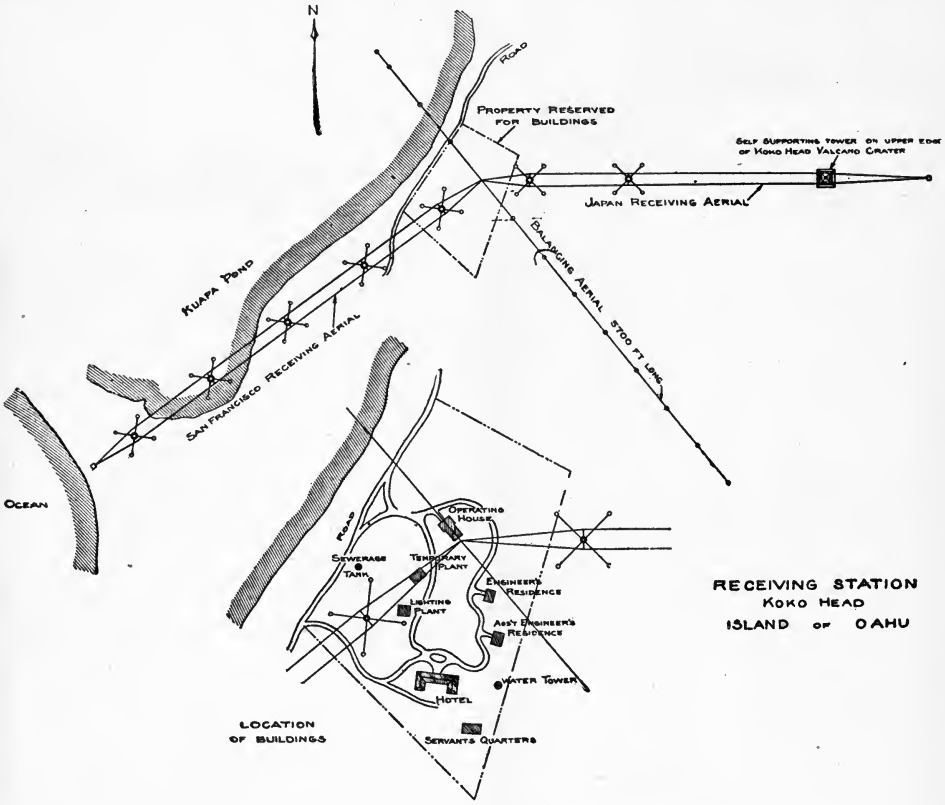

Fig. 309—Plan and General Layout of the Receiving Aerials at Koko Head, Hawaiian Islands.

favorable for the particular continent with which communication is to be established, being designated as the "Japan" aerial and the "San Francisco" aerial.

From the *power house* as a center, *the California transmitting aerial* extends southwestward, supported by twelve masts, 325 feet in height; the Japan aerial extends to the southeast, supported by fourteen masts, 475 feet in height. These masts are the largest that have been yet constructed on the Marconi system of sectional cylinders. The power house consists of boiler room, engine room and condenser room. The boilers are oil-fired and will feed three 500 H. P. turbines, which drive the special 300 K. W. alternators and Marconi disc discharger.

The necessary condenser capacity for all three transmitting sets is found in 768 large oil tank type condensers, which are conveniently arranged for uniform distribution of current to all connecting bus bars.

The automatic sending and receiving apparatus plays an important part in the service between the Occident and the Orient. The sending machine consists of a Wheatstone automatic transmitter and special perforator, which makes possible the transmission of more

than 100 words a minute. Under the automatic system, ten or 100 messages can be filed at the same time at the office of the Marconi Company in Honolulu. They will be distributed among the necessary number of operators and the dots and dashes punched in a paper tape by a typewriter perforator. This tape is fed into an automatic sender and the signals conveyed by land line to Kahuku, where the dots and dashes actuate a high voltage sending key, automatically energizing the aerial instantaneously with the feeding of the tape in the station, thirty miles or more away. At the transmitting station the dots and dashes operate the magnets of the high power sending key in the main energy circuits and the signals are

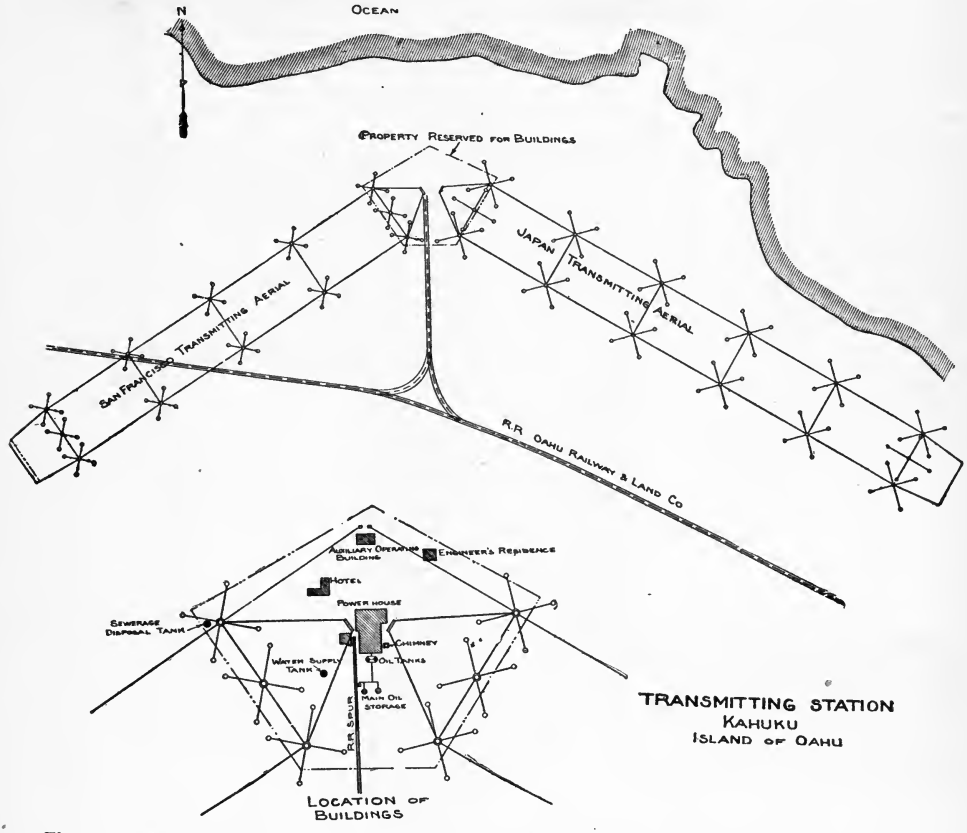

Fig. 310—General Plans of Transmitting Aerials at Marconi Station, Kahuku, Hawaiian Islands.

flashed to whichever destination the message calls for—either Marshalls or Funabashi. If the message is destined for Marshalls it will be received on a specially constructed dictaphone machine, each cylinder, as soon as it is indented with dots and dashes, being handed to an operator, who transcribes it into a typewritten message by means of a reproducing dictaphone machine, running at normal speed.

The Imperial Japanese Government station at Funabashi, Japan, is equipped with a 200 K. W. quenched spark transmitter, but complete details of the equipment are not yet available.

235. Marconi Tubular Masts.—One of the most interesting features of the original construction work at the Marconi high power stations was the erection of the steel tubular masts, the successive stages of erection being shown in Figs. 311, 312, 313, 314 and 315. The mast is made up of steel cylinders (Fig. 311), constructed in quarter sections, flanged vertically and horizontally and secured together by bolts stayed with steel cables. These stand in a concrete foundation. Surmounting the main steel column was a wooden top mast, the lower part of which is squared and set in square openings in the plates between

Fig. 311—Showing Steel Semi-Cylinders for the Marconi Tubular Mast.

the steel cylinders. The hoisting arms attached to the upper end were fitted with blocks and hoisting cables. Attached to these arms were chain hoists supporting a square wooden cage (Fig. 312) for the workmen, which was lowered or raised as the demands of the work required while the sections were being bolted together.

The *wooden topmast was the keynote* of this novel system of construction, operating like a man who pulls himself up by his bootstraps. The lower half of this topmast is of square section and is guided by a square hole in the diaphragm plates between each section. The topmast was fitted with a set of hoisting arms which carried blocks through which reaved the material hoisting ropes. A square wooden cage was suspended from the hoisting arms by four chain hoists so that the workmen in it could move themselves up and down to bolt the sections together. This is more clearly shown in Fig. 314.

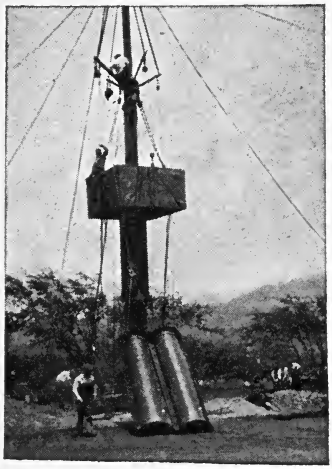

Fig. 312—Showing Workmen's Cage Which is Carried to the Top During the Process of Erection.

Assume that two cylinders have been bolted to the bed plate, the mast rising through the center. The sections of the third cylinder were raised by a steam winch and bolted in place by the workmen. Then a heavy flexible steel rope was temporarily anchored at the top of this last cylinder. Attached to the top of the steel section, this cable led down inside the cylinders and around a wheel in the foot of the wooden topmast; then it was carried up again on the other side and around a sheave to the top of the steel, thence to the winch. By pulling on this rope the topmast was raised the length of one cylinder and pinned through holes in both steel and wooden masts. With the addition of a new cylinder, the topmast was raised again, the pin supporting it until this was brought about (Fig. 313). The stays were attached at the required points as the erection of the mast progressed.

The stays, by means of which each mast is supported, are made of heavy plough steel cable, possessing great tensile strength. For each mast thousands of feet of this cable were used, great care being taken to see that the elastic extension of these stays was not so great as to result in the vibration of the mast during heavy winds. It was essential to break each stay into short lengths connected with great porcelain insulators in order that the electrical energy might not be absorbed, led to the earth by the stays and lost for purpose of wireless operation. For all connections at the masts, insulators and anchorages, special bridge sockets were designed. This did away with the necessity for splicing and permitted a perfect and straight pull, thereby developing the strength of the cable. Heavy concrete blocks were used as anchorages for the stays. The completed mast is shown in Fig. 315.

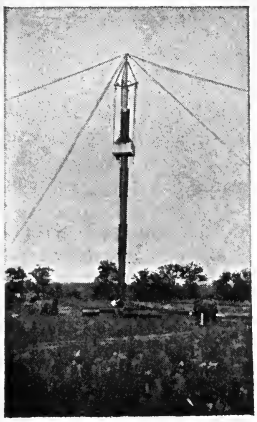

Fig. 313—A Tubular Mast in Early Stages of Construction.

In addition to the antennae stretched between the masts, great quantities of wire were placed in the ground about the stations in order to provide an efficient earthing system or ground connection. Told in brief, a circle of zinc plates is buried in a trench, bolted together and jointed to the wireless circuits of the power house by copper wires. Wires radiate from the zinc plates in the ground to a set of outer plates, from which extend another set of earth wires placed in trenches running the full length of the aerial. The general scheme for the earth connection is shown in Fig. 320.

236. Radio-Frequency Circuits of the Damped Wave Transmitters.—A description will now be given

of certain apparatus of the radio-frequency circuits of the high power transmitting stations employing apparatus for the production of *damped waves.*

As in the small station, the principal circuits are simple, but it is easily seen that when about three hundred kilowatts are to be carried in the circuits and turned into high frequency currents, the problem must be handled with care. Some of the special arrangements made to use this large amount of current safely and efficiently may be of interest to the student.

The *closed oscillating circuit* is of interest because of the size and construction of its various elements. The *discharger* is of the *rotating-disc type,* and is directly connected to the shaft of the alternator. The foundation upon which it rests is a solid block of concrete weighing about seven tons, supported by piles of insulating compound in such a manner that the framework of the discharger is well protected. The coupling for the alternator is also insulated, the only live part being the discs which serve as the poles between which the studs pass. The spark discharge is well quenched by a blast of air under high pressure. In order that the phase relation between the alternator current and the spark may be varied to the most advantageous point, the alternator is built with the armature frame, the machine being of the rotating field type, mounted in a secondary outside frame, with a track machined in its inside circumference. On this track *the armature frame may be rotated through an arc equal to the angle between the poles,* by means of a hand wheel. Thus the spark may be made to discharge the condenser at any desired point of the sine wave. The dischargers are set in sound muffling rooms and the leads run up through the ceiling to the oscillation transformers mounted on the floor above. These rooms are exhausted by motor-driven blowers

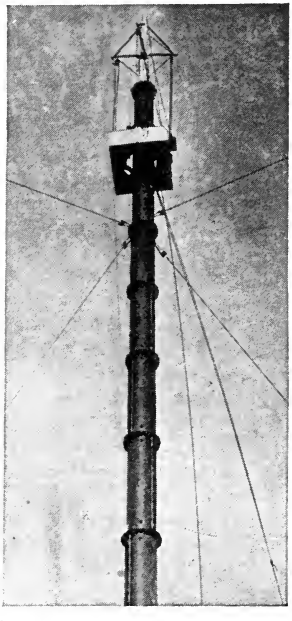

Fig. 314—Showing the Cage and the Top Mast Several Hundred Feet from Earth.

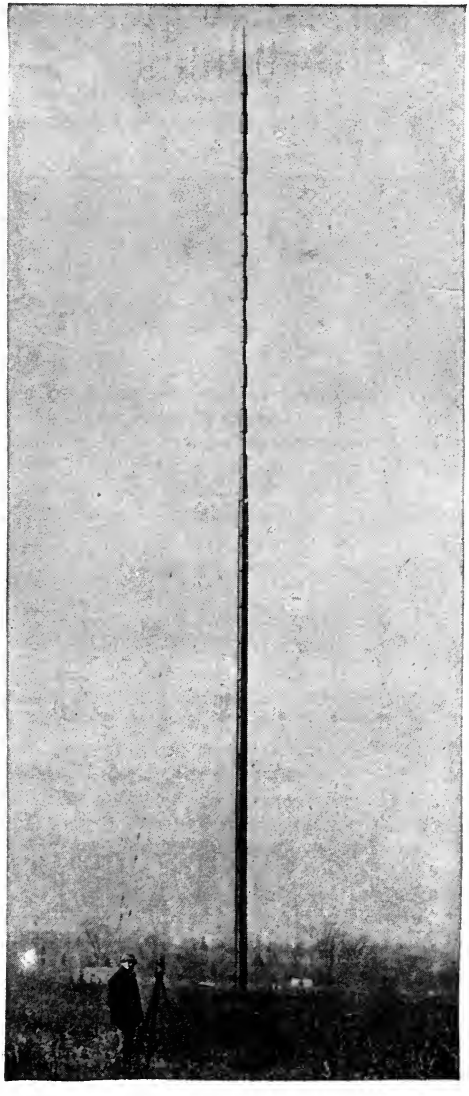

Fig. 315—Completed Mast (Guys Not Shown).

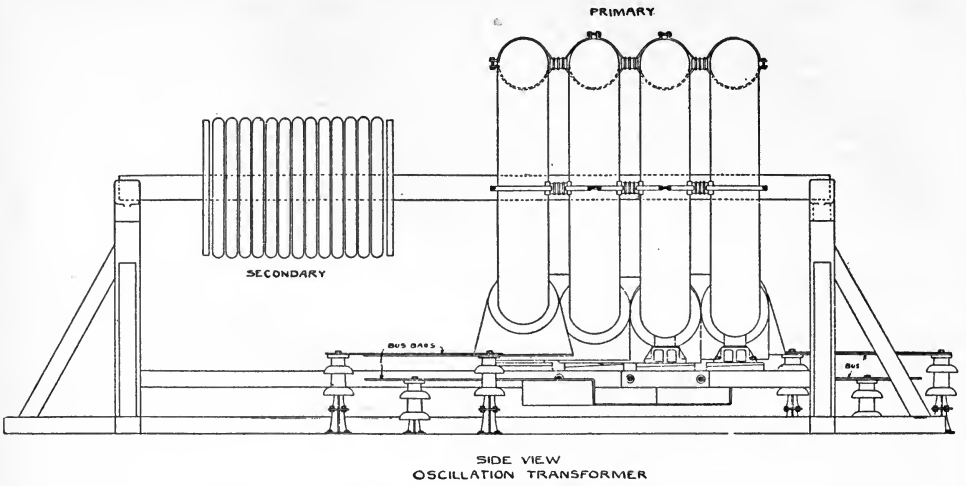

Fig. 316—Side View of 300 Kilowatt Oscillation Transformer.

of capacity sufficient to keep the air fresh and to draw out the air, which is admitted by the high pressure blast used for quenching the spark.

One of the precautions taken to provide an uninterrupted service is to duplicate any and all pieces of apparatus which are at all likely to be disabled. Thus, two generators and two disc dischargers are supplied for each station, and a ready means provided to connect either one to the bus and the oscillation transformer.

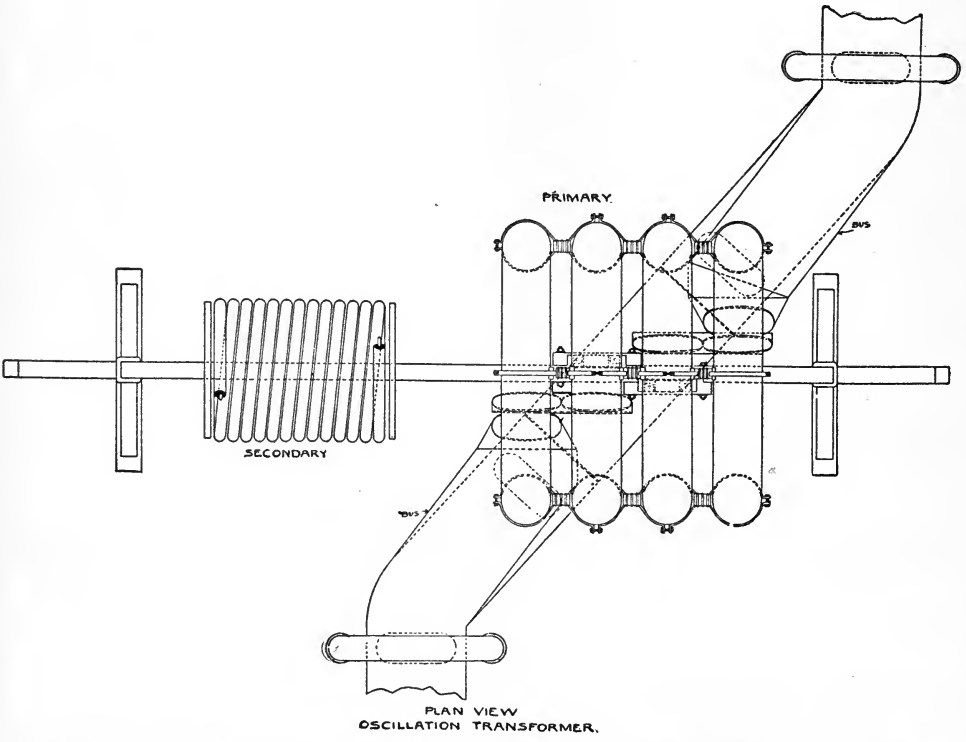

Fig. 317—Plan View 300 Kilowatt Oscillation Transformer Showing High Tension Bus-Bar.

As the oscillation transformers are worthy of note, a sketch of them accompanies this Chapter (Figs. 316, 317 and 318). It will be seen that the coils are mounted on a horizontal axis and supported on a wooden frame. The primary coil is in series in the closed circuit. It consists of four turns, each turn being almost a complete ring of about 345 degrees. These turns are connected by heavy copper plates, making the equivalent of a helix of four turns. The helix is five feet in diameter (See Fig. 318), and the section of the turns one foot in diameter. The turns are made of a wooden former, upon which the conductors are grouped. They follow along the length of the former, but have a long pitch in a spiral direction laid upon it in such a way that the length of each wire is the same starting from one connecting plate to the next, that is, through the arc of 345 degrees. All the conductors are, in themselves, made up of stranded insulated copper wire.

The *secondary coil of the oscillation transformer* is wound on a wooden former, composed of two end plates with wooden rods, upon which are mounted porcelain spools. On these spools the conductor is wound; it consists of fourteen turns of a specially built high frequency cable. The cable is made by winding thirty-six small conductors around a hemp center core, each conductor being made of seven double cotton covered wires. There is a cotton cover over the whole cable, which is about three inches in diameter. In mounting this secondary coil on the frame, the barn-door type of roller bearings is employed. This makes a device that can be constructed totally of wood, and for close adjustment a wooden hand screw is used, which will clamp the coil on the supporting bar of the frame, as well as furnish the means for adjustment.

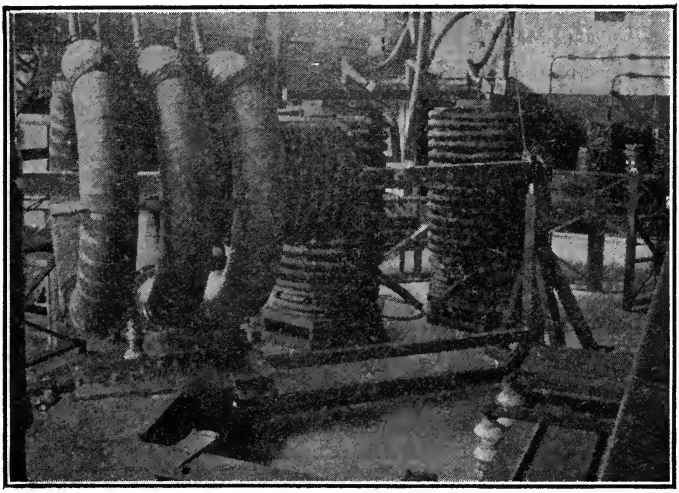

Fig. 318—The 300 Kilowatt Oscillation Transformer Installed at the Marconi High Power Station at Kahuku, Hawaiian Islands.

From the oscillation transformer, the buses (Fig. 317) are led to the center of the condenser room, and as the transformer is on the second floor of the powerhouse, the main leads are carried horizontally about fourteen feet above the condenser room floor. The condenser bank is divided into four groups, each group being fed from the overhead buses. Each group is then subdivided into four sections of twenty-four tanks. They are connected in parallel series, three tanks being in each series and eight rows of three tanks each in parallel in each section.

From the central point of the room the overhead buses lead radially to points directly over the center of each section. Here the leads are carried down to a level with the condenser tops. From this point the sections are fed. The main bus is made of twenty-four inch wide copper, bent in trough shape, the return lead being supported under the other. At every point where the leads divide, a smaller size conductor is used, and all the leads are so arranged that the distance between them can be adjusted, in order that the inductance (of the leads) can be varied as the requirements of the circuits demand. By using this system of distribution, the path of the current from the oscillation transformer to any tank in the entire bank of three hundred and eighty-four is exactly the same. This is very important, in order that no one tank will be required to work on a greater current than any other. Each section of twenty-four tanks is set on a sloping floor, and from each section runs an oil drain, under the floor, to a single receiver.

The *condenser tanks* at the high power stations are modifications of the Poldhu type shown in Fig. 319. They consist of stoneware tanks, thirty inches high by seventeen inches wide, by seven inches thick. The design was adopted for the purpose of keeping in view

the necessity of the quick and easy replacement of plates. All the elements of a tank can be lifted out bodily and new plates of glass readily inserted. A fibre sling carries thirty-one glass plates and twenty-nine zinc plates, every alternate zinc plate being connected to the buses.

As will be seen in the sketch, the plates are connected to the terminals by flexible strips, which compensate for any inequalities in the depth of the tanks. The covers are thoroughly oil-sealed, and the whole tank is filled with a high grade mineral oil. As the slightest trace of moisture in the oil renders its insulating value inadequate, and as oil is highly hygroscopic, it is quite essential to use only very dry oil. To obtain this, a filter press is installed in each station.

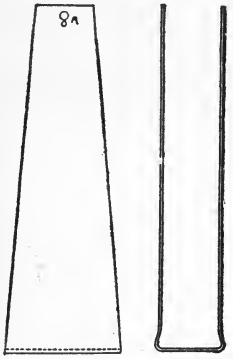

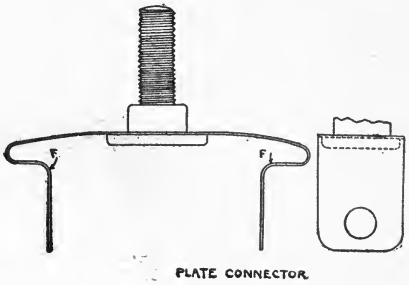

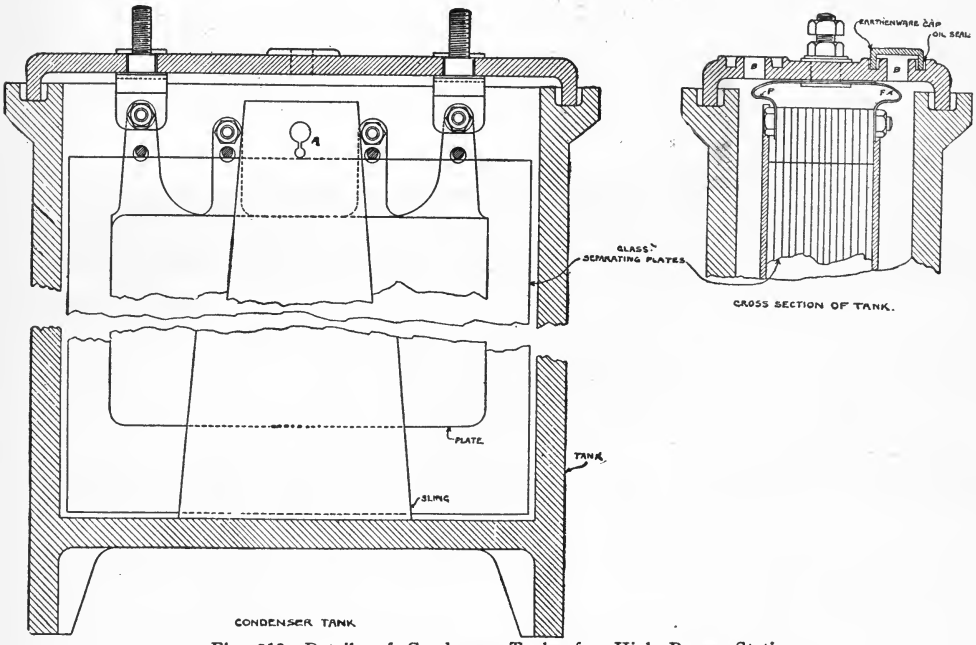

Fig. 319—Details of Condenser Tanks for High Power Stations.

If any tank fails or is broken down, the section of which it is a unit is cut out of the bank, and the spare section cut in. Then a portable derrick is run over the section, and by means of a block and tackle, which it carries, the contents of the tank are lifted out. To do this, a pair of tongs are run down through the small holes in the center of the cover, and the hooks inserted in the holes in the fibre sling. Thus the contents of the tank can be lifted out with the cover attached, and a new set of elements put in very quickly, without lifting the tank itself. After this, repairs can be made to the elements at leisure.

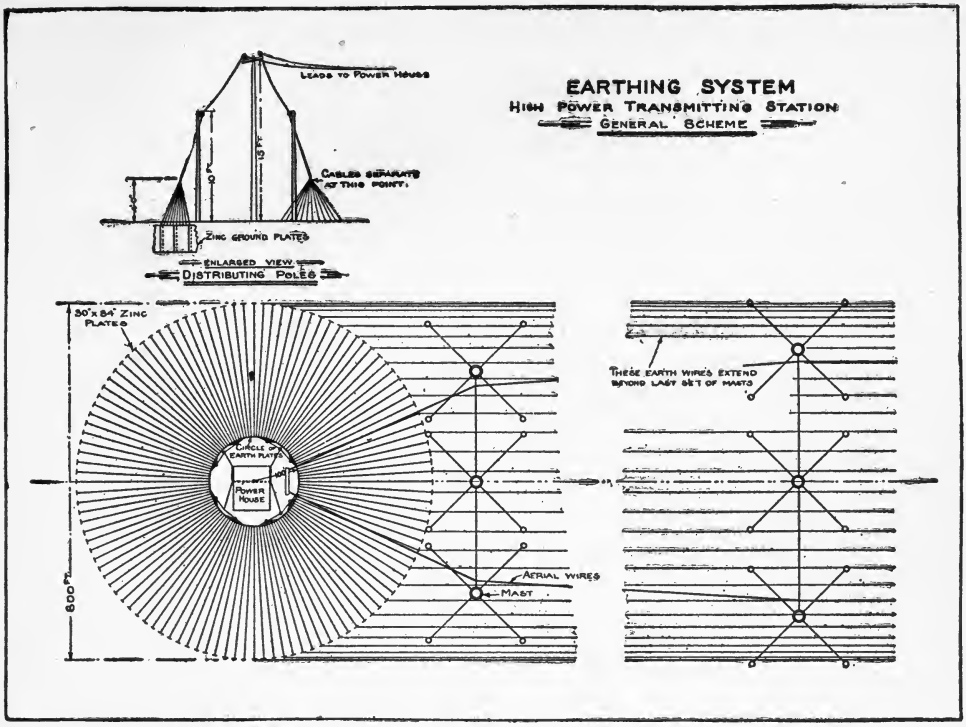

Fig. 320—General Scheme of Earth Connections for High Power Stations.

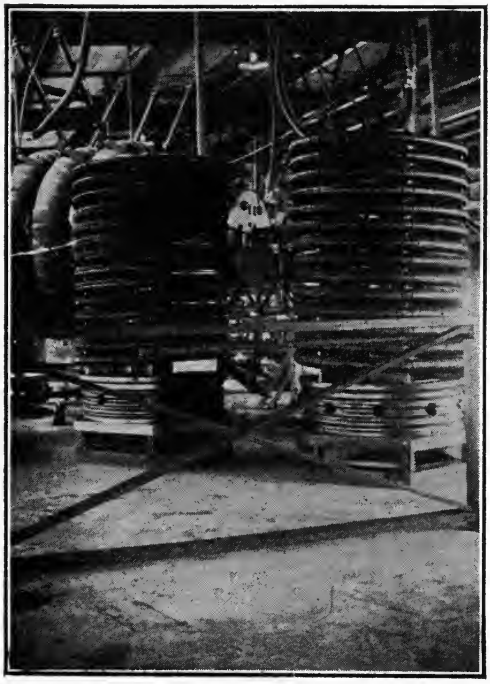

Fig. 321—The Aerial Tuning Inductances at Kahuku High Power Station.

237. **Other U. S. High Power Stations.**—In addition to the Marconi High Power Stations just described, two additional stations have been erected in the United States for transocean communication, which are now under the control of the United States Government. One is located at Sayville, Long Island, and the other at Tuckerton, New Jersey. In the original installation, the Sayville transmitter consisted of a 100 K. W. quenched spark set operated at the wave length of 4,800 meters, but in the past two years a 100 K. W. Joly-Arco undamped transmitter has been in use and has been operated at a wave length of 10,000 meters. During the favorable hours of the day, communication has been established with a corresponding station located at Nauen, Germany, the latter station being fitted with a powerful undamped wave transmitter.

The station at Tuckerton, New Jersey, is equipped with a 200 K. W. Goldschmidt radio-frequency alternator and a 100 K. W. Poulsen arc type of transmitter, both of which are employed for communication with a corresponding station at Hanover, Germany, the latter station being fitted with a 200 K. W. Goldschmidt alternator.

Both the Sayville and Tuckerton stations employ the umbrella type of aerial, erected on masts of great height. The Tuckerton tower, in fact, is 850 feet in height, while the tower at Sayville is approximately 550 feet high, and, as is to be expected, the aerials supported by these towers require a great deal of space for erection.

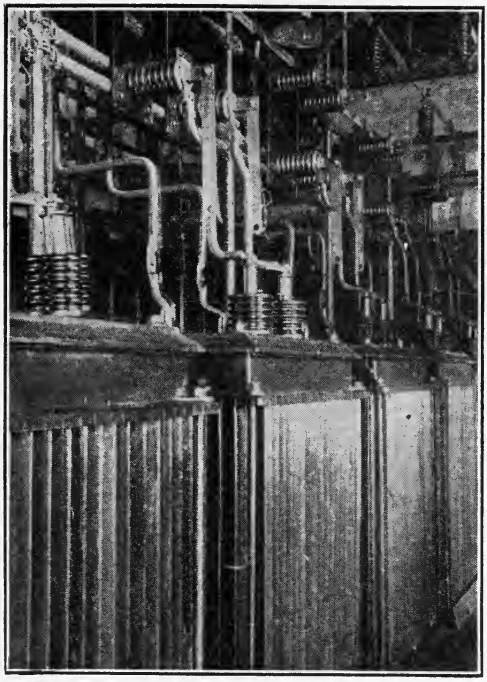

Fig. 322—Bank of High Voltage Transformers at Kahuku.

In initial experiments at Tuckerton, New Jersey, the Goldschmidt tone wheel was employed as a receiver, but of late a modified form of the oscillating vacuum valve has been in use, which gives increased strength of signals. The receiving apparatus at Sayville is of the vacuum valve oscillating type, various circuits being used, generally the type favored by the particular electrician in charge.

238. Long Distance Receiving Sets.—Various types of long distance receivers have been developed by the Marconi's Wireless Telegraph Company, Ltd., both for the reception of damped and undamped oscillations. The high power stations in the United States are fitted with balanced crystal or Fleming valve receivers, the local circuits of which are connected to 3 or 4 microphonic amplifying relays, connected in cascade. By means of these a considerable amplification of the incoming signals is obtained, which, in fact, can frequently be heard with the receivers lying on the table with the transmitting station 3,000 miles distant.

Marconi trans-oceanic receiving stations are also completely equipped with dictaphone receivers which are arranged so that immediately one wax record is indented with signals, a second dictaphone receiver is automatically connected in the circuit, and so on. The use of these records permits traffic to be dispatched across the ocean at speeds up to 75 words per minute, which is afterwards transcribed on the typewriter by the receiving operator at speeds varying from 30 to 40 words per minute. Obviously this system will permit a greater amount of traffic to be handled between two stations and it will, therefore, be employed when atmospheric electricity is not too severe.

239. Condensed List of High Power Stations.—Some of the long distance transmitting stations of the Marconi Company, their locations, systems and power are shown in the following table:

Location	System	Power	Wave Length in Meters
Carnarvon, Wales	Continuous and discontinuous waves	100-300 K.W.	6,000 to 10,000
Clifden, Ireland	Discontinuous waves	75-150 K.W.	5,500
Glace Bay, Nova Scotia	Discontinuous waves	75-150 K.W.	8,000
Stavanger, Norway	Continuous waves	150 K.W.	?
Marion, Mass.	Continuous waves	150 K.W.	?
New Brunswick, New Jersey	Continuous and discontinuous waves	150-300 K.W.	8,000 to 15,000
Bolinas, California	Discontinuous waves	300 K.W.	6,000 to 10,000
Kahuku, Hawaii	Discontinuous waves	300 K.W.	6,000 to 12,000
	Discontinuous waves	300 K.W.	6,000 to 12,000

OTHER TRANSOCEANIC STATIONS.

Location	System	Power	Wave Length
Sayville, Long Island	Joly-Arco (continuous waves)	100 K.W.	9,400 meters
Tuckerton, New Jersey	Goldschmidt High Frequency Alternator (continuous waves)	150 K.W. generator, 90 K. W. arc	7,400 meters

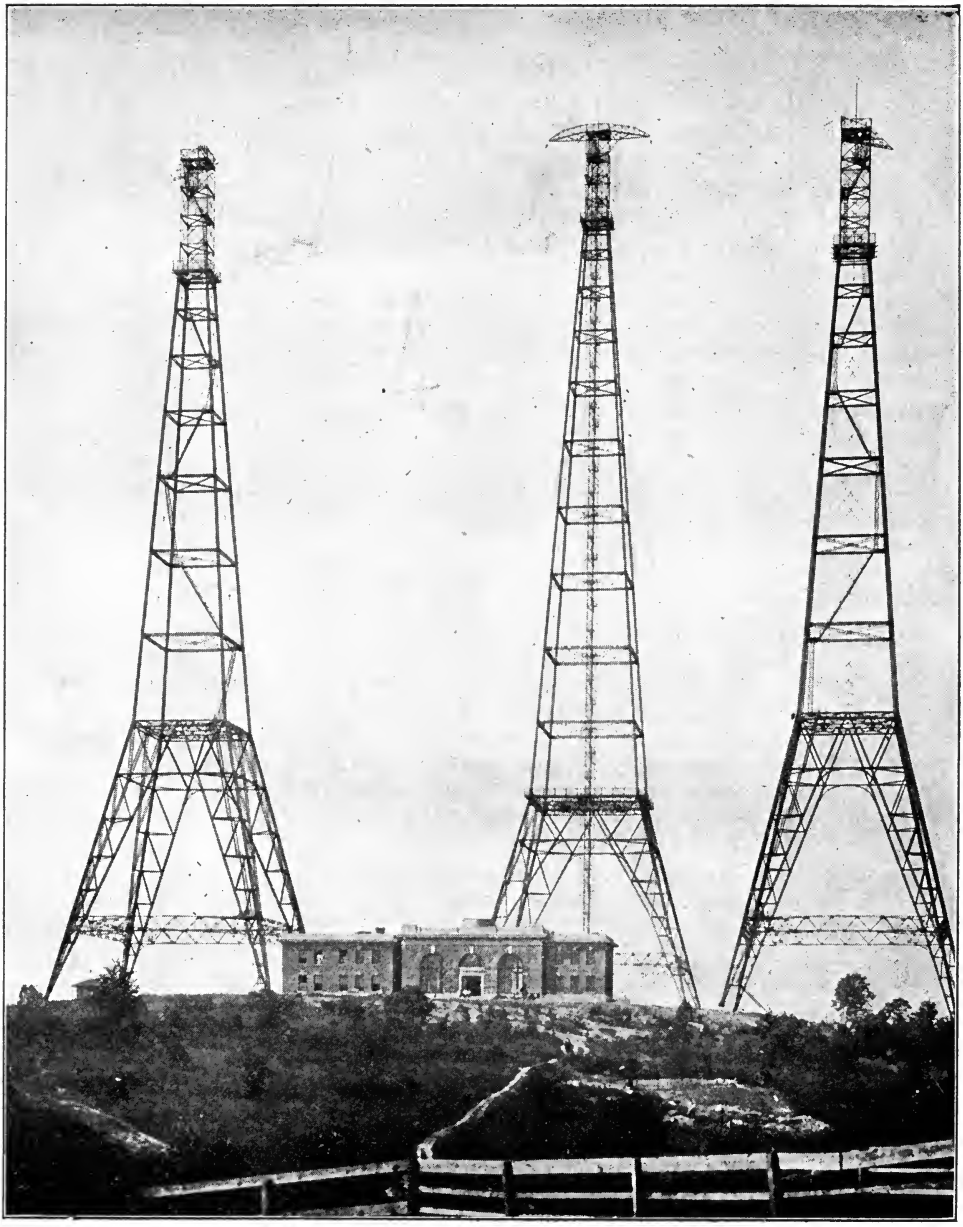

Fig. 323—U. S. Naval Radio Station at Radio, Va. (Arlington).

PART XVII.

LOCATION OF TROUBLE—MAINTENANCE —REPAIRS

240. In General. 241. General Precautions. 242. Makeshift Testing Apparatus. 243. Checking Up the Transmitter. 244. The Faults of the Transmitter. 245. Possible Faults of the Motor Generator. 246. Trouble in the Receiving Apparatus. 247. Improvised Transmitters and Receivers.

240. In General.—Unless the student can apply in a practical way the fundamental knowledge of radio which he has gained in the class-room, he is hardly qualified to operate commercial wireless telegraph equipment. The ability to locate troubles in radio apparatus as they arise constitutes one of the most important essentials of a first-class operator's qualifications. The author would not create the impression that the radio telegraphist may expect to encounter an inordinate amount of trouble when he takes charge of a ship's wireless station, because modern wireless apparatus if properly cared for gives a minimum of trouble; but nevertheless, it would be well to point out here those parts of a wireless telegraph set which are most apt to be at fault in event of an unexpected breakdown.

What to do at the critical moment in event of emergency is the subject which concerns us most in this chapter. The ability to weed out troubles in electrical circuits and apparatus comes naturally to some, but with others it must be gained by careful study coupled with or followed by practical operation of the apparatus.

Unlike the wire telegraph or wire telephone operator, the radio telegrapher is thrown strictly on his own resources. There is no skilled engineering or maintenance staff at hand, when at sea, to locate troubles or to offer advice. The operator is required to exercise his own initiative, and the manner in which he handles a particular problem will disclose his knowledge of the art in general.

The student should always bear in mind that he deals in radio telegraphy in the main, with high frequency, high voltage currents, hence many trouble-finding tests which would be perfectly proper for ordinary telegraph or telephone circuits would be entirely useless in radio.

We should take into consideration that wireless apparatus is subjected to conditions at sea which are not met with in the factory, the laboratory, or the land station—such as moisture, vibration, salt spray, etc., which tend to weaken the delicate parts or to destroy the insulation. Hence, one of the most important rules to obey is, **KEEP THE APPARATUS DRY AND DO NOT ALLOW DIRT TO ACCUMULATE UPON IT.**

When a wireless operator searches for trouble in a radio set, we may say, in general, that he will look for one of three things:

(1) A short-circuit.
(2) An open circuit.
(3) A leak in insulation.

And, if he will go about the work in an orderly manner keeping thoroughly in mind the function of each part of the set, his success is assured at the outset.

241. General Precautions.—A few words of advice may be offered here which may prevent future troubles. The following rules apply generally to radio sets:

(1) **Keep the bearings of the motor generator well oiled and inspect the oil gauges or oil wells at least once a week.**
(2) **Clean the motor brushes as often as they require it. (This will prevent copper dust imbedding in the carbon, which causes excessive wear on the commutator.)**
(3) **Go over the transmitting apparatus with a slightly oiled rag at least twice per week to prevent the accumulation of moisture on the insulating parts. Do this oftener if the moisture or humidity is excessive.**
(4) **Keep all switch contacts well polished and switch blades thoroughly tightened.**
(5) **Go over the nuts and bolts of the panel sets with a small spanner wrench from time to time (they loosen by vibration).**
(6) **Keep the aerial wires taut and take up all side sway.**
(7) **Inspect the aerial from time to time to insure that it does not swing into contact with some nearby conductor.**
(8) **Keep the storage batteries fully charged at all times.**
(9) **Keep the plates of the cells covered with water at least one-fourth of an inch.**
(10) **Inspect the connections between cells frequently.**

242. Makeshift Testing Apparatus.—A convenient and practical trouble finding apparatus is the simple incandescent lamp which may be used to locate *open circuits* or *short-circuits* in certain types of electrical apparatus. The lamp, if connected as in Fig. 324 to a source of 110 volts D.C. will light to full brilliancy if the circuit is closed at A, B, through some device which is not of too high resistance.

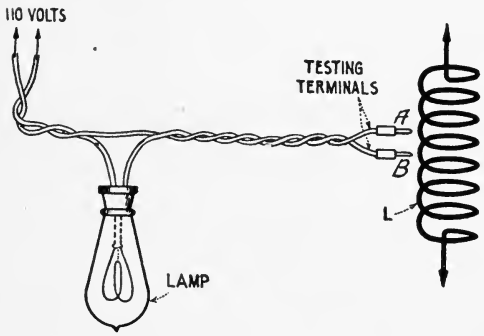

Fig. 324—Simple Test Lamp Circuit for Determining an Open Circuit in a Coil.

If the resistance of the coil of wire L, for example, does not exceed, say, 50 ohms, the lamp will light to a fair degree of brilliancy if the circuit is *continuous,* but, obviously, if the coil is broken at any point the lamp will not light, and an open circuit will therefore be indicated. It is easily seen from this simple problem alone, that the would-be trouble finder must have some knowledge of the electrical constants of the circuit with which he deals in order that he may apply the proper testing apparatus.

To illustrate, if the coil L had resistance of, say, 500 ohms, the lamp would not glow even if the circuit were electrically complete. Hence, we would have to devise another type of testing apparatus to locate this trouble.

The arrangement shown in Fig. 325 would suffice. Here an ordinary telephone receiver P is connected in series with the dry cell C and the coil L, and if the circuit is complete, a distinct "click" due to the battery current will be heard when the testing circuit is opened and closed; but if the circuit is open this characteristic sound will not be heard. It should be kept in mind that the telephone is an exceedingly sensitive instrument and will detect very feeble currents flowing in any circuit in which it is placed.

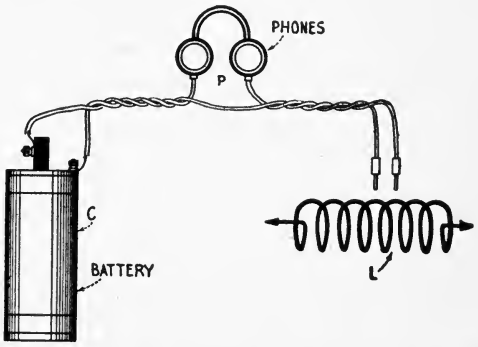

Fig. 325—Testing Circuit Made by a Battery and Head Telephones.

Certain operators in the commercial radio service, in attempting to locate an open circuit in the windings of a receiving transformer, have committed the error of connecting a bell-buzzer and a battery in series with the coil, and have assumed, because the buzzer did not vibrate, that the circuit was open. The fact is, that in this particular instance the resistance of the tuning coil would not permit sufficient current to pass to actuate the buzzer. In a case of this kind the telephone and the battery should be employed.

The simple testing apparatus just described is only applicable to the troubles of ordinary low-voltage circuits. Other methods for testing high-voltage radio-frequency circuits will be described in the order of their importance. *The student should bear in mind that the text of this chapter will bear only on practical ways of testing apparatus when the ship is at sea, under conditions where an elaborate testing system is not available.*

243. Checking up the Transmitter.—Each ship's radio installation is furnished with a tuning chart showing the number of turns in use in the open and closed radio-frequency circuits and in the aerial tuning inductances. This data also includes the setting of the coupling for the best efficiency and any other special instructions which may pertain to the adjustment and operation of a particular installation.

Suppose, upon entering the wireless cabin for the initial trip, the operator desires to test the apparatus, as he is expected to do, before sailing. *He first checks up the position of the clips on the oscillation transformer by the data given on the tuning chart, and assures himself by careful inspection, that all circuits are complete. He then dons the receivers, places the aerial changeover switch in the "receiving" position, and then carefully adjusts the receiving detector to the maximum degree of sensitiveness by means of the test buzzer.* Next, he carefully tunes the receiver to any station which may be in operation within range, and observes the nature of the traffic being dispatched to assure himself that any testing which he may do with his transmitter will not interfere with the operation of commercial or naval stations.

In certain ports, it will become necessary to request permission by radio from the nearest naval or commercial station before any testing whatsoever is carried out. Of course, in times of war, no such work will be allowed except by special permission from the Government authorities.

Feeling assured that he will not interfere with the traffic of other stations, *the operator starts the motor generator, places the aerial changeover switch in the transmitting position, presses the key, and notes the reading of the aerial ammeter.* Suppose the aerial ammeter reads but 7½ amperes when the normal reading, according to the tuning chart, should be 14 amperes. If the wattmeter reads normal power, say 2 K. W., such as the Type P-4 standard Marconi set, there is either leakage in the antenna circuit or there has been some error in placing the clips of the oscillation transformer or the aerial tuning inductance. The turns should again be carefully checked up and if there has been an error in the original setting, it should be at once corrected.

This trouble may also be caused by an improperly working spark gap. For instance, some of the gaps in the quenched gap may be short-circuited, but, generally, this would be shown by reduced reading of the wattmeter. In the case of the rotary gap, this may be the result of the lack of synchronous adjustment, which should be immediately attended to.

It is noted in modern Marconi transmitting sets, that the tuning of the antenna circuit is often seriously affected by the presence of a nearby metallic structure, such as a metal dock building, another ship with an aerial nearby, or parallel derrick cables which may have been erected temporarily for hoisting purposes. If the reduction of aerial current in the foregoing example is due to one of the latter causes, normal antenna current will be obtained when the vessel returns to sea. But it is hardly possible that a reduction of current as great as that above mentioned will be occasioned in this way.

244. The Faults of the Transmitter.—Assume that spark fails to discharge at the gap when the transmitting key is closed. Unless the apparatus has been actually injured by an accident, the operator should ask himself:

(1) Is the alternator generating current?
(2) Is the generator field open?
(3) Is the primary or the secondary winding of the high voltage transformer open or on short circuit?
(4) Are the high potential condensers punctured?
(5) Is there a leakage in the walls of the spark gap muffler?

(*a*) *Test for the Alternator.*—If the radio set contains a voltmeter and the meter itself is not at fault, and furthermore, if it is placed in shunt to the A. C. line and no reading

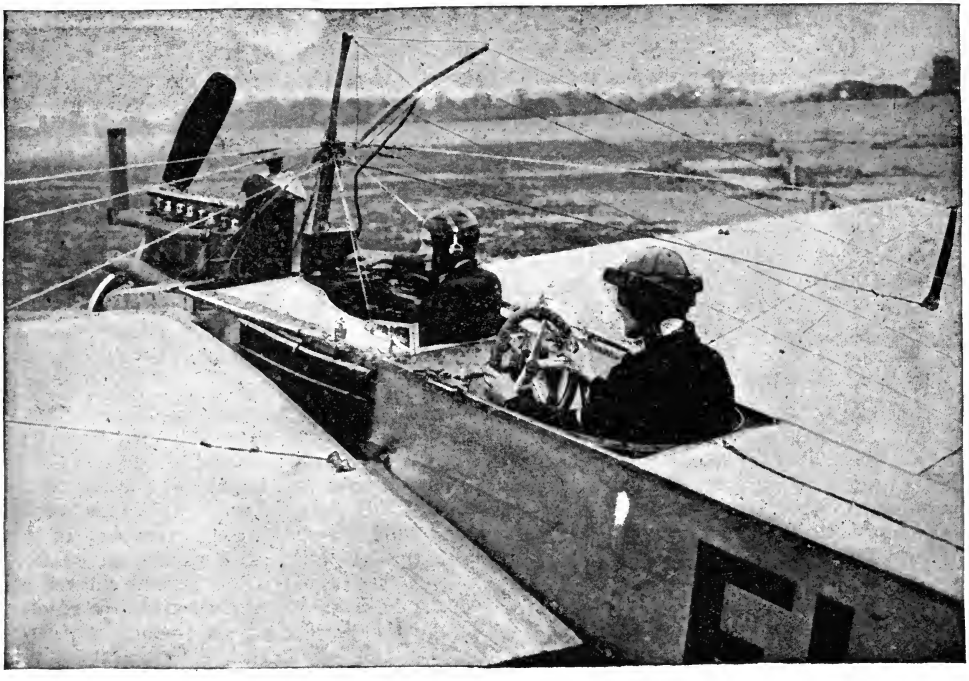

Fig. 325A—Scout Airplane Equipped With Wireless Apparatus.

Fig. 325B—Oscillating Valve Wireless Telephone Set Developed by Marconi's Wireless Telegraph Co., Ltd.

is obtained from it when the generator is in operation, it may be due to one of the following causes:

(1) An open circuit in the armature.
(2) An open circuit in the field windings.
(3) The field current may have been cut off.

If the generator fields are fed with 110 volts D. C., whether or not the field current is "on" can be determined simply by placing a 110-volt incandescent lamp in shunt to the field terminals. If any doubt exists as to the continuity of the field circuit, a test can be made by placing a 110-volt lamp in series with the field coils, and if the filament does not glow it indicates that the circuit is open. If the circuit is continuous the lamp will glow dimly.

If the voltage of the alternator under normal operating conditions is known, whether or not the armature is generating current can be determined by placing an incandescent lamp (or perhaps a bank of lamps) in shunt to the brushes. For example, if the potential of the alternator is 380 volts on open circuit (such as the alternator furnished with the Marconi 2 K. W. 500 cycle transmitting set), then four 110-volt lamps should be connected in series and if the armature is generating current the lamps will light to a fair degree of brilliancy. A bank of lamps connected in series makes a very practical voltmeter for approximate determinations of potentials.

(*b*) *Test for the High Voltage Transformer.*—In the earlier radio systems a short-circuit due to a puncture between layers of the primary winding would be indicated by blowing the fuses between it and the generator when the transmitting key is closed; but in modern motor generators, a short-circuit would not be evidenced in this way owing to the high synchronous impedance of the armature circuit. In fact, in modern Marconi motor generator sets no fuses are inserted in the generator circuit. In transformers of the former type the continuity of the primary winding can be determined by placing an ammeter in series and if the normal current intake is known, and an excessive reading is obtained, a partial or complete short-circuit is indicated. The circuit for this test is shown in Fig. 326.

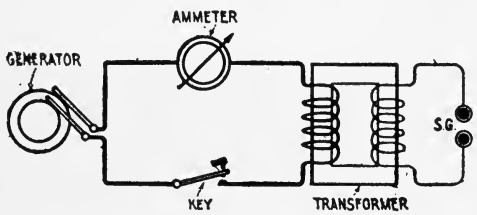

Fig. 326—Showing How Defects in the Primary and Secondary Windings of the Transformer May be Located.

The condition of the secondary coils may be determined by a *flash test.* The secondary terminals of the transformer, Fig. 326, are separated by a space of say ¼ of an inch, and normal current supplied to the primary winding. If a heavy flash is not secured at the gap when the transmitting key is closed, it is an indication that some of the secondary coils are short-circuited. Generally, the burned out section can be observed, by smoking which will take place at the short-circuited section. *The injured secondary section should be removed and replaced by a spare which is furnished to all ships.*

(*c*) *Test for the High Voltage Condensers.*—A punctured leyden jar can generally be located on sight upon closing the telegraph key, provided the remainder of the transmitting set functions properly. A flaming arc will take place between the coatings through the walls of the jar. A punctured plate in an oil plate glass condenser can be determined in the same way.

(*d*) *Leakage in the Muffler Box.*—Whether or not there is leakage over the walls of the muffler box can be determined by disconnecting the condenser discharge circuit from the spark gap and making another temporary discharge gap outside the muffler. If a normal spark discharge is now obtained, but an intermittent or partial discharge when the circuit is re-connected to the spark gap proper, it is obvious that severe leakage exists.

(*e*) *Test for the Insulation of a Wireless Aerial.*—Leakage across the insulators of a wireless telegraph aerial can be determined by the test shown in Fig. 327. The secondary winding of an induction coil or high voltage transformer is indicated at the spark gap S-1, the antenna at A, and the earth connection at E. Assume when the discharge gap S-1 is shortened to a fraction of an inch (say 1-16 of an inch) no spark discharge is obtained upon closing the primary circuit of the coil; this is a positive indication that the antenna insulation is broken down. The aerial should now be lowered, and the defective insulator removed,

(*f*) *Quenched Spark Gap Troubles.*—It is essential that the discharge gaps of a multiple-plate quenched gap be air-tight. A leakage of air will be manifested by an irregular spark discharge, by a fluctuating wattmeter reading, or by lack of normal antenna current as indicated by the aerial ammeter.

In general, this leakage can be avoided by compressing the plates with the "take-up" bolt at the end of the quenched gap frame, but now and then a defective insulating gasket may leak irrespective of this precaution. In due time the leaking plates will carbonize and short-circuit. The defective gap can be located by means of a small spark gap testing-rod which is supplied to all modern Marconi sets. (The testing-rod consists of a copper fork mounted on the end of a wooden rod.) With the spark discharging through all the plates of the quenched gap, the rod is connected across two plates at a time, followed by opening and closing the circuit. If a spark takes place on the edge of the fork when this is done, the gap is in normal condition, but if no spark is secured, a complete short-circuit is evidenced.

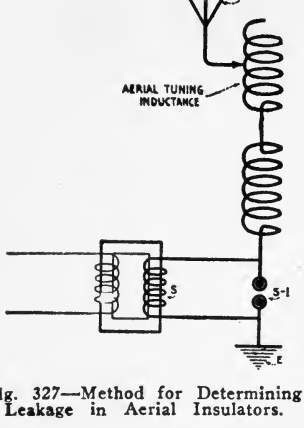

Fig. 327—Method for Determining Leakage in Aerial Insulators.

In event so many plates are short-circuited that the gap must be taken down, extreme care must be taken to polish each plate thoroughly, removing all carbonized deposits and lint which may adhere to the surfaces during the cleaning process. After all plates are thoroughly cleaned, they should be replaced in the rack and new insulating gaskets inserted. It will then be necessary to discharge the gap for one or two hours in order to place it in working condition; but this should be done at low power. For instance, if the normal power input of the set is 2 K. W., it should be reduced to 1 K. W. during the "seasoning" period.

If the motor blower burns out or ceases operation from any cause whatsoever, the trouble should be immediately attended to, as the gap cannot be used more than two or three minutes without a constant blast of air being supplied to its cooling flanges.

In taking apart a multiple plate gap, it should be heated by allowing the spark to discharge through it for a few moments with the motor blower disconnected. The compound on the insulating washers will then soften and the gap plates will drop apart readily. If taken apart when cold, the fibre washers will adhere to the copper plate and the deposit will need to be scraped off with a knife.

245. Possible Faults of the Motor Generator.—The troubles ordinarily found in the motor generator are similar to those to be expected in any dynamo or motor. If the defect in a dynamo or motor armature is a serious one (such as a burned out armature) it will be difficult to effect a repair at sea unless the operator is skilled in armature winding.

In addition to the common faults of the motor generator, another is encountered in radio, viz., induction from the transmitter. Powerful static and magnetic fields are set up in the region of the radio-frequency circuits, particularly about the aerial, which may induce currents of very high voltages in the low voltage power circuits. The insulation may thus be punctured and a serious burn-out result.

The windings of the armature and the field coils of a motor generator would be most apt to suffer from this induction, but as we have mentioned in paragraph 57, page 64, the protective condensers ordinarily supplied with motor generator sets are very effective in neutralizing induced potentials. Troubles of this sort are now infrequent.

An induced current of high voltage may, for instance, burn the insulation of the conductors in a motor generator and place one of the wires in direct contact with the frame. If an earth connection exists at any other point in the power system, a complete short-circuit may occur. It should be kept in mind at this point that the frame of the motor generator in modern Marconi sets is connected directly to earth and therefore electric contact between the armature or field winding and the frame, under this circumstance, would be more serious than in systems which are not earthed.

(*a*) *Testing for Grounds.*—Fig. 328 shows how a "grounded" wire can be traced down. Using a 110-volt source of current and an incandescent lamp, one side of the circuit is connected to the frame of the motor generator and the other to the commutator or to one of the

terminals of the field winding. If the lamp lights to partial or full brilliancy, the insulation of the armature or field circuits is broken down at some point.

The circuit in which the ground exists can be determined by taking the brushes off the commutator and applying the foregoing test to the armature and field coils separately. By disconnecting the wires joining the field poles, the test can be applied to each coil individually until the troublesome one is found.

It is comparatively easy for an inexperienced man to rewind a defective field coil, but replacing a burned-out armature coil requires the services of a skilled repairman. This is a painstaking job which requires careful workmanship.

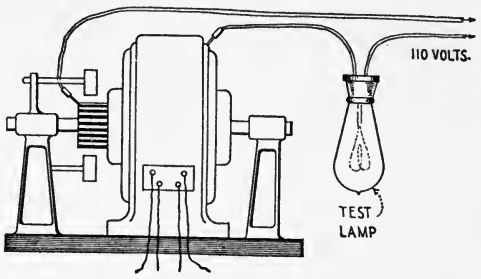

Fig. 328—Locating "Grounds" in a Motor.

(*b*) *Locating Troubles in the Armature.*—If the insulation between an armature coil and the iron is supposedly at fault, and furthermore, another "ground" exists in some part of the motor generator circuit, a complete short-circuit will result.

The particular coil which is in contact with the iron can be located as shown in Fig. 329. The coil terminals are unsoldered from the commutator and the lamp test applied to each until the defective coil is located.

An open circuit or short-circuit in a particular armature coil can be traced down by the connections shown in Fig. 330. A voltmeter is applied to adjacent segments of the commutator as shown at the right of the armature. The brushes of the armature are placed in contact with the commutator and a source of 110 volts D. C. connected through a regulating rheostat. (This precaution is particularly important, as otherwise excessive current will flow.)

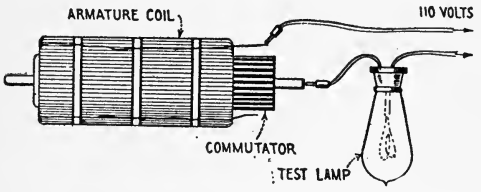

Fig. 329—Showing How to Find a Grounded Armature Coil.

If the armature is in perfect condition, with this test, the current will divide equally between the two brushes and a practically equal drop of potential will be obtained across each set of adjacent segments.

If one of the coils is open a reading of the voltmeter will be obtained across adjacent segments on one side but no reading will be had on the open side until the open coil is bridged, when a much larger reading than between two segments on the opposite side will be secured.

A *millivoltmeter* is often required for this test, depending upon the resistance of the individual armature coils.

If but one or two coils in a motor armature are short-circuited, the motor can be operated temporarily by placing a small wire jumper across the segments of the defective coil. This will throw a heavier load on the remaining coils but the motor can be at least operated for brief periods. A short-circuited motor armature coil will have to be removed and replaced by a new one, but this repair should only be undertaken by a skilled mechanic.

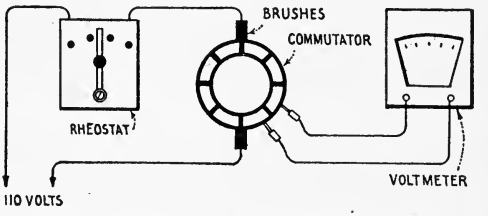

Fig. 330—Locating an Open Circuit or Short-Circuit in Armature Coils.

The additional troubles which may be encountered are:

(1) Sparking at the brushes.

(2) The commutator may be rough and uneven.

The remedy in either case is obvious. The brushes should be cleaned from time to time with a fine grade of sand paper. EMERY PAPER should in all cases be avoided.

If the commutator is very rough and cannot be brought to smoothness by sand paper, the armature will have to be removed and the commutator turned down in a lathe.

(*c*) *Automatic Motor Starters.*—A fair proportion of modern radio installations are supplied with automatic motor starters for the motor generator.

Generally, a *protective resistance* is inserted in series with the solenoids of these starters to prevent the coil from over-heating. These resistances are thrown in the control circuit automatically when the starter is in the "full running" position.

If this coil should burn out, the control circuit will open when the plunger of the motor starter has attained its final position. The control circuit also may be open at another point, and consequently, the starter will not function when the starting switch is closed.

For temporary operation of the motor generator in either case, *the plunger of the automatic starter may be pushed to the "full running" position by hand and propped into place by a stick of wood until a more convenient time for repairs is at hand.*

If the protective resistances above mentioned burn out, two sixteen-candlepower lamps connected in parallel could be inserted in their place.

An open circuit in any part of the control circuit of the automatic starter can be traced down by one of the well-known testing methods.

(*d*) *Burned-out Starting Resistances.*—Occasionally, one of the resistance coils of a hand-operated or automatic motor starter may burn out thus breaking the main circuit of the motor armature.

In this circumstance, the motor, of course, will not start until the open coil is passed, when the armature will be set into rotation with a "jump." This is liable to do serious injury to the armature.

The coil which is burned out may be found by completely disconnecting the starter from all associated circuits and applying a test lamp with a 110-volt source of current (as shown in Fig. 325). The connections to both ends of the starting resistances should be located or contact (from the testing circuit) may be made with the studs on the face of the starter. One terminal of the testing circuit is placed on the first stud and the other terminal connected to successive studs until the lamp goes out. The last coil, evidently, is the one which is burned out and it should be shunted out of the circuit by means of a copper wire.

Due to the fact that motor generators in radio transmitting sets start without load, it is feasible to cut out one or two of the resistances in this way, and the motor may still be set into operation without injury to the armature.

If the small release magnet on the hand-operated starters should become short-circuited or burned out, the handle of the starter may be held in the "full running" position by tying it in place with a piece of cord.

OPERATORS ARE CAUTIONED IN REASSEMBLING A MOTOR GENERATOR TO TAKE PARTICULAR CARE THAT THE RINGS WHICH ROTATE WITH THE ARMATURE SHAFT AND DIP INTO THE OIL WELLS ARE IN POSITION WHEN THE ARMATURE IS REPLACED. LACKING A CONSTANT SUPPLY OF OIL, THE BEARINGS WILL "FREEZE" IN A FEW MOMENTS.

246. Trouble in the Receiving Apparatus.—Like other electrical apparatus, the receiving tuner coils may suffer from open circuits or short-circuits either of which may be located by a battery and a head telephone as shown in Fig. 325.

It would be well to remark here that the mere fact that signals can be heard when the radio set is thrown in the "receiving position," does not insure that the circuits are in proper condition or that the receiver is functioning properly. In radio-frequency circuits a coil may be broken but current will flow due to the capacity between the adjacent parts of the broken turn. The better way to determine if a receiving set is working properly is to set it into excitation by a wavemeter as shown in paragraph 173, page 206. The wavemeter is set at a particular wave-length followed by adjusting the primary and secondary circuits to resonance. Now, if variations of the inductance of the primary and secondary circuit will cause the signals from the wavemeter to disappear, it is a fairly positive indication that the tuner is functioning properly. In other words, proper functioning is assured if the resonant adjustments on the receiver are sharply defined.

(*a*) *Locating an Open Circuit in the Primary or Secondary.*—The diagram of Fig. 331 shows how to locate an open circuit in the primary coils of a receiver.

The binding posts, A, E, are assumed to be those connecting to the aerial and earth respectively. With the battery and head telephone connected as shown, the inductance changing switch is varied from point to point until the click in the receiver disappears when the telephone circuit is broken. The contact point on the switch where the circuit tests "open" is obviously the point at which the primary coil is broken.

A short-circuit is not apt to exist in this winding, as generally, it is made up of a single layer.

A similar test is applied to the secondary winding but it is slightly more difficult to make connection with this winding because the connections from either end of the coil are not attached to distinct binding posts as the primary. Hence, spring contact clips as shown in the drawing can be fastened directly to the studs of the secondary inductance changing switch.

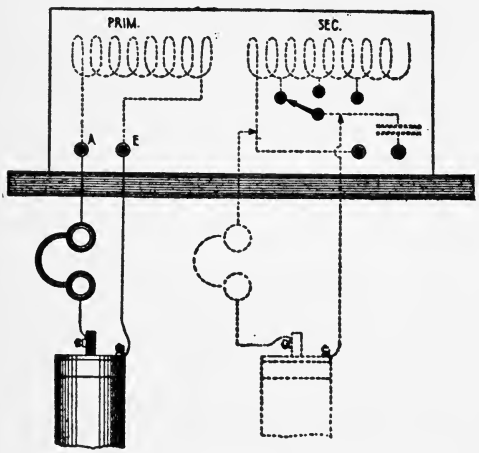

Fig. 331—Indicating a Test for an Open Circuit in a Receiving Tuner.

(*b*) *Locating a Short-Circuit in the Variable Condenser.*—The plates of a variable condenser may drop out of line and touch causing a complete short-circuit at certain positions on the scale. This can be ascertained by connecting a 110-volt lamp in series with a source of current as in Fig. 332. If the plates touch, the lamp will light to brilliancy. A telephone and battery may be used in a similar manner.

A similar test may be applied to the fixed or stopping condenser.

(*c*) *Testing the Head Telephone.*—The cords of a receiving telephone may give trouble due to breakage of the conductor inside the insulation. The test for this is simply made. *The telephones should be firmly attached to the terminals of a dry cell and the cords shaken violently.* If a rasping sound is heard, a loose contact in the conductor is indicated.

An open circuit may exist in the bobbins of a receiver. No sound will therefore be heard when the receiver tips are attached to a dry cell. Whether or not the trouble is in the cords or in the bobbins can be found out by placing a jumper around the cord tips at the point where they enter the receiver cases. A second pair of telephones which are known to be in working condition are now connected in series with a battery and the defective telephones. If a "click" is obtained when the circuit is made and broken with the cords of the first telephone shunted by jumpers, and no sound is obtained when the jumpers are removed, an open circuit exists in the receiver bobbins. The magnet will therefore require rewinding.

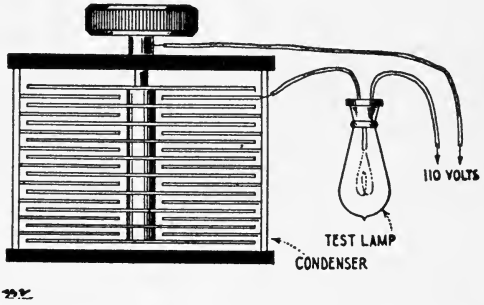

Fig. 332—Showing How to Locate a Short-Circuit in a Variable Condenser.

(*d*) *Fading of Signals During Reception.*—If the signals from a distant transmitter swing in and out periodically or irregularly, the trouble is likely due to leakage in either the transmitting or receiving aerials.

The transmitter antenna, for example, may swing into contact with mast stays during the rolling of the ship and thus divert the antenna current to earth. The remedy for this difficulty is clearly beyond the control of the receiving operator.

The leakage may also be found in the receiver aerial which may swing into contact with the ship's stays or other nearby conductors.

Loose contacts may exist in the antenna wires at the receiving station, the joints of which may not have been properly soldered. This would occasion very serious losses in the strength of signals. An imperfect connection in the telephone cords may cause the signals to disappear intermittently.

(*e*) *Weak Signals.*—If the signals are unduly faint, it may be due to one of several reasons:

(1) The receiving station may be nearly out of range of the transmitter;
(2) The transmitter may be operating at reduced power;
(3) The oscillation detector may be out of sensitive adjustment;
(4) The primary and secondary circuits of the tuner may not be in resonance with the transmitter;
(5) There may be a poor earth connection;
(6) The local battery may be exhausted;
(7) If a crystal rectifier is in use, the local current may be flowing in the wrong direction;
(8) The switch studs on the primary and secondary coils may make poor contact;
(9) The plates of one of the variable condensers may touch on certain positions of the condenser scale;
(10) The contact point on the crystal rectifier may have corroded.

247. Improvised Transmitters and Receivers.—In event of accident to a radio set, particularly in war times, an improvised transmitting or receiving apparatus may prove of the utmost value. It is a fact that a considerable number of parts of either transmitter or receiver may break down, but communication can still be maintained over reduced range.

Beginning with the transmitter, assume that the insulation of the primary or secondary windings of the oscillation transformer becomes defective. Two makeshift arrangements can be employed:

(1) The aerial tuning inductance can be used as an auto-transformer to transfer energy from the spark gap circuit to the antenna circuit;
(2) The spark gap can be connected in series with the aerial, i. e., employed as a plain aerial transmitter.

Figs. 333 and 334 show the connections for either arrangement. If the emergency apparatus is connected as in Fig. 334, the set must be operated at reduced secondary voltage because the antenna insulators with this connection are subjected to a severe strain which may destroy their insulation. A plain spark gap will not function as well at this point as a rotary gap because, owing to the small capacity of the antenna and the current output of the secondary winding, arcing will be obtained at the gap, resulting in imperfect oscillations. But with the rotary gap the arc is driven from the spark discharge and a clear spark tone is obtained.

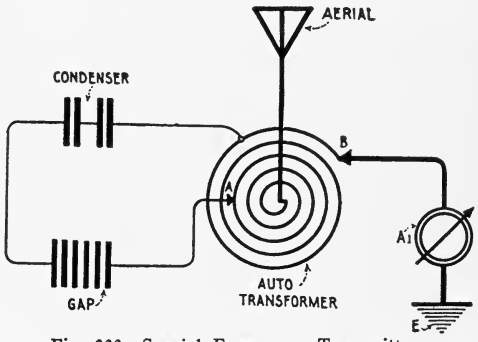

Fig. 333—Special Emergency Transmitter.

The connections of Fig. 333 are preferable. The primary and secondary circuits can be placed in exact resonance by the contact clips A and B. If insufficient inductance remains to tune the circuits to one of the standard waves (350, 450 or 600), the set should be tuned to whatever wave length the auto-transformer affords. A hot-wire ammeter as indicated at A-1 should be inserted in the circuit in order to obtain conditions of resonance.

An induction coil fed with a direct current storage battery can be connected as in Fig. 334. In this case the rotary spark gap would not be required. The induction coil would give a clearer spark note than a rotary gap because its current output is considerably less than that of a high voltage alternating current transformer.

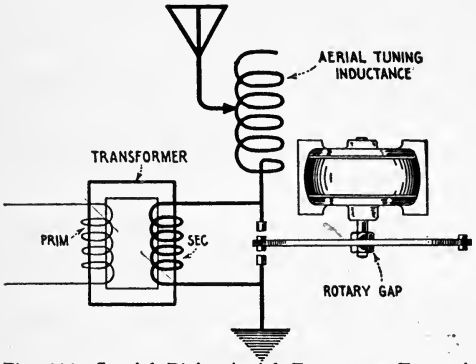

Fig. 334—Special Plain Aerial Emergency Transmitter for Use With Alternating Current Transformers

A temporary receiving apparatus can be devised as in Fig. 149, wherein a crystal rectifier D is connected in series with the antenna A and the aerial tuning inductance L-1. The head telephones P are shunted around the crystal. A receiver connected in this way will give fair results but the strength of signals will not equal that which can be obtained by the connections of Fig. 151, where a simple tuning coil A, B, is connected in series with the antenna circuit and employed as an auto-transformer. The contact clips C and A permit the primary and secondary circuits to be tuned to resonance and to the incoming wave and therefore increased strength of signals will result. If adjustment to longer waves than that afforded by the coil A, B, is necessary, another coil can be connected in series with the antenna circuit to increase the wave-length.

Temporary substitutes can be arranged for both the generator and motor field rheostats. Two or three or perhaps more sixteen-candlepower lamps can be connected in parallel and then in series with the field coils. The amount of field current can be regulated by turning on and off a number of lamps. In fact, a rheostat made up of a pair of metallic plates immersed in a wooden bucket filled with salt water can be employed for this purpose, but it would not prove as satisfactory as the lamp bank resistances.

A *temporary motor starter* can also be made of two metallic plates immersed in a wooden bucket filled with salt water. The plates should first be separated to the maximum distance and then the main D. C. line switch closed. As the motor increases its speed the plates can gradually be moved towards each other until, finally, they are placed in actual contact. Full voltage is then supplied to the motor armature.

As a final word of advice, the author cautions the radio operator in event of accident or emergency, to think carefully, proceed cautiously, and keep thoroughly in mind the fundamental circuits of the transmitter. If he will model his actions in accordance with the fundamental knowledge which he has obtained of radio telegraphy by careful study of this volume, his success is assured,

APPENDIX

SECTION A.

COMPLETE DATA FOR STANDARD MARINE COMMERCIAL SETS.

Type	Power Rating	Transformer Voltage Primary	Transformer Voltage Secondary	Capacity High Voltage Condenser (mfds.)	Antenna Current (Average) 600 met.	450 met.	300 met.
P-4	2 K.W. 500 cycle	350-140	12,500	.012 (600 met.) .006 (300 met.)	12 to 17 amp.	9-13	3 to 5
P-5	½ K.W. 500 cycle	350-120	14,500	.004	5½ to 8	5- 7	2 to 4½
E-2	½ K.W. 120 cycle	300-110	14,700	.01	5 to 7		1½ to 3
Composite 1	K.W. 60 cycle	110	18,000	.008	5 to 7		1½ to 3
Composite 2	K.W. 240 cycle	500	15,000	.008	5½ to 8		1½ to 3
P-9	¼ K.W. 500 cycle	300-110	15,000	.002	3 to 4		1 to 2

The foregoing data will familiarize the student with the power rating, electrical dimensions of the oscillation circuits, voltages, current, etc., of the various transmitters of the American Marconi Company, knowledge of which is essential to the practical operator.

SECTION B.

WAVE LENGTH RANGE OF MARCONI RECEIVING TUNERS.

Type 101 .....200 to 7,500 meters
Type 107a .....300 to 2,500 meters
Type 106 .....200 to 3,500 meters
Type 112 .....200 to 2,500 meters

SECTION C.

CORRECTION FACTOR FOR FORMULA.

(See Paragraphs 92 and 96)

$$\text{Wave length} = \frac{2\pi}{K} \times 9.5 \times \sqrt{L\,C}$$

Values of K corresponding to $\frac{L_2}{L_1}$

Where L_2 = inductance of loading coil at base,
L_1 = distributed inductance of antenna.

L_2/L_1	K	L_2/L_1	K
.0	1.57	1.5	.735
.05	1.51	2.	.65
.1	1.426	2.5	.59
.2	1.314	3.	.545
.3	1,219	4.	.475
.4	1.142	5.	.430
.5	1.078	6.	.40
.6	1.022	7.	.370
.7	.968	8.	.350
.8	.925	9.	.325
.9	.892	10.	.31
1.0	.855		

Values of K corresponding to $\frac{C_2}{C_1}$

Where C^2 = the capacity in microfarads of the short wave condenser
And C^1 = the capacity of the wireless telegraph aerial

C_2/C_1	K	C_2/C_1	K
4.0	1.7137	.90	2.0671
3.8	1.7200	.80	2.1111
3.6	1.7294	.70	2.1614
3.4	1.7373	.60	2.2179
3.2	1.7467	.50	2.2933
3.0	1.7577	.45	2.3247
2.8	1.7687	.40	2.3719
2.6	1.7812	.35	2.4347
2.4	1.7969	.30	2.4975
2.2	1.8142	.25	2.5604
2.0	1.8378	.20	2.6546
1.8	1.8661	.15	2.7489
1.6	1.8928	.10	2.8588
1.4	1.9242	.05	3.0002
1.2	1.9682	.00	3.1416
1.0	2.0294		

SECTION D.

INDUCTIVITY VALUES FOR DIFFERENT DIELECTRICS.

Dielectric.	*Inductivity Value, "K"*
Flint Glass, Double Extra Dense	10.10
Flint Glass, Very Dense	7.40
Flint Glass, Light	6.85
Flint Glass, Very Light	6.57
Castor Oil	4.80
Quartz	4.50
Porcelain	4.38
Mica Sheet, Pure	4.00 to 8.00
Glass, Common (Radio-Frequency)	4.21
Glass, Common (Low Frequency)	3.25 to 4.00
Sperm Oil	3.02 to 3.09
Olive and Neats-Foot Oils	3.00 to 3.16
Shellac	2.74 to 3.60
Gutta Percha	2.46 to 4.20
Sulphur	2.24 to 3.84
India Rubber, Pure	2.22 to 2.497
Turpentine	2.15 to 2.43
Hard Rubber Ebonite	2.05 to 3.15
Petroleum	2.03 to 2.42
Resin	1.77 to 2.55
Paraffined Paper	3.65
Paraffine Wax	1.9936 to 2.32
Beeswax	1.86
Paraffine, Clear	1.68 to 2.32
Celluloid	1.555
Manila Paper	1.50
Air at Ordinary Pressure, Standard	1.0000

SECTION E.

Conversion of $\lambda = \frac{V}{N}$ to $\lambda = 59.6 \sqrt{LC}$

If L be expressed in henries, C in farads, R in ohms, and N in cycles per second, Ohm's law for alternating current is expressed,

$$I = \frac{E}{\sqrt{R^2 + \left(2\pi N L - \frac{1}{2\pi NC}\right)}}$$

Where $2\pi N L - \frac{1}{2\pi NC} =$ is the expression for the reactance of a circuit containing inductance and capacity.

If $2\pi N L = \frac{1}{2\pi NC}$ we have resonance and therefore $I = \frac{E}{R}$ (See paragraphs 45 and 46).

If in any given oscillation circuit,

$$2\pi N L = \frac{1}{2\pi N C} \text{ then, evaluating,}$$

$$4\pi^2 N^2 L C = 1$$

$$\text{hence, } N^2 = \frac{1}{4\pi^2 LC}$$

$$\text{or } N = \frac{1}{2\pi \sqrt{LC}}$$

which is the fundamental equation for the frequency of an oscillation circuit. As shown in paragraph 91, if λ, the wave length, be expressed in meters, N in cycles per second and V the velocity of electrical waves = 300,000,000 meters per second, then

$$\lambda = \frac{300{,}000{,}000}{N}$$

$$\text{But } N = \frac{1}{2\pi \sqrt{LC}}$$

$$\text{hence } \lambda = \frac{300{,}000{,}000}{\frac{1}{2\pi \sqrt{LC}}} = 300{,}000{,}000 \times 2\pi \times \sqrt{LC}$$

The microhenry and the microfarad are more convenient units for practical oscillation circuits. Also 1 farad = 1,000,000 microfarads, and 1 henry = 1,000,000 microhenries. Hence, if the inductance and capacity are to be expressed in such units we must divide L and C by 1,000,000, then

$$\lambda = 2\pi \times 300{,}000{,}000 \times \sqrt{\frac{L}{1{,}000{,}000} \times \frac{C}{1{,}000{,}000}}$$

If we take 1,000,000 out from under the radical,

$$\lambda = 2\pi \times \frac{300{,}000{,}000}{1{,}000{,}000} \sqrt{L\,C} = 2\pi \times 300 \times \sqrt{L\,C}$$

If L be expressed in centimeters and 1 microhenry = 1,000 centimeters, then we must divide L by 1,000, hence,

$$\lambda = 2\pi \times 300 \times \sqrt{\frac{L\,C}{1{,}000}}$$

Taking out 1,000 under the radical (and since $\sqrt{1{,}000} = 31.62$)

$$\lambda = \frac{6.2832 \times 300}{31.62} \times \sqrt{L\,C}$$

or $\lambda = 59.6 \sqrt{L\,C}$

SECTION F.

The following series of questions bear directly and indirectly on the text of this volume, and are considered as a representative set for training students to become wireless operators. They were intended primarily to guide the instructor in outlining a complete instruction course, but will be valuable to the elementary student of radio as well.

PART I.

Magnetism.

Ques. (1) Describe a permanent magnet.
Ques. (2) Name the metals subject to magnetic influence.
Ques. (3) Show by diagram the resultant magnetic field between two north poles in proximity.
Ques. (4) Draw a diagram showing the resultant magnetic field between a north and south pole.
Ques. (5) What is meant by the earth's magnetism?
Ques. (6) Where is the north magnetic pole located?
Ques. (7) What is the behavior of soft iron and hard steel under the influence of a magnetizing force?
Ques. (8) Can all bodies be magnetized?
Ques. (9) What is said to be the direction of the lines of force in a magnet?

PART II.

Elementary Electricity and Simple Circuits.

Ques. (1) What is meant by a "positive" and a "negative" charge of electricity?
Ques. (2) Explain the application of the term "electromotive force" to an electrical circuit?
Ques. (3) Name four methods by which an electromotive force can be generated.
Ques. (4) Explain briefly the actions taking place within an ordinary chemical electrical cell.
Ques. (5) Show by diagram a series connection of electrical cells.
Ques. (6) Show by diagram a parallel connection of electrical cells; a series parallel connection
Ques. (7) Define the term resistance as applied to an electrical circuit.
Ques. (8) What is meant by an open circuit; a short circuit; a closed circuit?
Ques. (9) What is the unit for current pressure; current strength; resistance.
Ques. (10) Explain Ohm's law and apply it to an electrical circuit; work out a simple problem
Ques. (11) How is the power of a direct current measured?
Ques. (12) Work out a simple problem showing the joint resistance of three resistances of different values connected in parallel.
Ques. (13) Define a volt, ampere, ohm, watt and give the standard value of each.
Ques. (14) What metals offer the greatest resistance to the flow of an electrical current?

Ques. (15) Will pure water conduct electricity?

Ques. (16) Will impure and salt water conduct electricity?

Ques. (17) The voltage of a circuit in 100 volts; the resistance 10 ohms; what will be the strength of the current when the circuit is closed?

Ques. (18) How many amperes will a 100 watt Tungsten lamp draw on a 120 volt circuit?

Ques. (19) What power is consumed in applying a current at pressure of 220 volts to a circuit the resistance of which is 20 ohms.

PART III.

Electromagnetism—Electromagnetic Induction—Electrical Measuring Instruments—The Flow of Alternating Current.

Ques. (1) Describe the essentials of an electromagnet.

Ques. (2) Show by diagram the direction of the lines of force about a solenoid.

Ques. (3) Show by diagram the direction of the lines of force about the poles of a horse-shoe magnet.

Ques. (4) How may the strength of the magnet field about the poles of an electromagnet be regulated?

Ques. (5) Show by diagram the principle of electromagnetic induction.

Ques. (6) Explain the terms self-induction; mutual induction.

Ques. (7) Draw a circuit diagram of an induction coil with a magnetic interruptor and explain fully its operation.

Ques. (8) Show by diagram a step-up transformer; a step-down transformer; an auto transformer, an air core transformer.

Ques. (9) Show by diagram the construction and working of a galvanometer; a voltmeter; an ammeter; a wattmeter.

Ques. (10) Explain the use of a shunt in connection with an ammeter.

Ques. (11) Explain briefly how current is generated in a dynamo.

Ques. (12) Draw a diagram of a shunt-wound dynamo; a series-wound dynamo; a compound-wound dynamo.

Ques. (13) Show by diagram the differences in construction between a ring-wound armature and a drum-wound armature.

Ques. (14) How can the voltage of a dynamo be increased or decreased?

Ques. (15) What effect has an increase of the speed of the armature on the voltage of a dynamo.

Ques. (16) Show by diagram the construction of a field rheostat.

Ques. (17) Explain by diagram the function of a commutator in a dynamo; similarly the function of the collector rings.

Ques. (18) Explain briefly how an electric motor operates.

Ques. (19) State two methods by which the speed of a motor can be increased.

Ques. (20) Show the circuits of a differentially compound-wound motor.

Ques. (21) How may the frequency of a generator be increased?

Ques. (22) What is the frequency, in cycles per second, of the generators used in commercial wireless telegraphy?

Ques. (23) What effect has a series condenser on the flow of alternating current; the effect of a series inductance.

Ques. (24) What is meant by a resonant circuit?

Ques. (25) Give Ohm's law for alternating current (See Appendix).

Ques. (26) Explain the meaning of the term "power factor."

Ques. (27) How is the power of an alternating current measured?

Ques. (28) Show by diagram two practical electrical circuits.

Ques. (29) Explain how a fuse operates.

Ques. (30) What is meant by the effective value of an alternating current?

Ques. (31) How is the power output of a generator increased? Decreased?

Ques. (32) What is meant by a separately excited dynamo?

Ques. (33) How can you reduce the output of an alternating current dynamo without reducing the frequency?

Ques. (34) What is the frequency of a 30 pole generator revolving at a speed of 2,000 revolutions per minute?

Ques. (35) Define the terms cycle, frequency and amplitude.

Ques. (36) Show by diagram the difference between a step-up voltage transformer and a step-down voltage transformer.

PART IV.

Motor Generators and Automatic Motor Starters.

Ques. (1) Draw a diagram of a motor generator consisting of a differentially-wound motor and a simple shunt-wound generator.

Ques. (2) Draw a circuit diagram of a simple shunt-wound motor generator.

Ques. (3) Explain by diagram the Cutler Hammer type of motor starter; similarly the General Electric Company's hand starter.

Ques. (4) Give a complete circuit diagram of the automatic starter used in connection with the Marconi 2 K. W. 500 cycle panel set.

Ques. (5) Give a circuit diagram of a ½ K. W. automatic starter used in connection with the ½ K. W. 500 cycle Marconi panel set.

Ques. (6) Show the use of protective condensers on a motor generator; also protective resistance rods.

Ques. (7) How often must the bearings of a motor generator be oiled?

Ques. (8) How would you clean the commutator of a motor?

Ques. (9) How would you clean the brushes of a motor?

Ques. (10) Show how to locate an open coil in a motor amature.

Ques. (11) How would you locate a short circuit in one of the field coils of the motor generator?

Ques. (12) How would you detect a "ground" in the circuits of a motor generator?

Ques. (13) How would you know that the motor generator is running at normal speed?

Ques. (14) How would you repair a burned-out resistance coil in a motor starter?

Ques. (15) Show how to repair a burned-out field rheostat.

Ques. (16) Why are high frequency generators used in wireless telegraphy?

Ques. (17) Explain two different methods of controlling the speed of a motor?

Ques. (18) Why cannot the starting box be used as a speed controller?

Ques. (19) Why is a motor generator necessary for a wireless set?

Ques. (20) State several causes for a generator failing to generate while the motor is running.

Ques. (21) What effect has an increase of the speed of a motor generator?

PART V.

Storage Batteries.

Ques. (1) Describe the points of difference between the lead-plate storage cell and the nickel—iron-alkali storage cell.

Ques. (2) What is the fully charged and discharge voltage of each?

Ques. (3) Explain the use of a hydrometer?

Ques. (4) How often should a storage cell be placed on charge?

Ques. (5) What care is necessary from day to day to keep storage cells in first class condition?

Ques. (6) How can you locate an open circuit in a storage cell battery?

Ques. (7) What is the normal charging rate of a storage cell?

Ques. (8) What is the normal discharge rate of a storage cell?

Ques. (9) Explain the use of an overload circuit breaker in the charging circuit of a storage battery?

Ques. (10) Explain thoroughly the use of an underload circuit breaker in a storage battery charging circuit.

Ques. (11) Describe and explain the use of the amperehour meter.

Ques. (12) What causes sulphating and buckling of storage cell plates and how many it be prevented?

Ques. (13) State at least two methods by which the amount of charge of a storage battery may be determined?

Ques. (14) What is the essential difference between a primary and a storage battery?

Ques. (15) What will be the effect if a lead cell is discharged too rapidly; overcharged or charged in the wrong direction?

PART VI.

Condensers, Oscillation Generators and the Radio Transmitter.

Ques. (1) Define and describe the construction of a condenser.

Ques. (2) Describe three types of high-voltage condensers.

Ques. (3) Explain the points of difference in construction between a high-voltage and a low-voltage condenser.

Ques. (4) Draw a diagram showing a number of condensers connected in series; in parallel.

Ques. (5) If a condenser of .002 microfarads and another of .005 microfarads are connected in series, what is the resultant value of capacity?

Ques. (6) What is the capacity of a standard Marconi Leyden jar?

Ques. (7) Describe fully what takes place when a condenser discharges across a spark gap through a coil of wire.

Ques. (8) What is meant by the "time period" of an oscillation circuit?

Ques. (9) What are radio-frequent electrical oscillations?

Ques. (10) Explain the term "wave length" as applied to an oscillation circuit.

Ques. (11) If the capacity of the condenser in a closed oscillation circuit be increased, what effect has such increase upon the wave length?

Ques. (12) What effect has an increase of inductance in an oscillation circuit?

Ques. (13) Draw a diagram of an open oscillation or radiating circuit, and describe briefly the use of the apparatus included therein.

Ques. (14) How may an aerial be turned to radiate a wave longer than the natural or fundamental wave; how can it be tuned to radiate a wave shorter than the natural wave?

Ques. (15) Show by diagram four methods for setting an antenna into electrical oscillation.

Ques. (16) Show by diagram the distinction between damped and undamped oscillations.

Ques. (17) What is meant by the logarithmic decrement of the antenna oscillations?

Ques. (18) What is the purpose of a short wave condenser in a transmitting system?

Ques. (19) How can you tell if the condensers in the closed oscillation circuit of a transmitter are punctured?

Ques. (20) Explain the changes necessary to reduce the wave radiated by a transmitting set from 600 to 300 meters.

Ques. (21) Draw a complete fundamental circuit diagram of a radio transmitting set, and explain briefly the function of each part of the equipment.

Ques. (22) How are electromagnetic waves produced?

Ques. (23) Define the term resonance as applied to wireless telegraph circuits.

Ques. (24) How are two circuits placed in resonance?

Ques. (25) What is meant by the term spark frequency and upon what does the pitch or the tone of the spark depend?

Ques. (26) Define the term damping and show by diagram the apparatus that produces damped oscillations.

Ques. (27) Define a sharp wave; a pure wave; what is meant by the term broad wave?

Ques. (28) Are broad waves caused by highly damped or by slightly damped oscillations?

Ques. (29) How does coupling effect the sharpness of the wave?

Ques. (30) What is meant by the electrical length of a conductor in radio?

Ques. (31) Why are transformers used instead of induction coils in transmitting sets?

Ques. (32) Which is the most efficient transmitting set, a conductively or inductively coupled set?

PART VII.

Appliances for the Radio Transmitter.

Ques. (1) Name and describe four types of spark dischargers employed in radio telegraphy.

Ques. (2) State the advantages and disadvantages of each type.

Ques. (3) Suppose a secondary section of a high voltage transformer should burn out, how would you make a temporary repair?

Ques. (4) What are the essential points of difference in the construction of an open core and a closed core transformer?

Ques. (5) Give a detailed sketch showing the construction of an open core transformer.

Ques. (6) How would you synchronize a rotary spark gap?

Ques. (7) Describe the construction of a quenched gap.

Ques. (8) Describe a primary reactance coil and explain its use.

Ques. (9) Why is the short wave condenser of a transmitting set composed of several condenser jars connected in series?

Ques. (10) Show how the coupling of a transmitting set can be varied by means of a variometer?

PART VIII.

Aerials or Antennae.

Ques. (1) Draw a diagram of a flat top aerial; an umbrella aerial; a "T" aerial; a vertical aerial.

Ques. (2) Which of the four types is the most advantageous for commercial wireless telegraph working?

Ques. (3) At what point must the antenna or aerial wires be well insulated?

Ques. (4) What care is necessary to keep a ship's aerial in first class shape?

Ques. (5) How many wires are used in the usual Marconi ship aerial?

Ques. (6) Show by diagram a test for determining if the antenna insulators are leaking.

Ques. (7) How would you temporarily repair a leaking insulator?

Ques. (8) What is the natural wave length of the average ship's aerial?

Ques. (9) What is the capacity in microfarads of the average ship's aerial?

Ques. (10) What is the inductance in centimeters of the average ship's aerial?

Ques. (11) Can an aerial which has a natural wave length of 600 meters be operated at the wave length of 300 meters?

Ques. (12) What is the effect of increasing the number of wires of an antenna?

Ques. (13) How may an aerial be adjusted to radiate a sharp wave?

Ques. (14) How would you adjust an aerial, the natural wave length of which was 525 meters, to radiate a wave of 300 meters?

PART IX.

Receiving Apparatus.

Ques. (1) Draw a fundamental circuit diagram of an inductively coupled receiving transformer?

Ques. (2) Draw a diagram of the direct coupled receiving transformer.

Ques. (3) Show by diagram the circuit best suited to the carborundum detector.

Ques. (4) Draw a wiring diagram of a tuner suitable for the Marconi magnetic detector.

Ques. (5) Draw a diagram showing the construction of the Marconi magnetic detector, and explain its operation.

Ques. (6) Draw a circuit diagram of the tuning circuits for the Fleming valve detector; also for the Marconi multiple tuner.

Ques. (7) Show by diagram and explain fully how a telephone receiver operates.

Ques. (8) What is the use of a potentiometer in a receiving set?

Ques. (9) How would you adjust a receiving tuner for "broad" tuning?

Ques. (10) How would you adjust a receiving tuner for "sharp" tuning?

Ques. (11) Show by diagram how you would locate an open circuit in the coils of a receiving tuner.

Ques. (12) Show by diagram how you would locate a short circuit in a variable condenser.

Ques. (13) What is the use of the variable condenser in shunt to the secondary winding of a receiving transformer?

Ques. (14) What is the function of the fixed condenser in a receiving set?

Ques. (15) How would you adjust a carborundum detector to its maximum degree of sensitiveness?

Ques. (16) Explain a buzzer tester and how it operates.

Ques. (17) How could a receiving set be calibrated with a wavemeter?

Ques. (18) Explain the use of an aerial changeover switch.

Ques. (19) How do you protect the receiving apparatus from lightning discharges?

Ques. (20) Describe a variable condenser and its effect on the various circuits of a receiving set.

Ques. (21) What is the function of a crystalline detector in receiving signals?

Ques. (22) Why are high resistance telephones used in receiving sets?

Ques. (23) How do you protect a crystalline detector from the local transmitter?

Ques. (24) Why should the coupling be reduced, when receiving, to the point where the signals are just readable?

Ques. (25) Show how the primary and secondary circuits of a receiving tuner are adjusted to resonance?

Ques. (26) Show how the coupling may be decreased with a conductively coupled receiving set?

Ques. (27) Show by diagram the simplest possible apparatus for the reception of signals?

PART X.

Emergency Apparatus and Auxiliary Transmitters.

Ques. (1) Draw a fundamental diagram of the Marconi ten-inch coil auxiliary set.

Ques. (2) Draw a circuit diagram showing the charge and discharge circuits of a 60 cell storage battery of the type employed in connection with the 2 K. W. 500 cycle motor generator.

Ques. (3) When would you make use of the auxiliary transmitter?

Ques. (4) What is the maximum distance which an auxiliary set must be capable of transmitting according to the United States regulations?

Ques. (5) Draw a complete circuit diagram of the Electric Storage Battery Company's charging panel.

PART XI.

Practical Radio Measurements.

Ques. (1) Explain fully by diagram the method of tuning a transmitting set to the standard international waves.

Ques. (2) Show by diagram a test for determining the purity or sharpness of the radiated waves.

Ques. (3) Show by diagram and explain the method of tuning a transmitting set to resonance by an aerial ammeter.

Ques. (4) Show by diagram and explain how a receiving set can be tuned to a standard wave length.

Ques. (5) Show by diagram and explain the method of measuring the logarithmic decrement of a group of oscillations.

Ques. (6) Calculate the inductance of a coil of wire 12 inches in length, 3½ inches in diameter wound closely with No. 28 S. S. C. wire.

Ques. (7) Explain the apparatus for and the method of plotting a resonance curve.

PART XII.

Marconi Transmitters.

Ques. (1) Draw a circuit diagram showing the circuits of radio-frequency for the Marconi 2 K. W. 500 cycle panel set.

Ques. (2) How would you adjust the quenched spark transmitter of this set for a clear note and maximum flow of antenna current?

Ques. (3) Explain the functioning of the wave-length changing switch in the Marconi 2 K. W. 500 cycle set.

Ques. (4) State the condenser capacity of the 2 K. W. 500 cycle panel set; the ½ K. W. 500 cycle panel set; the 1 K. W. 60 cycle composite set.

Ques. (5) How do you change from the quenched spark gap to the rotary gap in the new panel sets?

Ques. (6) How do you adjust the acceleration of the starter arm on the automatic starter?

Ques. (7) If upon closing the starting switch, the automatic starter failed to work, where would you look for the trouble?

Ques. (8) Explain fully the steps necessary to tune the 2 K. W. panel transmitter for the maximum flow of antenna current at the three standard waves.

Ques. (9) How do you change the length of the radiated wave on the panel transmitter?

Ques. (10) How would you synchronize a rotary spark gap of a Marconi set and adjust it for clear tones?

Ques. (11) How may the power input of the panel sets be reduced?

Ques. (12) State fully the steps necessary to disassemble a quenched spark gap, clean it and put it together again.

PART XIII.

Marconi Direction Finder.

Ques. (1) Show the fundamental circuits of the Marconi direction finder complete.

Ques. (2) Show how the position of a radio station may be located.

Ques. (3) How may the direction finder circuits be preadjusted to standard wave lengths?

Ques. (4) Explain how the direction finder is tuned to a transmitter.

PART XIV.

Undamped Oscillation Generators.

Ques. (1) Show by diagram the circuits of the arc generator.

Ques. (2) How are continuous waves generated?

Ques. (3) Show by diagram the difference between continuous and discontinuous waves.

Ques. (4) Describe briefly the principle of the Goldschmidt alternator.

Ques. (5) Explain by diagram the system for increasing the frequency of a radio-frequency alternator, by means of transformers.

PART XV.

Receivers for Undamped Oscillations.

Ques. (1) How can undamped oscillations be made audible at the receiving station?

Ques. (2) Explain the operation of the tikker, the heterodyne and the regenerative beat receiver.

Ques. (3) Describe Marconi's method for making undamped oscillations audible with a crystal rectifier detector.

LOCATION OF TROUBLE.

The questions herewith presented do not bear directly upon the text in this volume. It is expected that they will be used by the Instructor in charge who will explain the various methods of locating trouble in detail.

Ques. (1) If the storage cells of a radio set gas violently while charging, what is the cause?

Ques. (2) If the hydrometer indicates that the specific gravity of a storage cell is too low (when the cell has been fully charged), how would you proceed to bring gravity up to normal.

Ques. (3) If one cell of a storage battery unit did not show full voltage, how would you proceed to bring it to normal voltage?

Ques. (4) How would you remedy sparking at the brushes of a motor?

Ques. (5) If the motor refused to start, what might be the cause of the trouble?

Ques. (6) If the release magnet of a starting box burned out, how would you keep the motor in running order?

Ques. (7) If one or more of the resistance coils of a starting box burned out, how could the motor be started?

Ques. (8) Show by diagram a method of constructing a salt water rheostat for temporary use.

Ques. (9) Show how a bank of lights may be used for the same purpose?

Ques. (10) How many lamps would be required in a circuit (as a lamp bank resistance) to allow 30 amperes to pass?

Ques. (11) If a dynamo refused to generate, what might be the trouble?

Ques. (12) Show by diagram a test to determine trouble in either the primary or secondary windings of a transformer?

Ques. (13) If the spark of a radio transmitter discharges irregularly, what might be the cause of the trouble?

Ques. (14) What is the effect if the spark gap of a transmitter is opened too wide?

Ques. (15) If an entire bank of high voltage condensers should puncture, how would you manage to maintain communication?

Ques. (16) What would be the effect if the synchronous rotary spark gap accidently gets out of synchronism?

Ques. (17) If one of the condensers in a transmitting set breaks down, what would you do to place the set in working order?

Ques. (18) How may a receiving tuner be adjusted to decrease the effects of static?

Ques. (19) How would you test for an open circuit in the coils of a receiving tuner?

Ques. (20) If a telephone tests open when the tips of the cords are connected to the terminals of a battery, what might be the trouble and how can you remedy it?

Ques. (21) If during the reception of signals they weaken with the roll of the ship, what might be the trouble and how can it be remedied?

Ques. (22) If your antenna blew down at sea so that only a portion of the wire remained, how would you rig up the transmitting apparatus for communication?

Ques. (23) Show by diagram a test for determining a leak in the antenna circuit. Show the connections for this test and name one remedy for it.

INTERNATIONAL REGULATIONS AND U. S. LAWS AND REGULATIONS

(Prepared by H. Chadwick.)

Ques. (1) What is the International Distress signal?

Ques. (2) What is the distance requirement for auxiliary apparatus?

Ques. (3) Are you compelled to exchange wireless telegraph traffic with ships and stations regardless of the system used?

Ques. (4) State the law regarding the use of unnecessary power.

Ques. (5) What is the rule in regard to the disposal of traffic through the nearest coast station?

Ques. (6) Has the sender of a message the right to designate the routing of his message?

Ques. (7) What are the penalties for violations of the U. S. Radio Laws?

Ques. (8) What are the international normal wave lengths for a ship station?

Ques. (9) What other wave lengths may be used by ship stations and when?

Ques. (10) What wave lengths are standard for commercial radio traffic?

Ques. (11) What shall the charge for radiograms comprise?

Ques. (12) May operating practice be indulged in aboard ship?

Ques. (13) What is the international regulation regarding the use of superfluous signals?

Ques. (14) What is the U. S. law in regard to the secrecy of messages?

Ques. (15) What are the U. S. requirements for an auxiliary equipment; also the international requirements?

Ques. (16) From whom are charges for radiograms generally collected? State exceptions.

Ques. (17) What code of signals is used for wireless telegraph communication?

Ques. (18) Does the coast or ship station determine the order of working?

Ques. (19) By what method would you call a station?

Ques. (20) When would you use the "CQ" call?

Ques. (21) After calling a station three times without result, how long must you wait before repeating a call?

Ques. (22) Give the following signals:

(a) The attention signal.
(b) The termination of a message.
(c) The "go ahead" signal.

Ques. (23) What is the rule in regard to the transmission of long messages?

Ques. (24) According to the International Regulations how often may a message be repeated before being cancelled?

Ques. (25) What signal designates the conclusion of correspondence?

Ques. (26) Give as many of the International abbreviations as possible.

SECTION G.

THE RELATION OF SPARK GAP ACTION TO COUPLING AND PURITY OF THE RADIATED WAVE.

Frequently much confusion arises in the mind of the radio student as to the existence and cause of two waves being radiated by a wireless telegraph transmitter. It should be understood that a transmitter in proper adjustment for practical use never radiates a double wave, but in fact should always radiate a single wave, of wave length and damping normal to the antenna circuit as adjusted, but with any transmitter two waves will appear if the spark gap is not in proper condition. The remedy in event of the latter is to restore the gap to its proper working qualities or to loosen the coupling at the oscillation transformer.

When the spark discharges across the gap it acts as a trigger to start the primary circuit into oscillation and the stored energy of the condenser will be transferred to the antenna circuit until in the course of a few oscillations (the number decreasing as the coupling is closer), the voltage in the primary circuit becomes so low that the spark will no longer discharge across the gap; the primary oscillations will then cease. The exact value of the minimum voltage for non-sparking will depend upon the resistance of the gap.

The resistance of the spark gap always increases as the oscillating current decreases and if it were not for the burnt gases which exist in the immediate vicinity of the discharge gap, the original resistance would be restored at the end of the first half oscillation. Since there is a lag in the cooling and dissipation of the hot gases, this does not occur, but if the gap is properly cooled, that is the electrodes do not get too hot, the resistance becomes so high after a few oscillations that the reduced voltage of the condenser cannot maintain the spark. In other words, the spark is quenched and the oscillations of the two circuits will take the form shown in Fig. 118, that is, after a few swings of the primary circuit, the primary oscillations will cease and the antenna circuit will oscillate at its natural frequency and decrement.

These are the precise actions taking place in a properly adjusted radio transmitter, no matter what type of spark gap is employed, if the electrodes are clean and smooth, the ventilation adequate and the coupling of the oscillation transformer is not too close.

The rate at which the gases in the gap are dissipated or the non-conducting qualities of the gap restored, determines how close the coupling can be made without interfering with the quenching of the spark. If the coupling is so close that the reaction of the secondary upon the primary not only does not extinguish the spark but transfers energy back to the primary then the spark will not be quenched until the energy of the entire system has fallen to a low enough value to allow the high resistance of the gap to be restored. The complex oscillations shown in Fig. 109 will then result and the effect of two waves radiated will be produced. If the spark quenches after one or two of the "beats" shown in Fig. 109 and the antenna still has energy to be radiated, then investigation with a wave meter may show three apparently different wave lengths radiated.

In all spark gaps there is a tendency toward "arcing," that is, for the spark to be followed by passage of the power current across the gap. This will prevent the restoration of the high resistance—the spark will not quench.

The plain open spark gap without artificial means of cooling requires very careful adjustment and reduction of coupling to give proper operation, that is freedom from double wave emission. Unless the spark voltage is carefully adjusted the tendency toward arcing is difficult to control and the action tends to be irregular. The use of special cooling means, such as a series of gaps or an air blast enables good quenching to be obtained with sufficient regularity to give a clear spark tone.

The improved forms of spark gap, such as the rotary and so-called "quenched gap" (i. e. multiple plate gap) have the advantage of giving good quenching with a tighter coupling and hence a smaller number of oscillations in the primary circuit. This, of course, means higher efficiency and greater antenna current for a given input because less energy is lost in heat in the primary circuit.

With equal perfection of apparatus there is little to choose between these gaps so far as tightness of coupling without failure to quench is concerned, as is evidenced by the recent Marconi sets which are provided with both forms of gap.

If either of these gaps gets into bad condition, or becomes overheated, double waves will be radiated, showing that the spark has ceased to be extinguished after the energy has been transferred to the antenna. This can only be remedied by restoring the gap to normal condition or loosening the coupling. If the gap is in particularly bad condition, loosening the coupling will not prove effective.

Proper adjustment of the spark gap is very difficult to obtain unless the power supply circuit is properly designed. It may be said that no form of spark gap will quench reliably if the source of current supply is effectively short circuited by the spark. The power circuit must have sufficient inductance or resistance so that the voltage applied to the condenser will fall when the spark passes, otherwise arcing will be produced, quenching will not take place and a complex wave emission will result.

SECTION H

IMPORTANT REMARKS ON THE DESIGN, ADJUSTMENT AND USE OF RECEIVING TRANSFORMERS.

According to the grade of service for which it is employed, the receiving oscillation transformer may have either a secondary coil with a fixed number of turns, without a shunted condenser; a secondary having a variable number of turns, without a shunted condenser; or either type of secondary with a shunted variable condenser. In practically all types of transformers, variable coupling between the primary and secondary is provided.

The most efficient secondary circuit is probably the simple non-variable coil, minus a shunt variable condenser, provided the coil is so constructed, that, with detector, stopping condenser and telephones connected, it's natural period of oscillation is that of the signal being received.

Such a circuit has often been called an *untuned circuit,* meaning that it does not possess a frequency varying condenser or inductance. By some this has been assumed to mean a non-oscillatory circuit and the high resistance of the detector has been stated to be the reason for so calling it. The error of this view has often been pointed out and Kolster has shown (proceedings Institute Radio Engineers, Vol. 1, page 25) that such a circuit gives a perfectly normal resonance curve of fairly small decrement and hence is oscillatory and resonant to a particular frequency.

If resonance curves of such a circuit be taken, it will be found that the behavior of the circuit varies with the coupling and with the setting of the detector. For a given adjustment of the crystal, the shape of the resonance curve, and the location of the maximum point will vary with the coupling. The curve is broader for close coupling.

If resonance curves be taken for a fixed loose coupling, but with a number of different crystal settings, it will be found that the highest points in the curves do not coincide, but occur at different wave lengths for different crystal adjustments and that the curves will also differ in shape, some being sharp and others broad.

The reason why such a circuit is oscillatory is that the coil has distributed capacity which is equivalent to a condenser shunted across the inductance. This capacity is increased

by the capacity of the connected elements. The reason why it is resonant is that its inductance and capacity are made such that its natural time period is the same as that of the signal to be received. A small shunted capacity tends to impress a high potential on the detector for a given amount of received energy and hence a loud signal is obtained. As its capacity can be made quite small, such a simple non-variable coil secondary is found to be a very efficient receiver when it's time period agrees with that of the signal to be received.

By varying the coupling and the crystal adjustment, therefore, such a circuit can be made to tune broadly or fairly sharply and be put in resonance for waves varying over a sufficient range of wave length to meet the needs of a certain class of service.

For the reception of signals over a wider range of wave lengths, the use of coils having a variable number of turns enables the natural period of the secondary circuit to be adjusted to cover such range by varying the number of turns. A coil of variable inductance, however, may be less efficient owing to the possible consumption of energy due to the flow of oscillations in the unused turns.

Where efficient reception and also high selectivity is required over a large range of wave lengths, as, for example, from 300 to 3,000 meters, a coil having a variable number of turns and a shunted variable condenser is employed. The loudest signals would usually be obtained with such a receiver by either disconnecting the condenser or using it at a small value of capacity and properly adjusting the coupling, a moderately close (but not the closest) coupling being employed. Where, however, there is trouble from interference, better reception will be had by further loosening the coupling, reducing the inductance and increasing the capacity of the shunted condenser. By this means, with an efficient detector, signals of very small difference in wave lengths may be separated or "tuned out."

For best results, however, the maximum capacity of the shunted variable secondary condenser should not be large and it's minimum or "zero" capacity should be as small as possible.

The effect of the "over-hanging" or unused turns may be minimized by disconnecting such turns from the used portion and this is the purpose and function of the "end turn switches" with which the most complete present-day receivers are provided, as described in Chapter 9.

SECTION I.

The correct phase relation between the currents of the main receiving aerial and the balancing out aerial in Marconi Duplex System is obtained by grounding the balancing aerial at the end nearest to the local transmitter, the coupling coil (for the balancing aerial) being connected in the circuit at a considerable distance from the earthed end.

SECTION J.

The wiring diagram of the automatic motor starter for the Marconi ½ K. W. 500 cycle motor generator shown in Figure 255 is identical with Figure 74, but the general lay-out more closely duplicates the actual position of the elements as installed. The notations "1st step" and "2nd step" refer to the solenoids which actuate the armatures for opening and closing the power circuit. The "1st step" opens and closes one side of the circuit to the motor armature, and the "2nd step" shunts a single resistance unit composed of two coils which are in series with one side of the armature circuit.

The small resistance coils to the right of the "1st step" and "2nd step" are automatically thrown in series with the solenoids when the starter is in full running position. They protect the magnet windings from overheating.

The ½ K. W. starter is now fitted with an extra contact which closes the circuit to the generator field winding when the motor attains full speed.

The student should note that the dynamic brake resistance is connected in series with the series field of the motor and the armature and that it is connected in the circuit by the lever of the "1st step" solenoid.

In modern Marconi motor generators the student will have little difficulty in making the necessary reconnections should it become necessary to disassemble the set. All binding posts are stamped with numbers and all connecting leads have a stamp on the terminal lug. If lug No. 8, for instance, is connected to binding post No. 8, and so on, proper wiring is assured.

INDEX

Page

AERIALS 116
advantages or disadvantages, various types of 121
Bellini-Tosi 123
Bradfield insulator for 124
change-over switch for 114, 115
deck insulator for 123, 124
directional 121
"dummy" 127
effective inductance and capacity, measurement of 214
flat top 119
for direction finder 256
function of 116
function of receiving 129, 130
fundamental considerations, in design of 118
fundamental wave length of "T" 119, 120
induction of current in direction finder 258
installation of ship's 124
inverted "L" type 119
loading inductance for 117
standard Marconi ship 123
table of wave lengths of 121
"T" type 119
test for insulation of 312
tuning elements for receiving 130
tuning inductance for 109
umbrella 119
vertical 118
wave length of 117
Alexanderson Alternator 268
Alternating Current
effective value of 41
lag and lead of 40
Alternating Current Dynamo 26
Alternator 22, 23
Alexanderson, high frequency 268
diagram of, fundamental 25
Goldschmidt radio frequency 270, 271
test for 310
Ammeter 43
hot wire 45
thermo 46
with shunt 43
Ampere hour
meter for measurement of 72
unit as applied to storage cells 70
Amplifier
microphonic 169, 170
radio-frequency 163, 164, 284
telephone 167, 168
vacuum valve 163
Antenna
decrement of 126
definition of 87
Apparatus
testing 309
Arc Transmitters 265, 266
Navy type 266
signalling with 267
Armatures
drum 31
dynamo 31
locating troubles in 313
motor 31, 32
ring 31
Armature Windings 31
construction of 56
development of 31, 32
lap 32
open circuit in 313
wave 33
ring 31
Atmospheric Electricity 171
Audibility Meter 217
Auxiliary Transmitters 179
adjustment of 180, 181
Marconi type 179
requirements of 179
tuned coil type 180, 181

BATTERIES 5
primary 5
secondary 6
Breaker, Circuit
underload 72

Page

Buzzer
excitation systems 167
for adjusting detector 167
tuned tester for direction finder 258
CAPACITY 332
at radio frequencies, measurement of 208, 209
distributed, effects of 164
electrostatic 36, 37
equation for 38
formula for standard of 208
measurement of 207, 208
Carborundum Detector
action of 137
adjustment of 139, 140
theory of action 137, 138, 139
tuning circuits for 135
Care of Motor Generator 65
Cargo Transmitting Set, Marconi ¼ K. W. 248
Cells
primary 5, 6
secondary 6, 7
grouping of 9
in series 9, 10
in parallel 10, 11
in series parallel 11, 12
internal resistance of 10
Charging Panels
Electric Storage Battery Company 181, 182, 185
General instructions for 187
Marconi auxiliary 180, 182
Choking Coils
high frequency 110, 111
Circuits
branch 13
closed oscillatory 84
divided 13
examples of 13
open oscillatory 84
reaction of coupled 95
receiving radio 129
Closed Circuit Transmitter
calibration of 200
Coils
calculation of inductance of 209, 211, 213
choking 110, 111
measurement of effective inductance of 209
measurement natural oscillating period of tuning 207
induction 46
interrupter for induction 48
Compass, Wireless 255
Condensers
battery of 82
capacity of 37
complete cycle of events in the discharge of 83
connections for 81
high potential 81, 110
high potential, test for 312
how to charge 82
locating short circuit in 316
low potential 81
motor generators, protective type for 65
short wave 109
simple 37
Conductors 4
partial 4
Continuous Waves
receivers for 277
transmitters for 264
Converter, Rotary 57, 58
Coupling
capacitive 95
coefficient of 95
conductive 94
direct excitation 93
electrostatic 95
inductive 93, 94
"tight" or "close" 96
"tight" and "loose" 219, 220
transmitter, determination of 195
Currents
alternation of 24
by chemical battery 5, 6
by dynamo 22
classification of 4
electric 4
induced 19

Page

of audio frequency, definition of..... 80
of radio frequency, definition of.....80, 81
strength and quantity of..... 7
thermo-electric 46

DAMPING OF OSCILLATIONS..... 90
calculation of..... 93
measurement of logarithmic decrement of 200, 201, 202
theory of.....83, 90, 91, 92, 93

Decrement
of antenna..... 126
calculation of..... 127

Decremeter
calculation of the decrement of..... 203
Kolster 204

Detectors, Oscillation
carborundum 135
classification of.....140, 141
electrolytic 158
holders for..... 140
magnetic, Marconi.....148, 149, 150
primary cell..... 159
three element valve..... 159
valve, Fleming..... 141
zincite-bornite 140

Diagrams, Wiring
Alexanderson alternator..... 206
arc transmitters..... 265
auxiliary charging panel.....184, 185
beat receiver..... 281
direction finder..... 259
earthing system high power stations..... 305
Glace Bay transmitter..... 291
Goldschmidt alternator..... 270
heterodyne receiver 279
Joly-Arco alternator..... 272
lay out aerials high power stations....298, 299
Marconi duplex scheme..... 289
Marconi undamped receiver..... 286
Marconi ½ K. W. 120 cycle transmitter.. 243
Marconi 2 K. W. 500 cycle transmitter.. 224
Marconi ½ K. W. 500 cycle transmitter 235, 236
Marconi ¼ K. W. 500 cycle transmitter.. 251
Marconi 1 K. W. 60 cycle transmitter.... 241
measurement of decrement..... 196
Navy "beat" receiver..... 283
pliotron oscillator..... 276
radio-frequency amplifier..... 284
standard receiving tuners....134, 152, 155, 149
standard transmitter..... 98
tuned coil..... 181
tuning of transmitters.....190, 191, 192, 193

Dielectric Constants
table of..... 320

Direction Finder..... 255
aerials for..... 256
circuit of.....257, 258
direction of forces within..... 260
general instructions for operation.....260, 261
Marconi, description of..... 255
tuned buzzer tester for..... 258
to find direction of radio station..... 262

Dynamo 22
alternating current..... 26
compound 27, 28
determination of frequency of..... 24
direct current..... 27
magnetic field of..... 24
principle of.....22, 23, 24
principle parts of..... 22
shunt, series and compound..... 27
simple type of.....22, 23
strength of field of..... 24

Dynamotor 57

EARTH CONNECTION.....124, 125
at trans-oceanic stations..... 125

Edison Storage Battery..... 79
charge and discharge of..... 79

Electric Current..... 14

Electric Meters..... 42

Electric Motor..... 29

Electric Waves.....87, 88
determination of length of..... 89
length of..... 88

Page

standard, for ships aerials..... 96
wireless 88
velocity of..... 88

Electrical Circuits.....48, 49
examples of..... 49

Electrical Cells, Grouping of..... 8

Electrical Devices, Current Output and Voltage Output of..... 15

Electrical Horsepower..... 14

Electrical Resistance..... 8

Electrical Resonance..... 85
importance of..... 188
indicators of..... 190

Electrical Units..... 14
practical definition of.....14, 15

Electrical Work.....13, 14

Electricity
atmospheric 171
frictional 5
static 5

Electrification 5
positive 5
negative 5

Electrodes 6

Electrolyte 6

Electromagnetism 16

Electromotive Force..... 4
by chemical action..... 5
by dynamo..... 22
by friction..... 5
by thermo couple..... 47
effect of counter..... 30
induced value of..... 22
production of..... 5
unit for..... 5

Electrostatic Capacity..... 37

End Turns, receiving tuner..... 164
switch for..... 165

FREQUENCY
determination of..... 24
Dynamo 24
Meter 44

GALVANOMETER
Construction of..... 42

Generator
arc, for undamped oscillations..... 265
compound 28
how to determine polarity of..... 76
motor 51, 52, 53, 54, 55, 56
series 28
shunt 27

Glace Bay—Clifden Transoceanic Stations.... 291

Goldschmidt Radio-Frequency Alternator..270, 271

HELIX 17

Heterodyne Receiving System..... 278

High Power Stations
condensed list of..... 306
Marconi transoceanic..... 292
of the United States..... 305

Horsepower
electrical 14
mechanical 14

Hydrometer 69

INDUCTANCE
calculation of.....209, 210, 211, 212, 213
correction factor for calculation of....211, 213
measurement of effective..... 209
measurement of mutual..... 216
of an aerial.....214, 117, 121
unit of..... 21
variation of a radio-frequency..... 165
variometer 166

Induction
electromagnetic 19
magnetic 1
mutual 19
self 20

Page

Insulators 4
Bradfield 124
deck 123, 124
JOLY ARCO STEP-UP FREQUENCY TRANSFORMER 273
KEYS
transmitting 115
Key Control, G. E. Co.'s type 268
MAGNET
permanent 2
temporary 2
Magnetism
natural 1
electro 3
location of trouble 328
Magnetic
circuit 3
flux 1
induction 1
permeability 2
polarity 1
poles, laws of 3
retentivity 2
Magnetic Field 3
about two parallel conductors 17
strength of 17, 18
Marconi
balancing out aerials 291
continuous wave receiver 286
continuous wave transmitter 274, 275
directional aerial 292
duplex radio system 290
transoceanic radio telegraphy 288
transoceanic stations 292
tubular mast 299
Measurement
of coupling 195
of decrement 200, 201
of electrostatic capacity 207, 208
of high voltages 220
of inductance of a coil 209
of oscillating period of a coil 207
of receiving transformer 205, 206
of strength of incoming signals 216, 217
of wave length 191, 192, 193
Meters
ammeter 43
audibility meter 217
frequency meter 44
galvanometer 42
hot wire meters 45, 46
radio frequency meters 47
voltmeter 43
wavemeter 188, 189
wattmeter 43, 44
Motor, Electric 29
counter E. M. F. of 30
field of 30
principle of 29
reversal of 29
torque of 30
with differential field winding 30
Motor Generators 51, 52, 53, 54, 55, 56
care of 65
complete circuit of, with hand starter 63
compound generator type of 53
construction of 51
Crocker-Wheeler type of 54, 55, 56
differential motor type of 54
faults of 313
testing for grounds in 313
how to remove armature of 2 K. W. 500 cycle Marconi 66
how to remove armature of ½ K. W. 500 cycle Marconi 240, 241
regulation of 53
shunt wound 32, 53
troubles of 315
Motor Starter 58
automatic ½ K. W. Marconi type of 60, 61
burned out 315
Cutler-Hammer type of 59
General Electric type of 60
2 K. W. automatic 61, 62, 63, 64, 187
2 step ½ K. W. automatic 61
Muffler Box
test for 312

Page

OHMS LAW 11
examples of 11, 12
Open Circuit Transmitter
calibration of 199
Oscillations
damping of 83
determination of frequency of 84
effect of resistance on 84
frequency of 84
generator of 84
highly damped group of 90
logarithmic decrement of Electrical 90
methods of exciting, in an aerial 93, 94, 95
of feeble damping 90
variation of frequency of 85
Oscillation Constant 86
Oscillation Transformer
adjustment of coupling of 107
inductive type 107, 108
pancake type 108
square coil type 109
variometer type 108
Oscillator
open circuit 86
Pliotron 276
PANEL TRANSMITTERS, AMERICAN MARCONI TYPE 223
general instructions for 253
Phase Displacement of alternating currents 41
Polarity
Magnetic 1
Power Circuits
examples of 48, 49
Power Factor 41
Protective Condensers for Motor Generator 64
Protective Resistance Rods for Motor Generator 64
Questions on
aerials 325
appliances for transmitter 325
condensers 324
elementary electricity 322
electromagnetism 323
emergency apparatus 326
International Regulations 328
Marconi Direction Finder 327
Marconi Transmitters 327
practical radio measurements 326
receiving apparatus 326
receiving of undamped oscillations 327
storage batteries 324
undamped oscillation generators 327
RADIATION OF ELECTRIC WAVES 87, 125
Radio-frequency current, generation of 80, 81
Radiogoniometer 255, 257
Radio Measurements, Practical 189
Radio Transmitter 79
appliances for 101, 115
explanation of 99, 100
fundamental circuit of 97
numerical values for 100
spark dischargers for 101, 102, 103, 104, 105, 106
Marconi panel types 223
general care of 309
Range
calculation of transmission 127
Reactance
capacity 38
inductance 39
regulators 114
Receiver
balanced crystal 172
capacitively coupled 134
directly coupled 133, 134
electrostatically coupled 134
impedance of telephone 131
inductively coupled 132, 133
simple radio 132
telephone magneto 131
Receiving Sets
design of 330

Page

improvised 316, 317
long distance 306
Marconi balanced crystal 172
Marconi-Fleming valve 141
Marconi multiple tuner 148
Marconi type 101 154
Marconi type 106 151
Marconi type 107-a 144
Marconi Universal 157
range of 319
trouble in 315
wave length 319

Rectifier 131

Relays
Brown 170
microphonic 169

Resistance, Electrical 8
examples of 9
radiation 126
relative, of metals 9
specific 8
standard of 9
unit of 9

Resonance Curves, Plotting of...196, 197, 198, 199

Resonance, Electrical 40, 85
indicators of, for wavemeters 191
resonance in complete radio systems 135

Rheostat Field 26
construction of 57

Rotary Converter 51

SELF INDUCTION

coefficient of 21
unit of 21

Signals, Radio
audibility meter for strength of 217
chart showing variation of 218
fading of 316
measurement of strength of incoming..216, 217
weak 317

Solenoid 17

Spark Discharge
analysis of 83

Spark Dischargers
action of 329
adjustment of note of 106
adjustment of quenched 247
details of quenched 230
Non-synchronous 102, 103
plain 101
quenched 105
synchronous 103, 104
synchronous, 240 cycle 248
troubles of quenched 313

Static Electricity 5, 171

Starters, Motor 58
automatic 60, 315, 331
burned out 315
temporary 318

Storage Batteries 67
ammeter and underload circuit breaker for charging circuit of 72
acid spray of 77
capacity of 69
charging process of 68
charging when voltage of charging source is less than that of 74
determination of state of charge and discharge of 76
Edison type of 79
electrolyte of 69
Exide type of, general instructions 78
fundamental actions of 68, 69
fundamental facts of 70
general construction and action of 68
how to determine charging resistance 71
lamp bank resistance for 72
lead sulphating of 69
level of electrolyte of 77
necessity for 67
overcharge of 74
portable chloride type of, general instructions 77
specific gravity of 69
use of ampere hour meter for 72, 73

Switch
aerial change-over 114
end turn 165
type I, aerial, Marconi 173, 174
receiving 167
response of 131
testing the 316

Tikker Detector 278

Tone Wheel Detector 284

Transformers, A. C 33
closed core 113
high voltage 112
high voltage test for 312
magnetic circuit of 35
magnetic leakage gap for 113
open core 35, 112
oscillation 107
radio-frequency 36
receiving radio 132, 133
step-down 34, 49
step-up 34

Transmitters 223
aerial current of 253
auxiliary 179
checking up of 310
complete data for Marconi 319
improvised 317
Marconi panel type of 223
Marconi type P-4 .... 225, 226, 227, 228, 229
Marconi type P-5 234, 235, 236, 237, 238, 239, 240
radio 80
reduction of power of 253
the faults of 310
type E-2, details and circuits of 244, 245
type E-2, instructions for tuning of 246
type E-2, Marconi 244
type P-4, tuning of 231, 232, 233, 234
type P-4, adjustment of 229, 230, 231
type P-5, description of 234, 235, 236, 237, 238, 239
type P-5, Marconi adjustment of 239, 240
type P-9, description 249
type P-9, Marconi ¼ K. W 248
type P-9, tuning of 252
1 K. W. 60 cycle non-synchronous 240
1 K. W. 60 cycle, description of 241
1 K. W. adjustment of 242
1 K. W. installation of 242

Troubles
location of 308

Tuned Coil Emergency Transmitter 180, 181

Tuners, Receiving 129
balanced crystal 172
calibration open and closed circuits simultaneously 206, 207
calibration of secondary and primary..205, 206
end turns of 164
English Marconi Universal 157
general advice for manipulation of 176, 177
inductively coupled, adjustment of 135
Marconi multiple 148, 149, 150
Marconi type 101 .... 154, 155, 156
Marconi type 106 .... 151, 152, 153, 154
Marconi type 107-a 144, 145, 146, 147
selectivity in 136, 137
theory of adjustment of 136, 137
Marconi type 112 .... 174, 175, 176

Tuning 188
aerial inductance for 109, 110
by hot wire ammeter 194
continuously variable inductance for 109
general instructions for radio transmitter. 191
measurement of the closed circuit 193
measurement of the open circuit 192
measurement of radiated wave 193, 194
of the 2 K. W. 500 cycle panel transmitter 194, 195

Tuning Records
Marconi 220
U. S. Government 221

UNDAMPED OSCILLATIONS

Alexanderson alternator for 268
arc generator of 265
beat receiver for 280, 281
Goldschmidt alternator for 270, 271
heterodyne system for 278, 279
Joly-Arco system for 273, 274

Page

Marconi's system for.....274, 275
Marconi's receivers for..... 286
methods of generating.....264, 265
Navy beat receiver for..... 283
receivers for..... 277
tikker receiver for..... 278
tone wheel for..... 284
transmitters of..... 264

Units, Electrical.....14, 15
of current.....7, 8
of electromotive force.....7, 14
of power.....14, 15
prefixes of..... 15
of quantity.....8, 15
of resistance.....9, 14

VALVE, OSCILLATION
adjustment of..... 161
amplifier circuits for..... 163
as combined detector, amplifier and beat receiver 280, 281
as source of radio-frequency oscillations.. 280
audio-frequency repeater for..... 161
circuits for Fleming..... 143
Fleming 141, 142
operation of 3 element valve..... 160
radio-frequency amplifier..... 163
regenerative circuits for..... 162
repeater circuit for..... 161

Page

three element..... 159
U. S. Navy circuits for..... 283

Variometer
for receiver..... 166
for transmitter..... 108

Voltmeter 42

WATTMETER 43, 44

Wavemeter
as a source of high-frequency oscillations. 205
calibration of.....214, 215
measurement of natural wave length by 190, 191
resonant adjustment of.....190, 191
uses of..... 190

Waves
damped 81
distortion of..... 121
method of changing length of..... 97
Naval standard length of..... 97
standard commercial wireless.....96, 97
sustained 264
sustained, apparatus for....265, 266, 267, 268
undamped 81

Wave Lengths
commercial standard..... 96
correction factor for.....319, 320

MEMORANDA

MEMORANDA

MEMORANDA

Other Books by the Same Author

HOW TO CONDUCT A RADIO CLUB

New Edition—Revised and Enlarged

Completely revised and enlarged, this useful volume is once more presented to the great and growing field of radio students. It is a complete guide for the formation of a radio club or class, and an excellent manual for experimenter's shop work. It also contains a wealth of information that is indispensable to the radio student in commercial, navy, or army work.

Tutors in army and navy schools and commercial radiotelegraphic schools will find in this volume instruction of an advanced character in the design of certain parts of radiotelegraphic equipment.

The opening chapters review the amateur situation, showing what is expected of the amateur operator, and the requirements of a first-class amateur station. Another chapter is devoted to instruction in the telegraphic code, showing how to wire up a code practice table for the production of artificial radio telegraphic signals for one or more students at a time. Various modifications of buzzer practice systems are described.

The text matter rapidly leads into more advanced experiments, complete data being given, for instance, for the construction of a wavemeter, and instructions for its use under all conditions. This includes tuning, the measurement of inductance capacity of a wireless telegraph aerial, and general methods of calibration. The measurement of the logarithmic decrement is treated in a way easily understood by the beginner. The design and working drawings for several types of low power transmitters are included, covering the construction of a quenched spark gap and apparatus associated therewith.

The receiving apparatus and detectors of wireless telegraphy are treated at length, practically every type of detector in use being described, together with the circuits best suited for the operation of each.

The two-electrode and three-electrode vacuum valves are described and every known circuit for their use is shown. This includes complete cascade amplification circuits, regenerative and beat receivers, heterodyne receivers, etc.

Long distance receiving apparatus for the reception of long waves which will permit the recording of signals over 6,000 miles are shown by diagram and by a complete set of dimensions.

The experimenter is shown how to construct a receiving tuner for any range of wave lengths; how to design a receiving tuner specifically for the reception of Arlington time signals; how to make use of the balancing-out aerial for the elimination of interference; one chapter is devoted to the construction of variometers in various forms.

The amateur is told how to construct a simple wireless telephone by use of a battery of vacuum valve oscillators. Numerous experiments are described, showing how to get the best out of a given transmitter and receiver.

This book will be found to be a first-rate reference work for students and amateurs. It presents the latest developments in the wireless art up to and including the latter half of the year 1917.

8vo. 6½x9½. 134 Illustrations. Price 50c net.

With One Year's Subscription to the Wireless Age $2.00

HOW TO PASS U. S. GOVERNMENT WIRELESS LICENSE EXAMINATIONS

Fifth Edition Largely Revised and Extended **142 Questions and Answers.**

CONTENTS—Explanation of Electrical Symbols—Definitions of Electrical Terms—Part I. Transmitting Apparatus—Part II. Motor Generators—Part III. Storage Batteries and the Auxiliary Set—Part IV. Antenna or Aerials—Part V. Receiving Apparatus—Part VI. Radio Laws and Regulations—Part VII. General Information Concerning Operator's License Examinations—Practical Equations for Radio Telegraphy—Equations for Ordinary Power Work.

PRICE 50c net.

With one year's subscription to THE WIRELESS AGE, $2.00.

WIRELESS PRESS, Inc., 25 Elm Street, New York, N. Y.

RADIO TELEPHONY

By Alfred N. Goldsmith, Ph. D.

Fellow of the Institute of Radio Engineers
Member of the American Institute of Electrical Engineers
Director of the Radio Telegraphic and Telephonic Laboratory
of the College of the City of New York

This complete text on radio telephony is intended for radio engineers, radio electricians in the Navy, men in the Signal Corps and especially men in the Aviation Service who handle radio equipment. Amateurs and others who desire to be clearly informed concerning this newest and most interesting branch of electric communication will want this book.

It is written in clear style, and presupposes very little knowledge of radio. The text deals largely with the practical aspects of radio telephony and its future. It is copiously illustrated with wiring diagrams and previously unpublished photographs of "wireless telephone" apparatus.

IT IS THE ONLY BOOK TREATING THE SUBJECT OF RADIO TELEPHONY IN ALL ITS ASPECTS.

Among the unusual features of the book are a description of how radio telephony was carried on over a distance of more than 5,000 miles; an illustrated description of an airplane radio telephone set; an illustrated description of a large ship radiophone set; numerous illustrated sections on smaller ship "wireless telephone" transmitters; land station radio telephone sets of all sizes.

Another noteworthy feature is a description of the method of transmitting a radio telephone message to a ship at sea, or across continent or ocean, including the number of persons involved. This material is in dialogue form and so worded as to require no previous knowledge of the subject.

Among the topics treated are: the construction and operation of the Armstrong oscillating audion circuits; the construction and use of bulb amplifiers; the construction of the great alternators of the Alexanderson and Goldschmidt systems and how they are controlled, especially for radio telephony.

The book is very complete, practically every aspect of radio telephony being covered in detail. There are over 400 separate topics listed in a carefully prepared index.

8vo. 256 pages. 226 illustrations.
Full cloth, stamped in gold. Price $2.00 net.

Specialists in Wireless Literature

Wireless Press, Inc.

25 ELM ST.
NEW YORK, N. Y.

MILITARY SIGNAL CORPS MANUAL

By Major J. Andrew White

Chief Signal Officer of the American Guard, Member Institute of Radio Engineers, Acting President National Wireless Association

This manual, the first of its kind and the only complete work on the broad subject of army signaling, is indispensable to those responding to the call to the colors. Primarily prepared for Signal Corps men, it is a necessity for the proper understanding of apparatus and the tactical employment of troops and equipment.

Officers of infantry and artillery will find the volume of great utility, a proper conception of the enormously enlarged Service of Information being indispensable to all commissioned men.

Its contents include administration and government of military units—tactics of the division on the march, at rest and in engagement—function and operations of the Signal Corps and its relation to the line of the army—drill instruction, mounted and dismounted, for telegraph companies, radio and outpost companies, and battalions of Signal Corps—signaling by telegraph, heliograph, night lantern and flags, radio and service buzzer—camp and field telephones and their uses—radio apparatus of the Signal Corps—scouting, patrolling and tactical employment of field lines.

Prepared with the full co-operation and approval of the Chief Signal Officer, U. S. Army.

CONTENTS

Part I.—Organization

The Signal Corps, An Auxiliary Branch of the Army. The Signal Corps' Relation to the Line of the Army. Aircraft. Government and Administration. Military Courtesy. Personnel. Proficiency Test for Companies of Signal Troops.

Part II.—Drill Instruction

General Principles. Definitions. Commands and Signals. School of the Soldier. Physical Training. School of the Squad. Instruction with Arms. The Company Dismounted. The Soldier Mounted. Elementary Collective Instruction Mounted. Field Signal Troops. The Wire Company. The Radio Company. The Outpost Company. The Field Battalion. Telegraph Signal Troops. The Telegraph Company. The Telegraph Battalion. Base Line Signal Troops. Depot Signal Troops. Ceremonies. Reviews. Inspections. Funeral Escort. The Standard. The Guidon. Manual of the Saber.

Part III.—Technical Instruction and Apparatus

Telegraphy and Telephony. The Voltaic Cell, Ohm's Law, and Primary and Secondary Batteries. The Camp Telephone and the Buzzer. Induction Telegraph Set. Radio-telegraphy. Radio Apparatus of the Signal Corps. Visual Signaling Equipment. Flag Kits. The Heliograph. The Acetylene Lantern. Technical Equipment of Personnel.

Part IV.—Transmission

Transmission of Military Information. General Instructions for Army Signaling. The American Morse Code. The International Morse or General Service Code. Instruction in Garrison. Visual Stations. Telegraphy. Visual Signaling in General. Signaling by Flag, Torch and Lantern, or Beam or Searchlight (without Shutter). Signaling with Heliograph, Flash Lantern, or Searchlight, (with Shutter). The Ardois System. Signaling by Two-Arm Semaphore. Signaling by Hand Flags. General Instructions for Locating and Operating Visual Stations. Letter Codes. Telegraph Code Books and Ciphers. Conventional and Preconcerted Signals with Rockets, Bombs, Small Arms and Guns. Flag Signals by Permanent Hoist. Emergency Signals. Conventional Telephone Signals.

Part V.—Field Service

Signal Troops in the Field. Reconnaissance, Patrolling and Scouting. Military Map Reading. Signal Troops in Field Service. Field Lines. Camps. Company Guard Mounting. The Signal Corps and General Coast Defense. Coast Defense Information in War.

Cloth. 588 pages. 260 illustrations. Price $1.50 net.

Specialists in Wireless Literature

Wireless Press, Inc.

25 ELM ST. NEW YORK, N. Y.

Solve the problem of self-instruction in the International Morse Code

BY USING THE NEW

MARCONI-VICTOR

Wireless Code Instruction Records

The Marconi Institute in collaboration with The Victor Talking Machine Company
has prepared a complete set of Code Instruction Records for private study.

A series of progressive lessons provides elementary and advanced instruction for men in all divisions of Government and commercial service.

Records made by a *code expert* of years of practical experience.

Officially approved by The Marconi Wireless Telegraph Company of America.

Brief Summary of Records

Lesson No.	Title
1	International Morse Code and Conventional signals.
2	International Morse Code, etc., continued.
3	Easy sentences and periods.
4	Easy sentences and periods.
5	Marconi Press, South Wellfleet station.
6	Messages with static interference.
7	Press with static.
8	Messages with erasures, etc.
9	Press with interference from second station.
10	Groups of figures.
11	Ten-letter dictionary words.
12	Ten-letter code words.

A set of six double-faced *Victor Records,* complete in a container with instruction manual, specially priced at $5.00.

WIRELESS PRESS, Inc.
25 Elm Street, NEW YORK CITY

THE WIRELESS AGE

offers a series of

Practical Training Courses

in the following branches, of which there is urgent need.

Aviation—

Conducted by HENRY WOODHOUSE, Governor of the Aero Club of America

Principles and theory of flight—nomenclature, assembly, rigging,—care and repair of aeroplanes—operation and care of aeronautical engines—principles of general and cross-country flying—reconnaissance, map reading, signaling and co-operation with military bodies—radio for aircraft and its uses—machine gunnery and bombing from aeroplanes.

Signal Corps Work—

Conducted by Major J. ANDREW WHITE, Chief Signal Officer, Junior American Guard

Function and operations of the Signal Corps and its relation to the line of the army—drill instruction, mounted and dismounted, for telegraph companies, radio and outpost companies, and battalions of Signal Corps—signaling by telegraph, heliograph, night lantern and flags, radio and service buzzer—camp and field telephones and their uses—radio apparatus of the Signal Corps—scouting, patrolling and tactical employment of field lines.

Wireless Telegraphy—

Conducted by ELMER E. BUCHER, Instructing Engineer, Marconi Wireless Tel. Co.

Code practise—elementary electricty and magnetism—primary and secondary batteries—electrical units and circuits—electromagnetism—electromagnetic induction—the dynamo, motor and motor generator—transmitting and receiving apparatus—transformers—tuning—modern wireless sets—measurements—undamped oscillation transmitters and receivers—regenerative receiving circuits.

Navigation—

Conducted by Capt. F. E. UTTMARK. Principal, Uttmark's Nautical Academy

Compass work—details of Mercator's chart—coastwise and ocean chart sailing—keeping the log book—the taffrail and chip logs—dead reckoning—care and use of the sextant and chronometer—correcting altitudes and declination—latitude by meridian observation of the sun—selection and use of logarithms—various kinds of time—longitude by solar sights—deviation of compass by sun azimuths, and by terrestrial ranges.

These courses are conducted exactly as lecturers give them to their classes.

The printed diagrams and charts take the place of regular blackboard exercises, and the text, covering description, principles and application, progresses step by step through elementary instruction, apparatus and practical operation.

The cost of similar instruction in regular training schools would be—

Aviation	**$75.**
Signal Corps Work	**$75.**
Wireless Telegraphy	**$65.**
Navigation	**$100.**
Total	**$315.**

Offered in THE WIRELESS AGE for $2.00.

SPECIAL CLUB RATES FOR CLASSES, ASSOCIATIONS AND SOCIETIES

If you are enlisted, eligible for enlistment or interested in any young man who would be benefited by a knowledge of the fundamentals of any one of these branches of skilled and remunerative work

SUBSCRIBE TODAY

Issued Monthly. $2.00 per year. Foreign postage 48c extra.

WIRELESS PRESS, Inc.

25 ELM STREET **NEW YORK**

UNIVERSITY OF CALIFORNIA LIBRARY
BERKELEY

Return to desk from which borrowed.
This book is DUE on the last date stamped below.

ENGINEERING LIBRARY

APR 4 1950

MAR 2 8 2002

LD 21–100*m*-9,'48(B399s16)476

735783

TK5741
B85
1918

Engineering
Library

UNIVERSITY OF CALIFORNIA LIBRARY

STRATFORD & GREEN
BOOKSELLERS
643-644 SO. MAIN ST.